TRACTOR SERVICE MANUAL FOR GARDEN TRACTORS
S/N 737,625 - 799,999

SECTION 1. ENGINE

SECTION 2. CHASSIS

SECTION 3. DRIVE SYSTEMS AND HYDRAULICS

SECTION 4. ATTACHMENTS

SECTION 5. SAFETY

ENGINE

Contents

	Page
Engine Removal—16 H.P. Briggs & Stratton	1-2
Engine Removal—17 H.P. Twin Cylinder—Kohler	1-3
Engine Removal—20 H.P. ONAN	1-4
Seat Switch and Safety Start Switch	1-6
Engine Removal—15 & 17 H.P. Diesel	1-7
Power Unit Disassembly For 15 H.P. Diesel	1-20
Overheating of Diesel Engine	1-28
Engine Removal—10 & 12 H.P. Kohler	1-29
Engine Removal—18 H.P. and 20 H.P. Kohler	1-37

ENGINE REMOVAL
16 H.P. BRIGGS & STRATTON

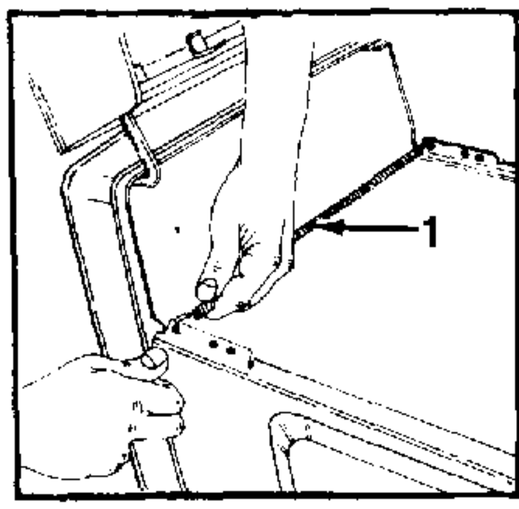

FIGURE 1.

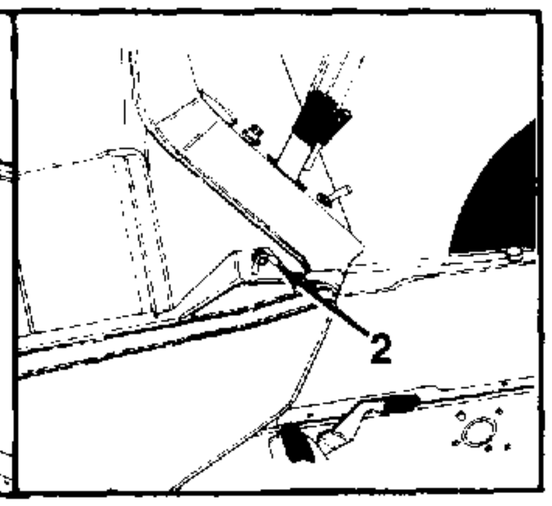

FIGURE 2.

1. Spring
2. Wing Nut

1. Disconnect the battery ground cable.
2. Raise the hood and remove the engine side panels secured by wing nuts and a spring.
3. Disconnect the headlight wiring and remove the hood and grille as an assembly.

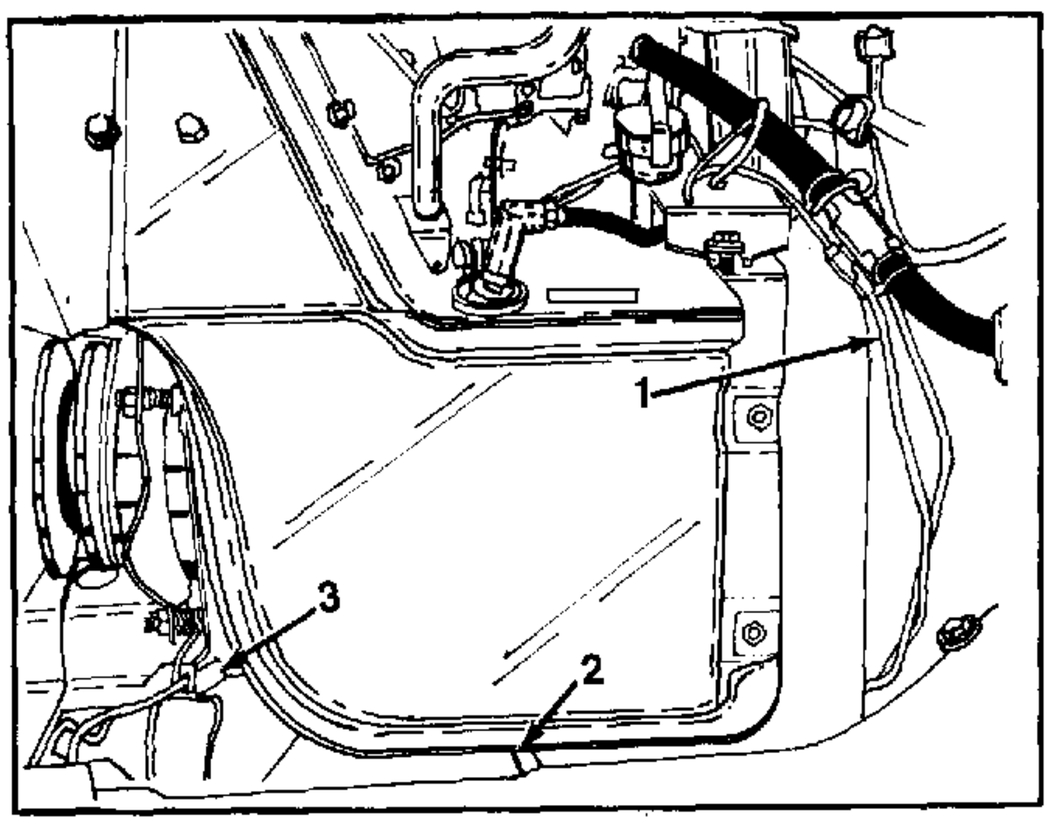

FIGURE 3.

4. Disconnect the alternator—regulator wire.
5. Disconnect the starter wire and the PTO clutch wire.
6. Remove the air cleaner assembly.

1. Alternator Regulator Wire
2. Starter Wire
3. PTO Clutch Wire

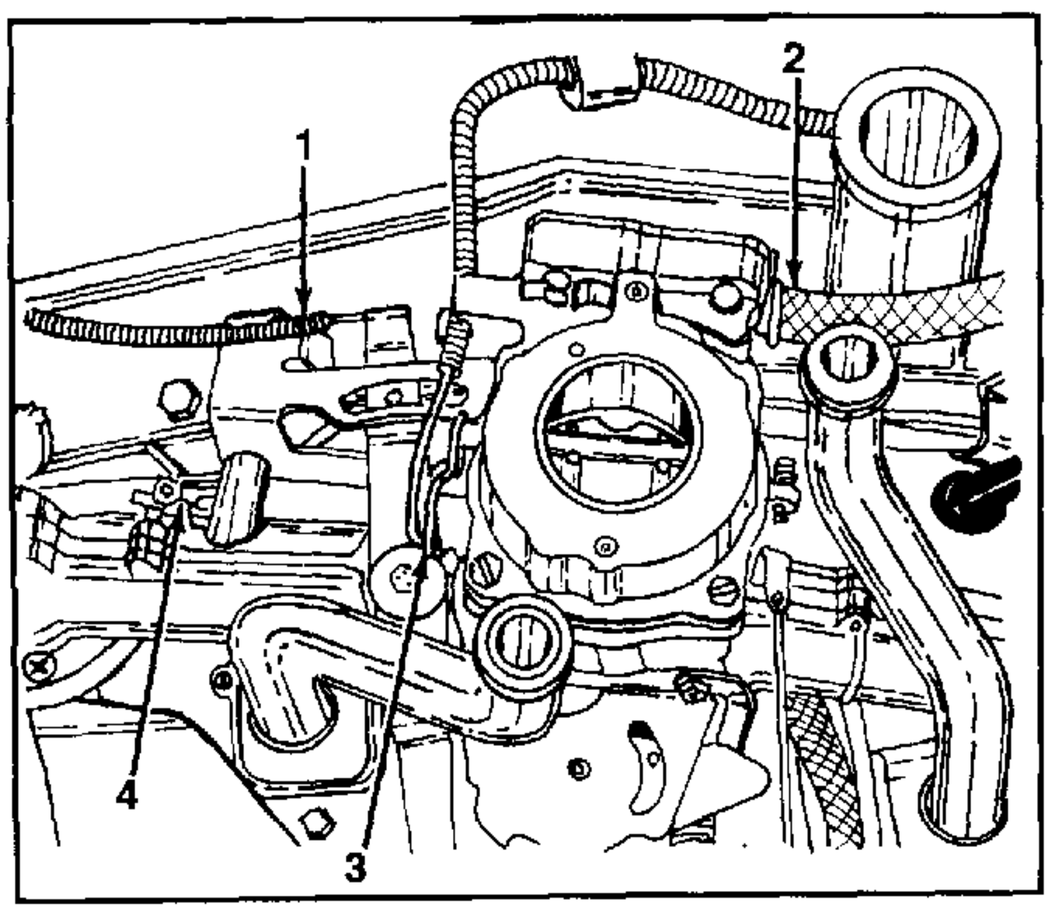

FIGURE 4.

7. Disconnect the choke and throttle cables. Disconnect the engine shut-off wire.
8. Shut off the fuel and disconnect the fuel line at the carburetor. Be sure to plug the line.

1. Throttle Cable
2. Fuel Line
3. Choke Cable
4. Engine Shut-Off Wire

9. **582 Special Only**—Remove the two capscrews securing the flex coupler to the engine.
10. Remove the engine mounting bolts and slide the engine forward.
11. Using a suitable hoist and sling, lift out the engine.

NOTE: For specifications and overhaul procedures, refer to Service Manual GSS-1498.

INSTALLATION

Installation is the reverse of the removal procedure with special attention to the following:

1. Torque engine mounting bolts to 27-34 N•m (20-25 ft. lbs.).
2. Check the engine oil level. Fill to the proper level. Refer to the operator's manual for the recommended oil.
3. Adjust the following as necessary:
   a. Carburetor
   b. Governor
   c. Ignition timing

ENGINE REMOVAL
17 H.P. TWIN CYLINDER KOHLER

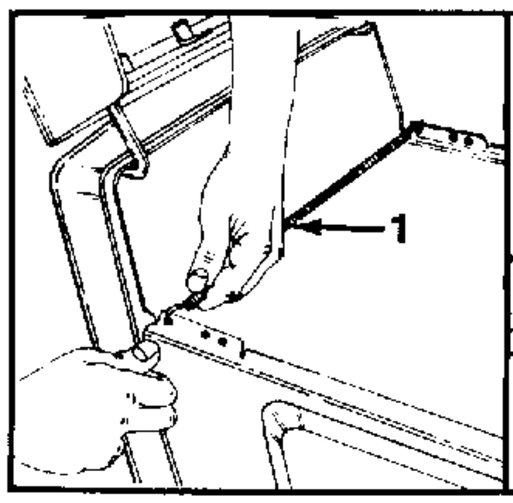

FIGURE 5.

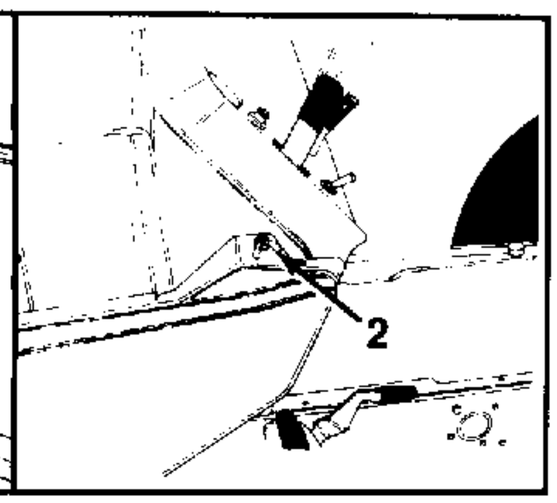

FIGURE 6.

1. Spring
2. Wing Nut

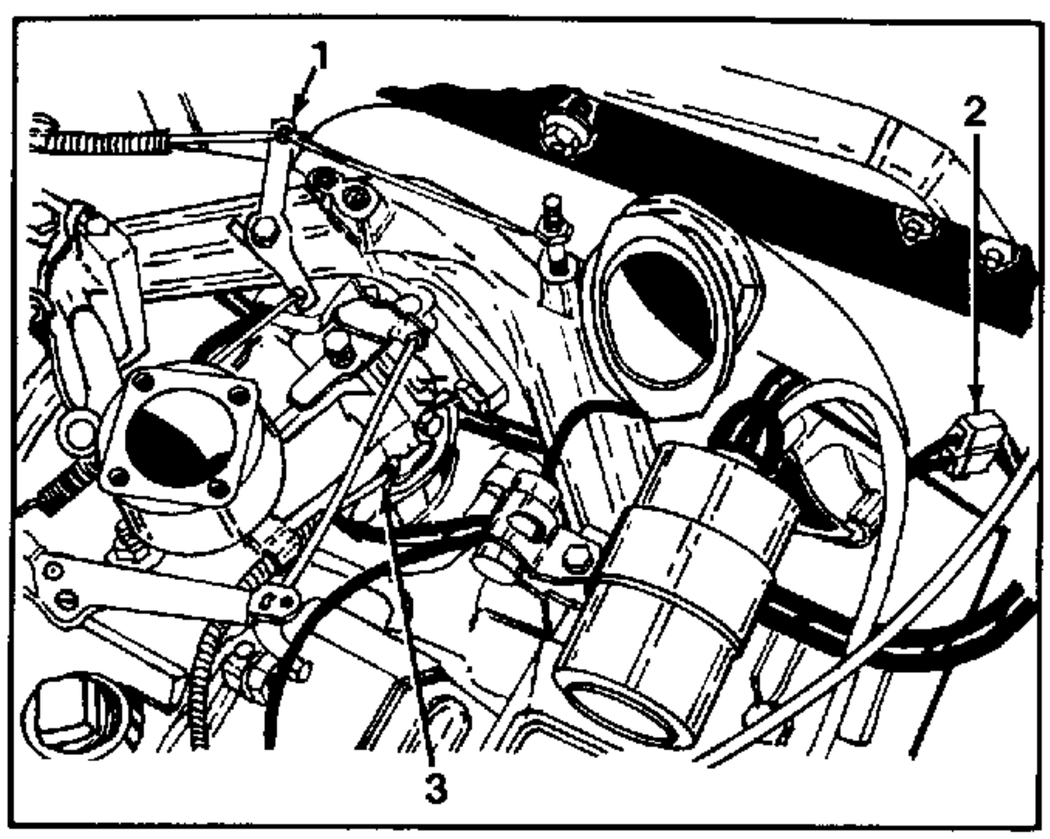

FIGURE 7.

REMOVAL

1. Disconnect the battery ground cable.
2. Raise the hood and remove the engine side panels secured by wing nuts and a spring.
3. Disconnect the headlight wiring and remove the hood and grille as an assembly.
4. Remove the air cleaner assembly. Disconnect the choke cable, throttle cable and wire harness.
5. Disconnect the PTO clutch wire and the starter wire (LH side of engine).
6. Shut off the fuel and disconnect the fuel line at the tank. Be sure to plug the line.

1. Throttle Cable
2. Wire Harness
3. Choke Cable

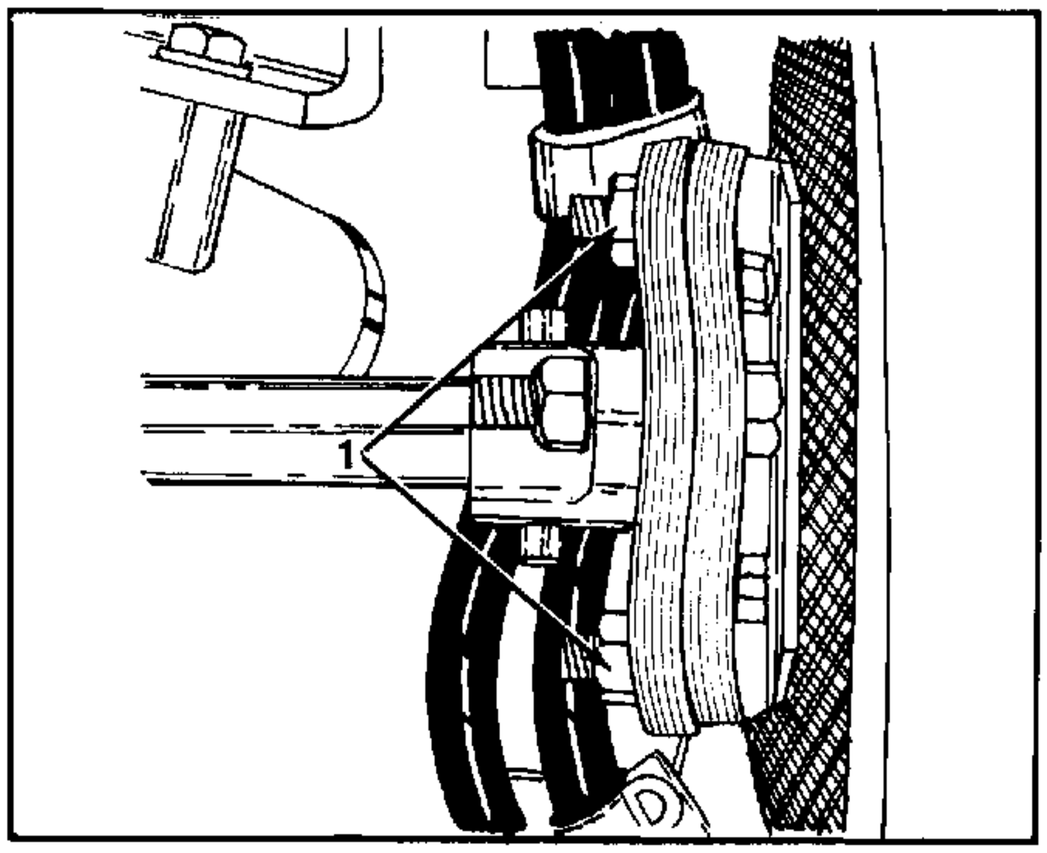

FIGURE 8.

7. Remove the nuts securing the front flex coupler to the flywheel flange.
8. Remove the engine mounting bolts. Using a suitable hoist and sling, remove the engine.

NOTE: For specifications and overhaul procedures, refer to Service Manual GSS-1495.

1. Flywheel Flange Nuts

INSTALLATION

Installation is the reverse of the removal procedure with special attention to the following:

1. Torque engine mounting bolts to 27-34 N•m (20-25 ft. lbs.).
2. Check the engine oil level. Fill to the proper level. Refer to the operator's manual for the recommended oil.
3. Adjust the following as necessary:
   a. Carburetor
   b. Governor
   c. Ignition timing

ENGINE REMOVAL
20 H.P. ONAN

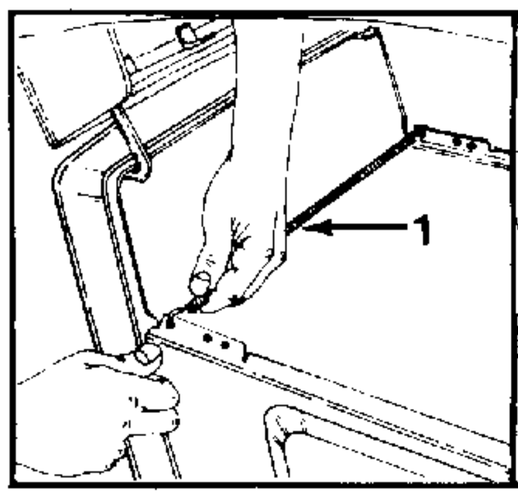

FIGURE 9.

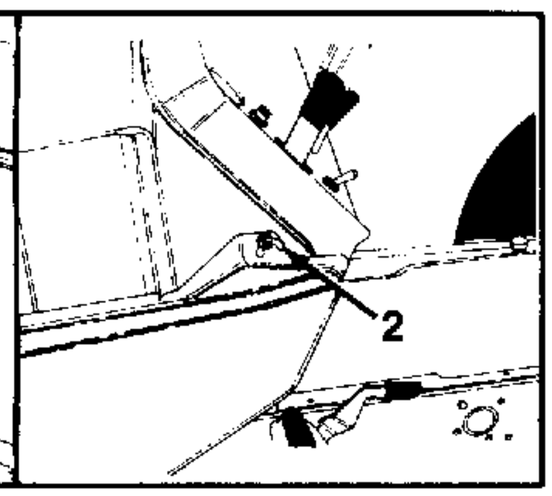

FIGURE 10.

1. Spring 2. Wing Nuts

REMOVAL

1. Disconnect the battery ground cable.
2. Raise the hood and remove the engine side panels secured by wing nuts and a spring.
3. Disconnect the headlight wiring and remove the hood and grille as an assembly.

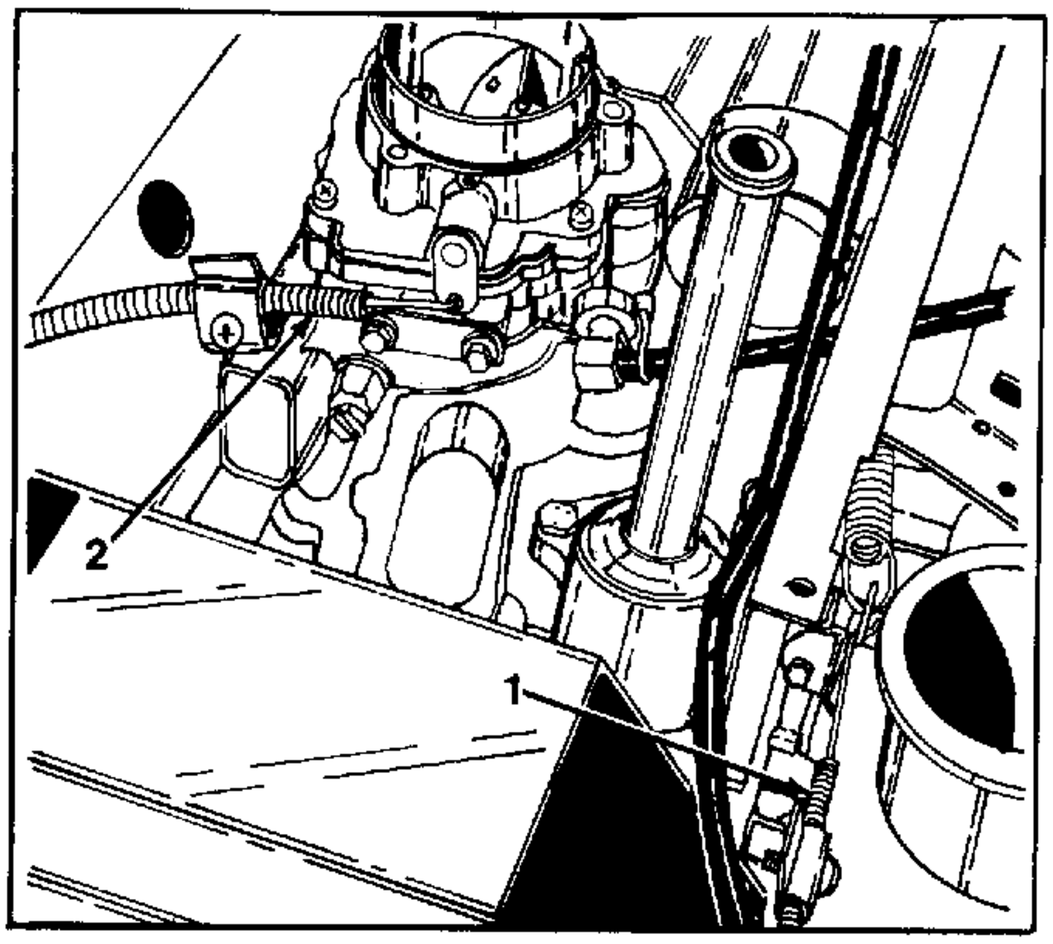

FIGURE 11.

4. Disconnect the PTO clutch wire and the starter wire.
5. Remove the air cleaner assembly and disconnect the choke and throttle cables.

1. Throttle Cable
2. Choke Cable

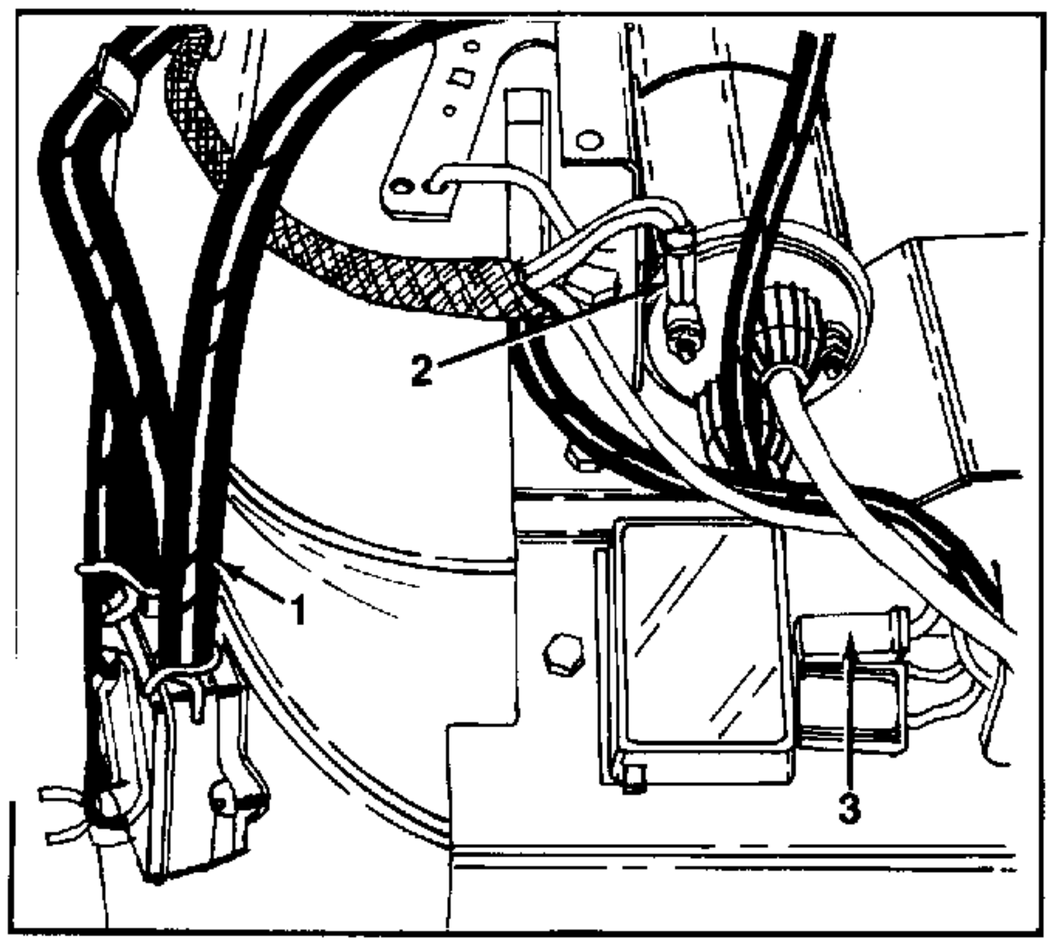

FIGURE 12.

6. Shut off the fuel and disconnect the fuel line from the fuel pump. Be sure to plug the line.
7. Disconnect the lead at the positive (+) terminal on the coil.
8. Disconnect the lead at the rectifier.

1. Fuel Line
2. Coil Positive Lead
3. Rectifier Lead

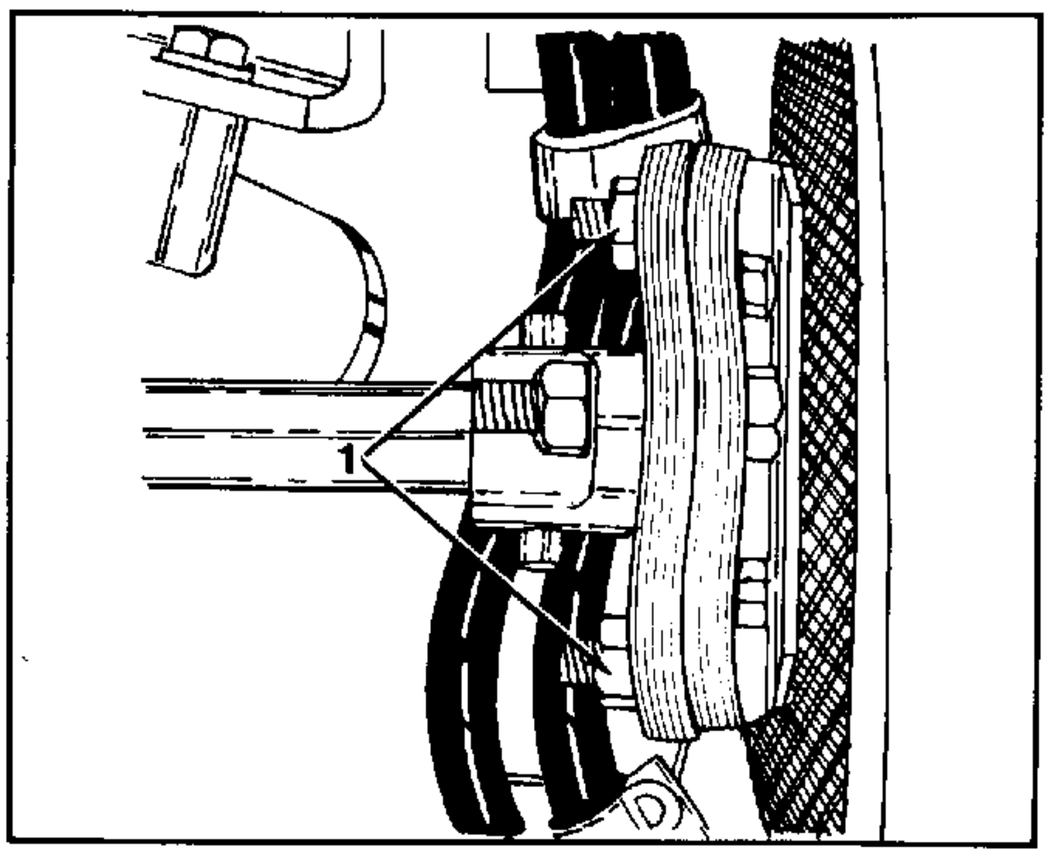

FIGURE 13.

9. Remove the nuts securing the front flex coupler to the flywheel flange.
10. Remove the engine mounting bolts.

1. Flywheel Flange Nuts

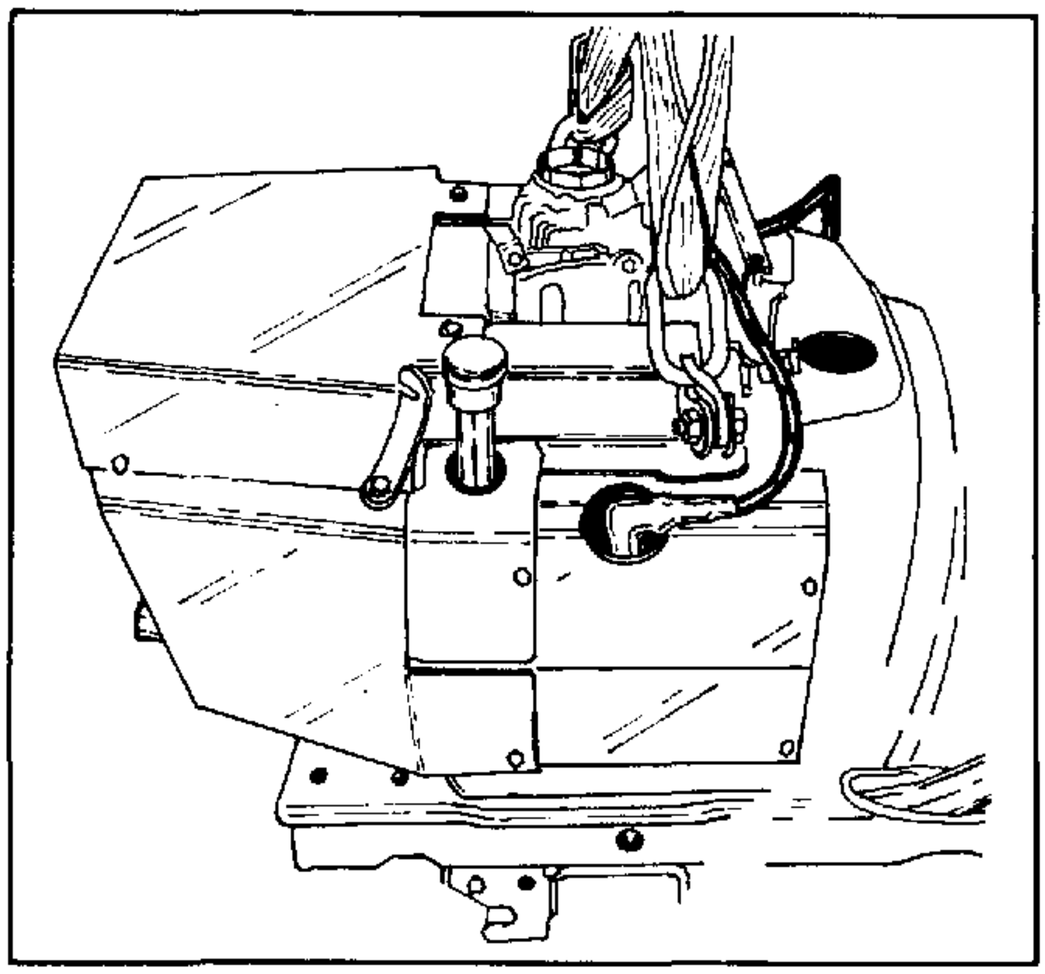

FIGURE 14.

11. Install lifting brackets as shown. Using a suitable hoist and sling, remove the engine.

NOTE: Refer to Service Manual GSS-1484-1 for specifications and overhaul procedures.

INSTALLATION

Installation is the reverse of the removal procedure with special attention to the following:

1. Torque engine mounting bolts to 27-34 N•m (20-25 ft. lbs.).
2. Check the engine oil level. Fill to the proper level. Refer to the operator's manual for the recommended oil.
3. Adjust the following as necessary:
   a. Carburetor
   b. Governor
   c. Ignition timing

SEAT SWITCH AND SAFETY START SWITCH

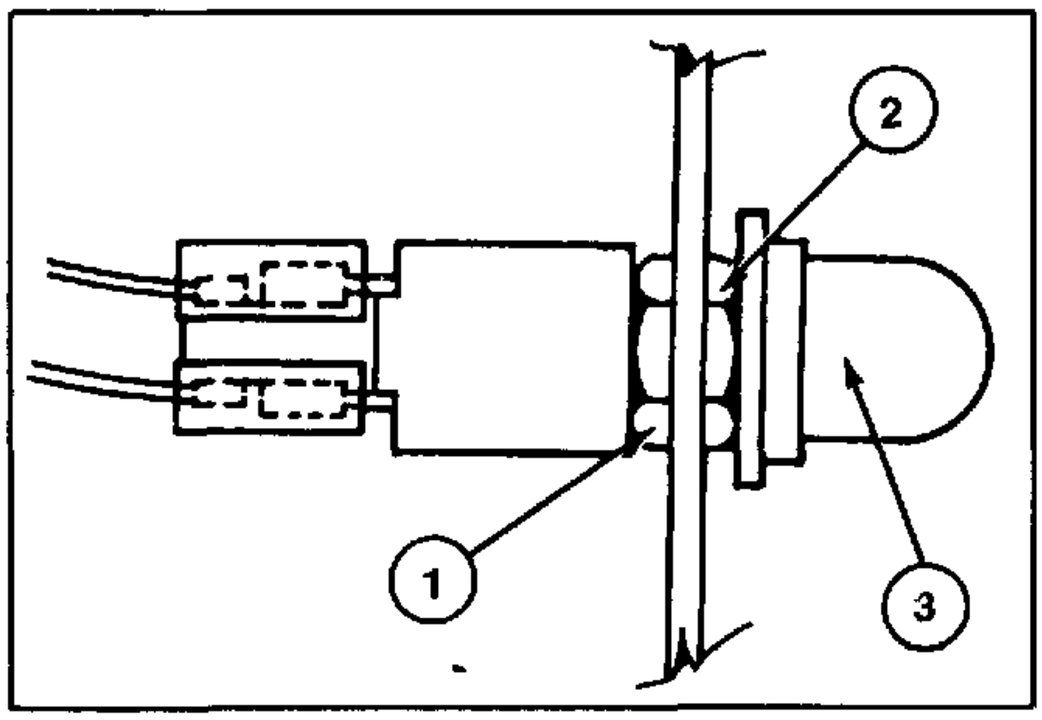

FIGURE 15.

Before installing the seat switch or the safety start switch be sure the stop nut is turned down to the bottom of the threads. Secure the switch with the lock nut.

NOTE: The switch boot screws on and off.

1. Stop Nut
2. Lock Nut
3. Boot

ENGINE REMOVAL
15 HP DIESEL

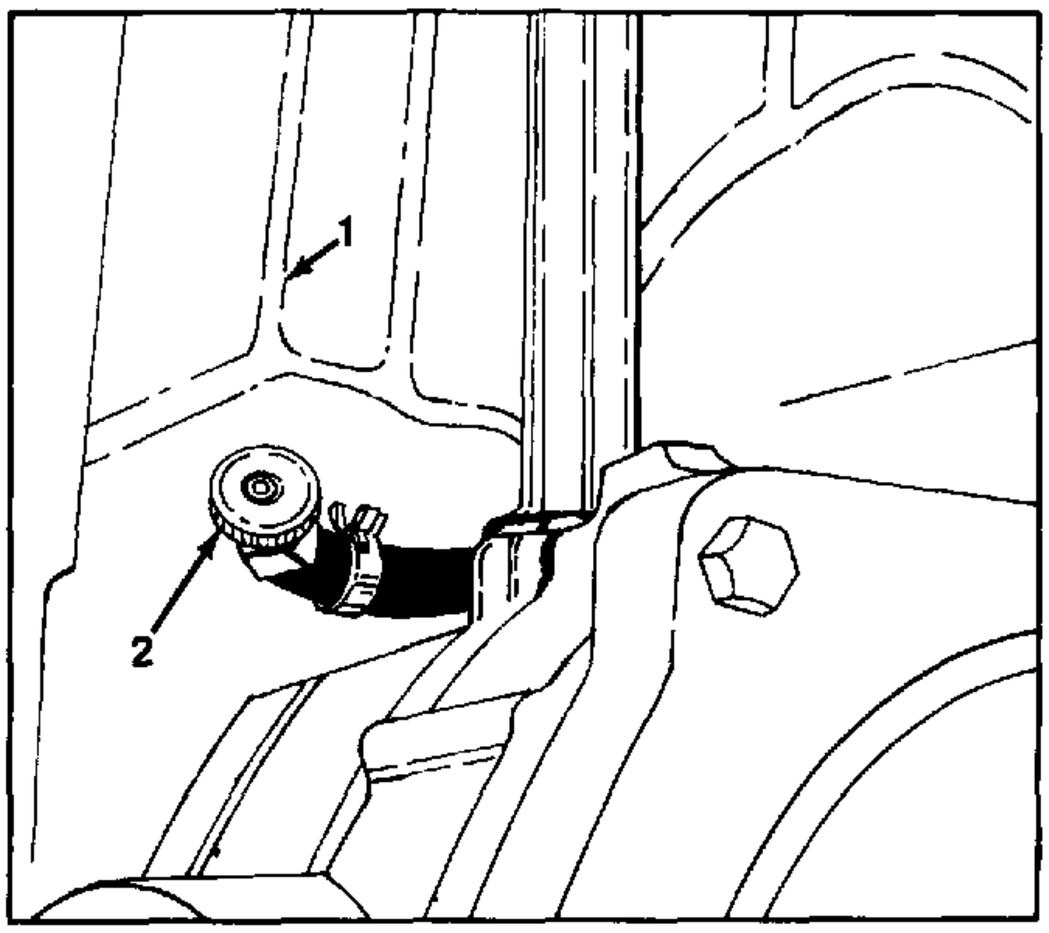

FIGURE 1.

1. Park the tractor on a flat level surface.
2. Close the shut-off valve at the fuel tank, located at the rear of tractor; turn counterclockwise. See figure 1.
3. Raise the hood.

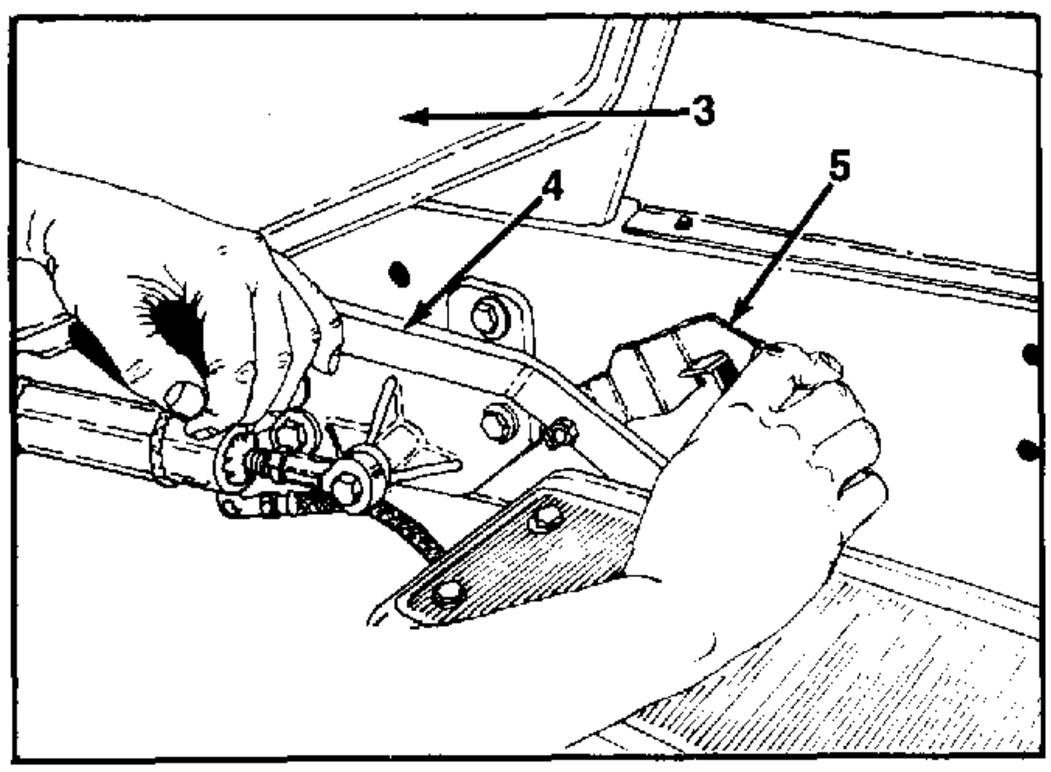

FIGURE 2.

4. Lock the brake pedal in the "down" position for ease of side panel removal. See figure 2. The exhaust mainfold side panel must be "worked" out of position.

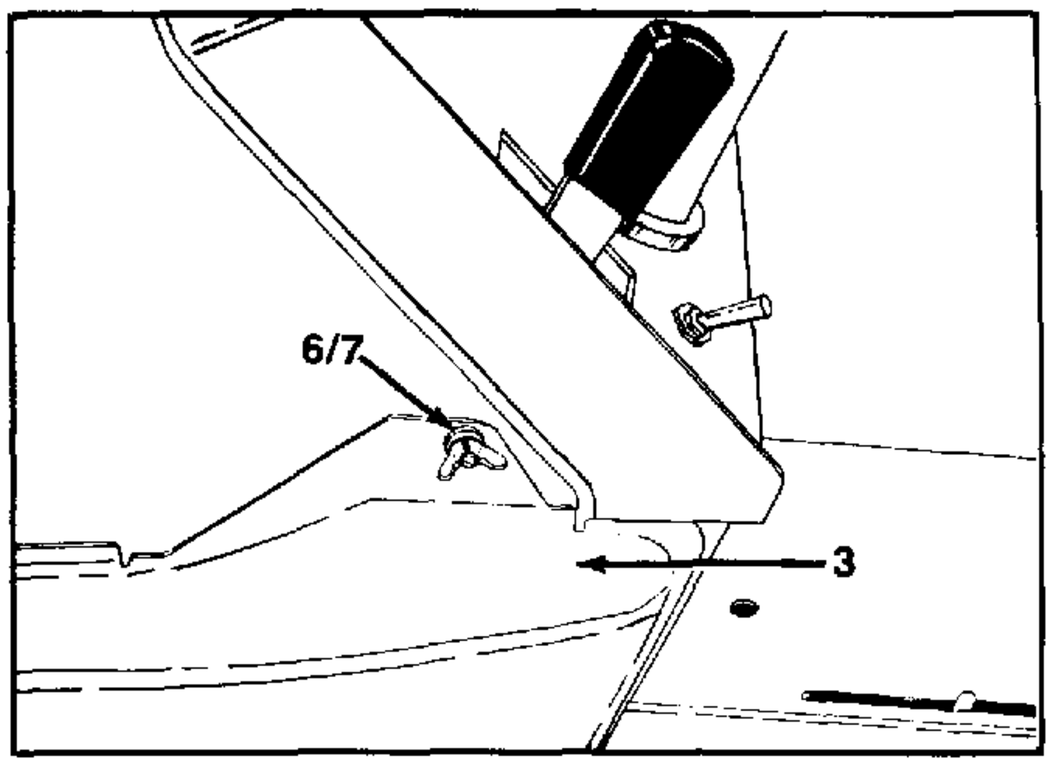

FIGURE 3.

5. Remove the two side panels from tractor, by removing the extension spring, flat washer and wing nut on each side. See figures 3 and 4. Retain spring and hardware for reassembly.

1. Fuel Tank
2. Fuel Shut-Off Valve
3. Side Panel
4. Brake Pedal
5. Brake Pedal Lock
6. Flat Washer
7. Wing Nut

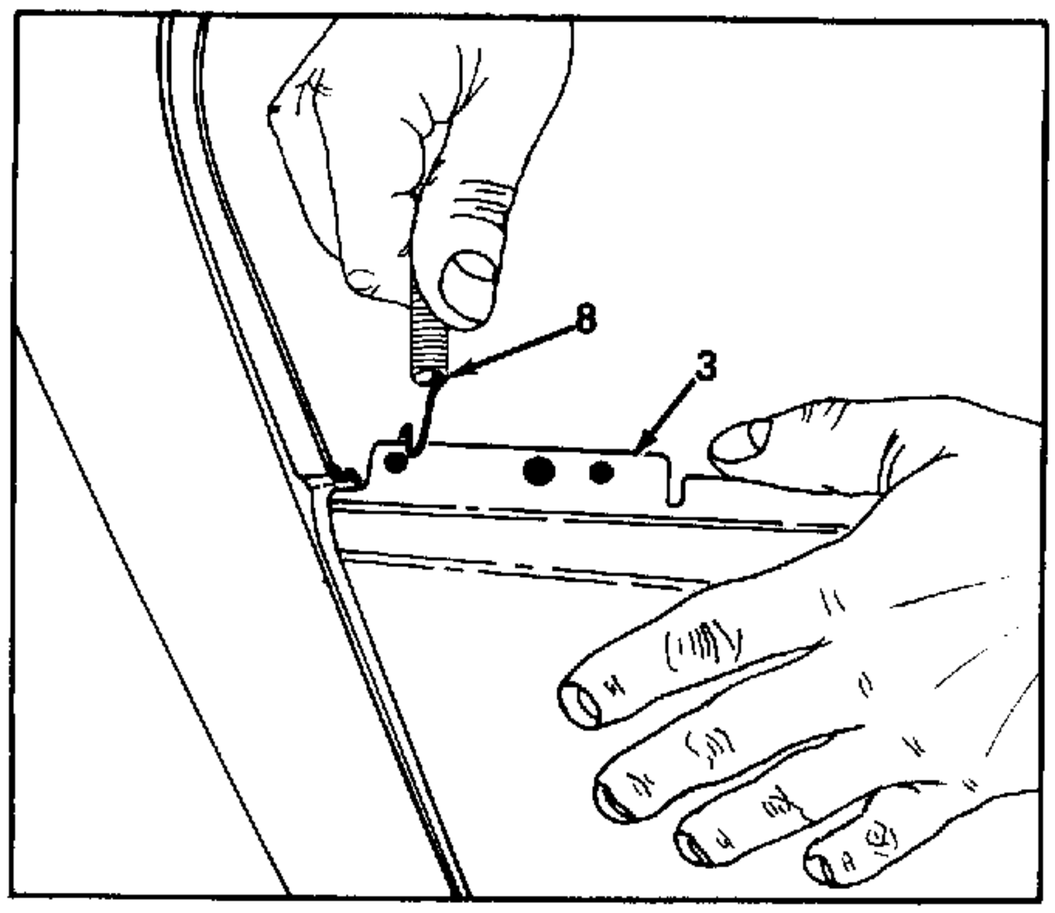

FIGURE 4.

6. Disconnect headlight wiring harness at each headlight. See figure 5.

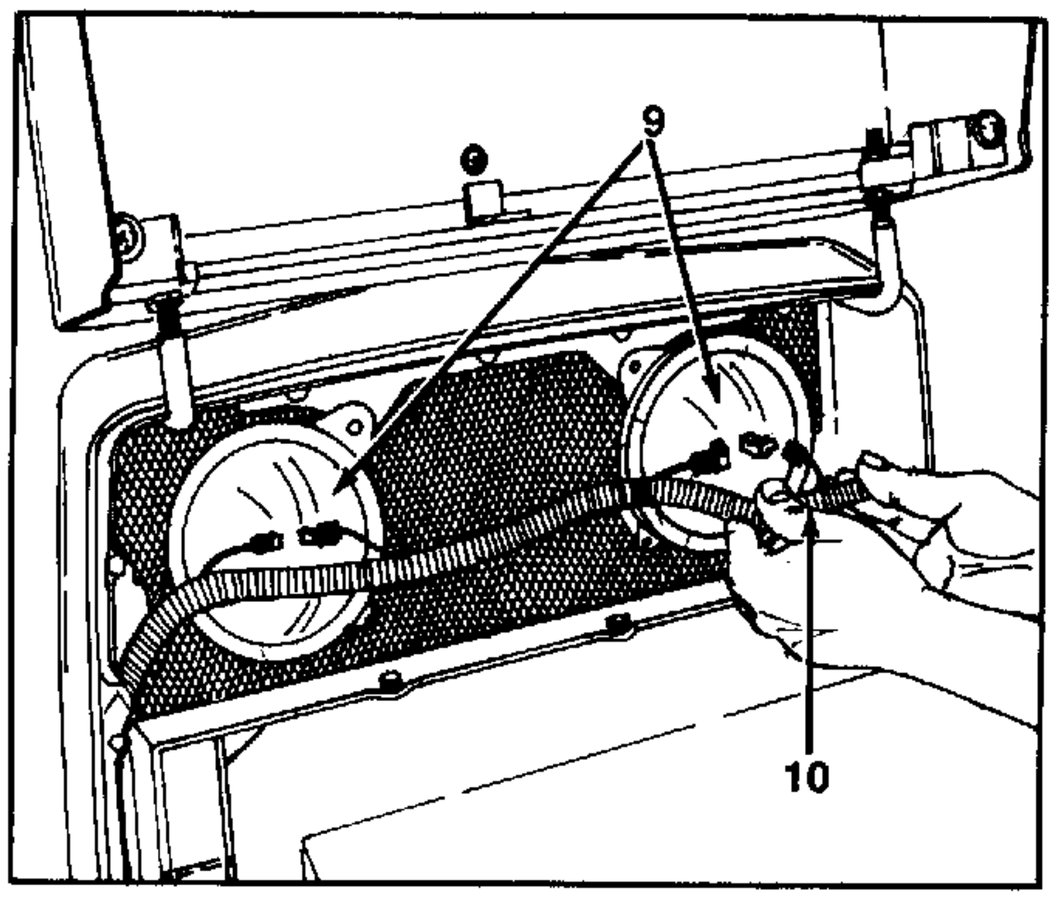

FIGURE 5.

7. Push the cable clamp at grille aside to allow the headlight wire harness to be removed. See figure 6.

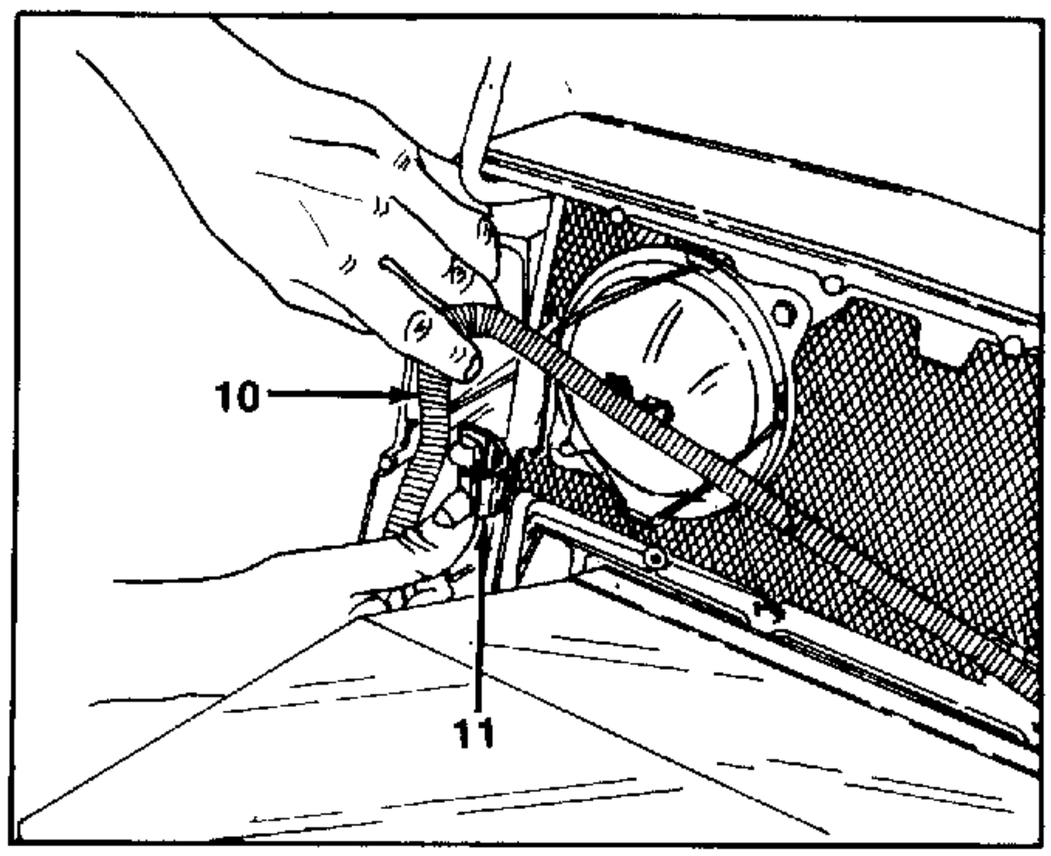

FIGURE 6.

3. Side Panel
8. Extension Spring
9. Headlights
10. Headlight Wire Harness
11. Cable Clamp

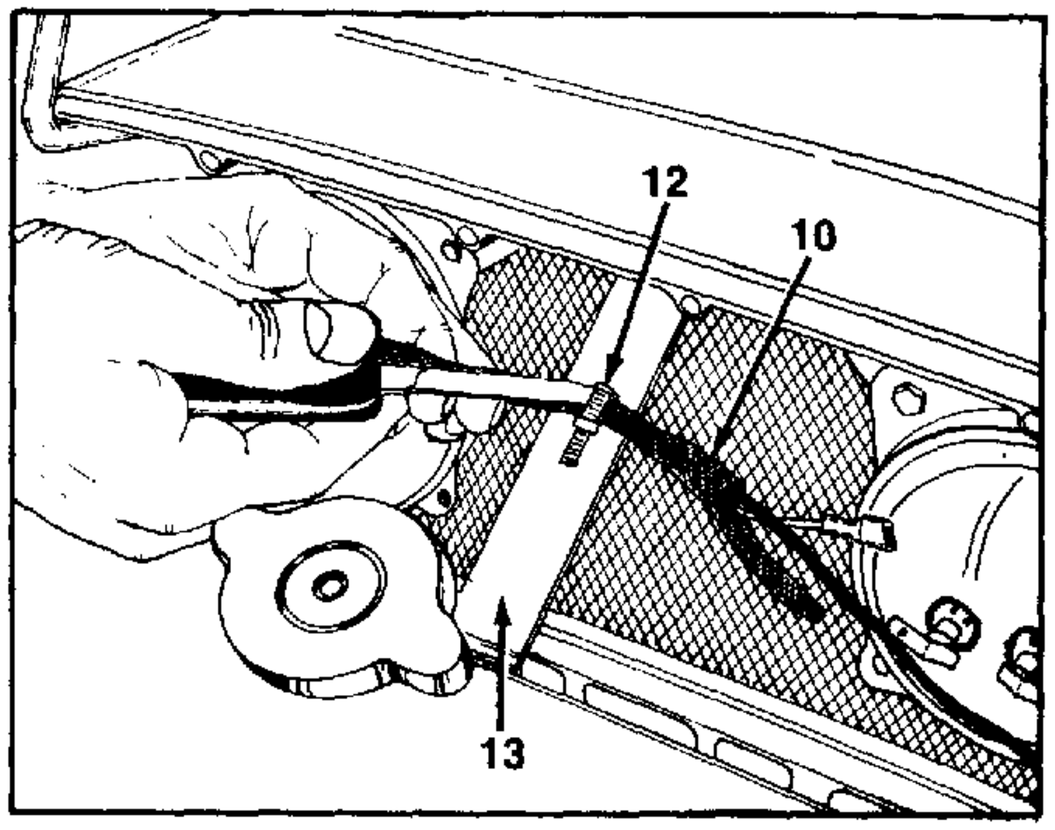

FIGURE 7.

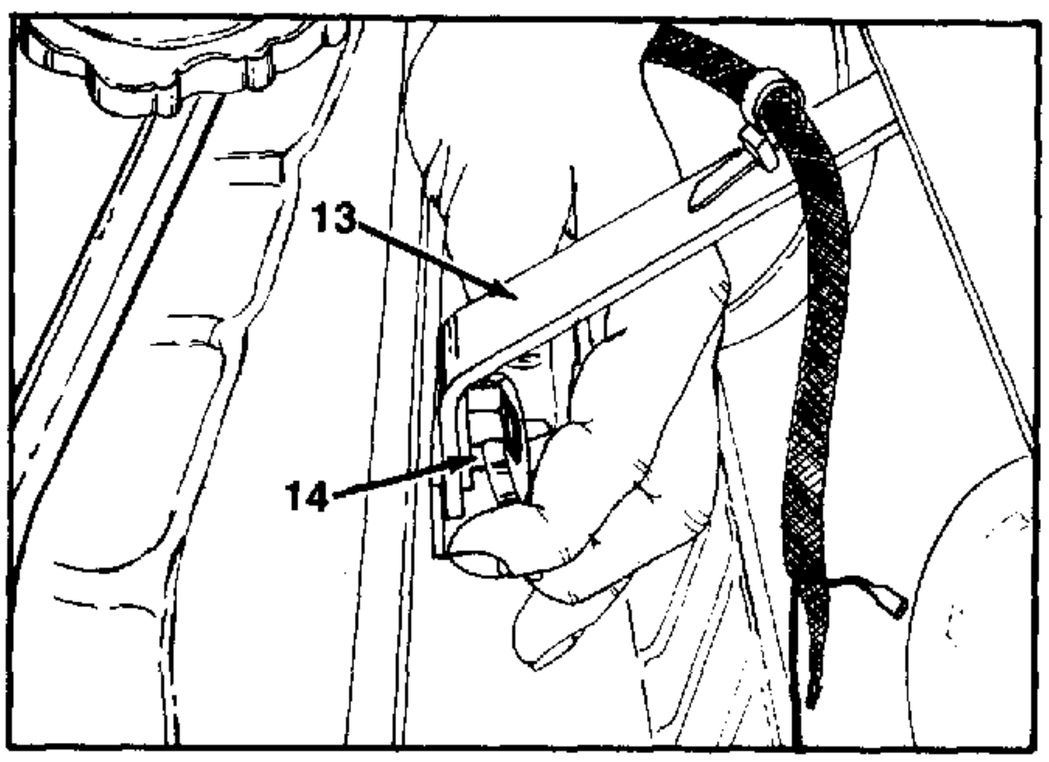

FIGURE 8.

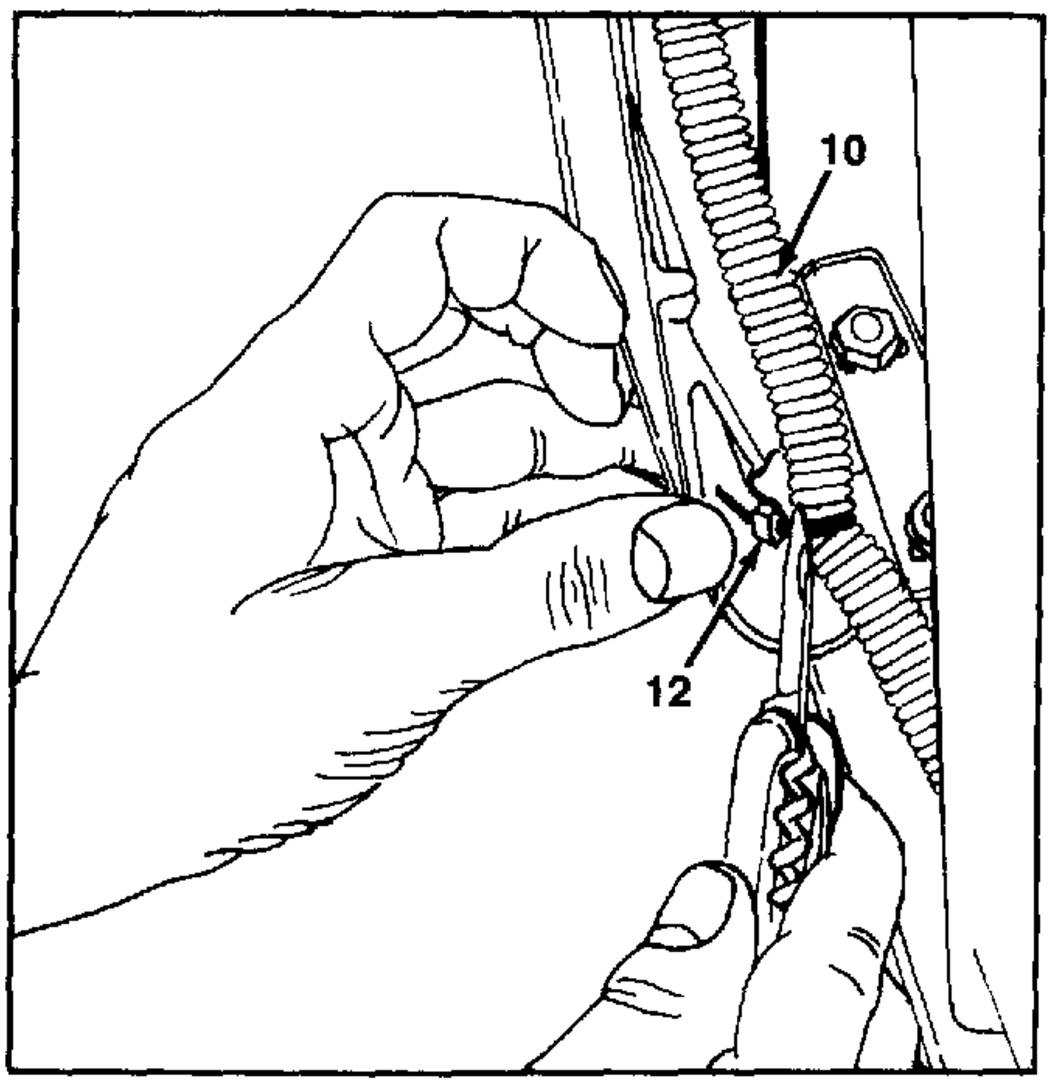

FIGURE 9.

8. Cut the cable tie holding the headlight wire harness at grille support strap. See figure 7.
9. Remove the grille support strap at radiator. See figure 7.

10. Cut the cable tie at the bottom left hand side of grille, holding the headlight wire harness. See figure 9.

10. Headlight Wire Harness
12. Cable Tie
13. Grille Support Strap
14. Hex Nut

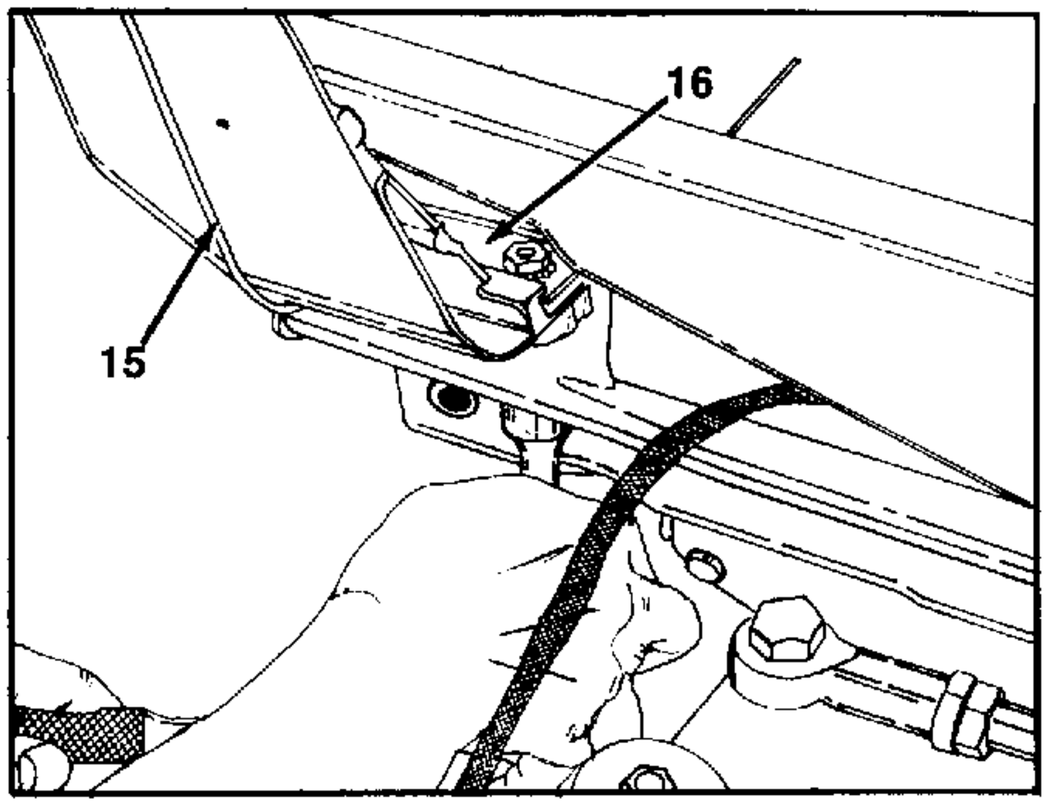

FIGURE 10.

11. Support hood and grille assembly and remove two bolts and lock washers securing each side of grille, at nut plates, to the tractor frame, using a socket wrench up through the access holes in frame. See figure 10.
12. Carefully lift hood and grille assembly from tractor. Slide the two nut plates from the grooves in the grille support.

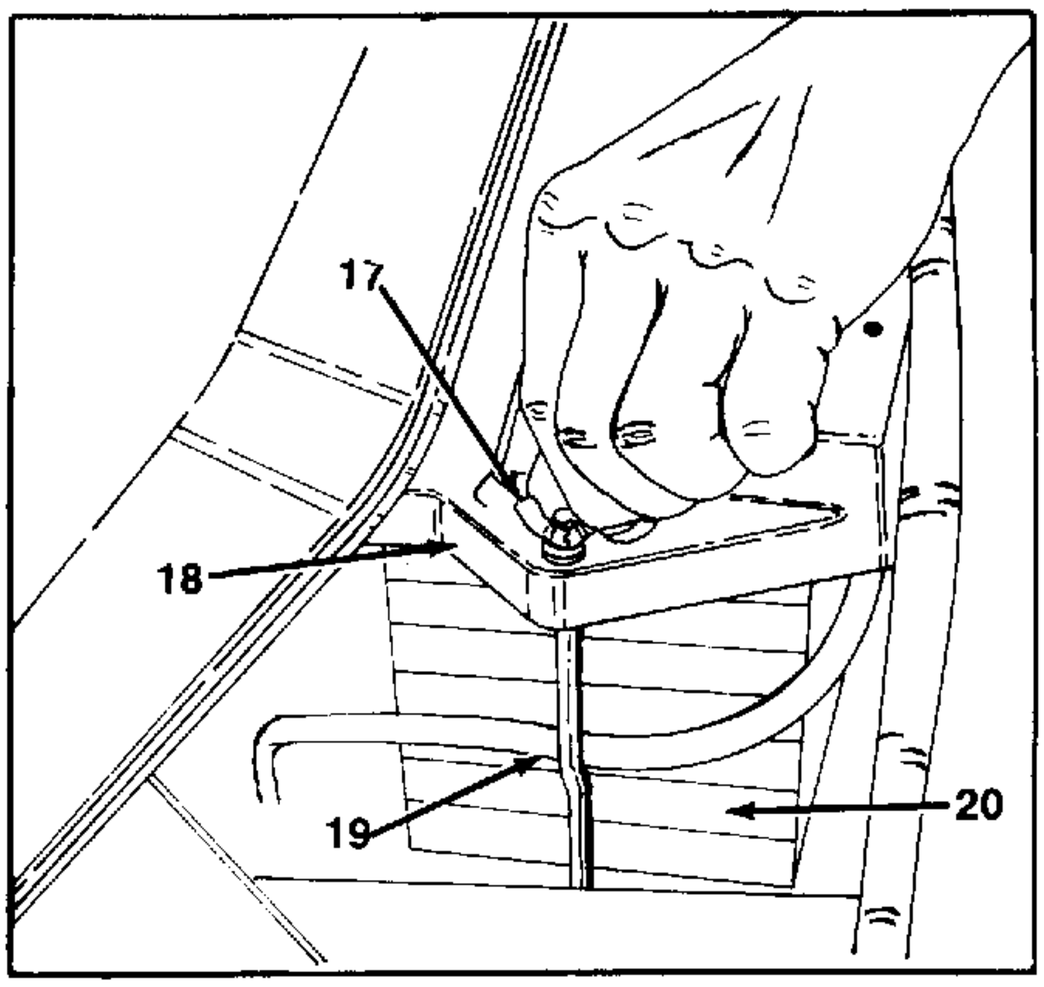

FIGURE 11.

13. Remove the battery cover by removing two wing nuts from battery hold downs. See figure 11.

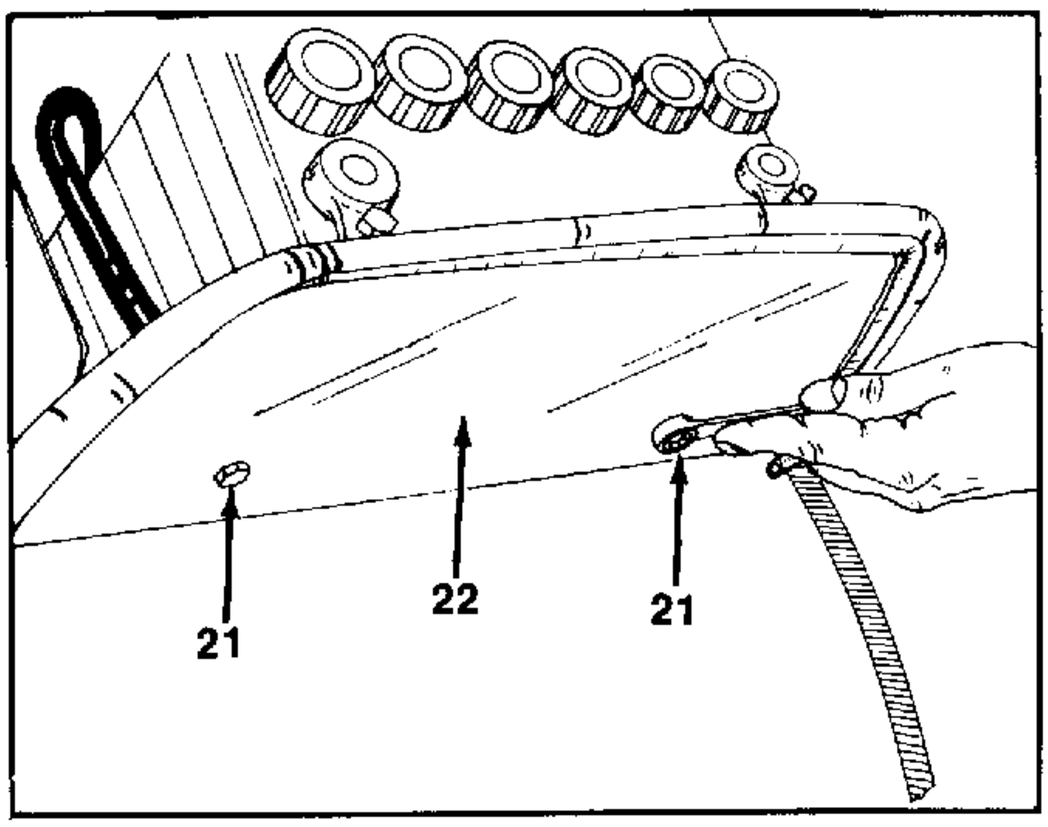

FIGURE 12.

14. Remove two hex nuts from heat shield, remove heat shield. See figure 12.

15. Grille
16. Nut Plates
17. Wing Nut
18. Battery Cover
19. Battery Hold Down
20. Battery
21. Hex Nuts
22. Heat Shield

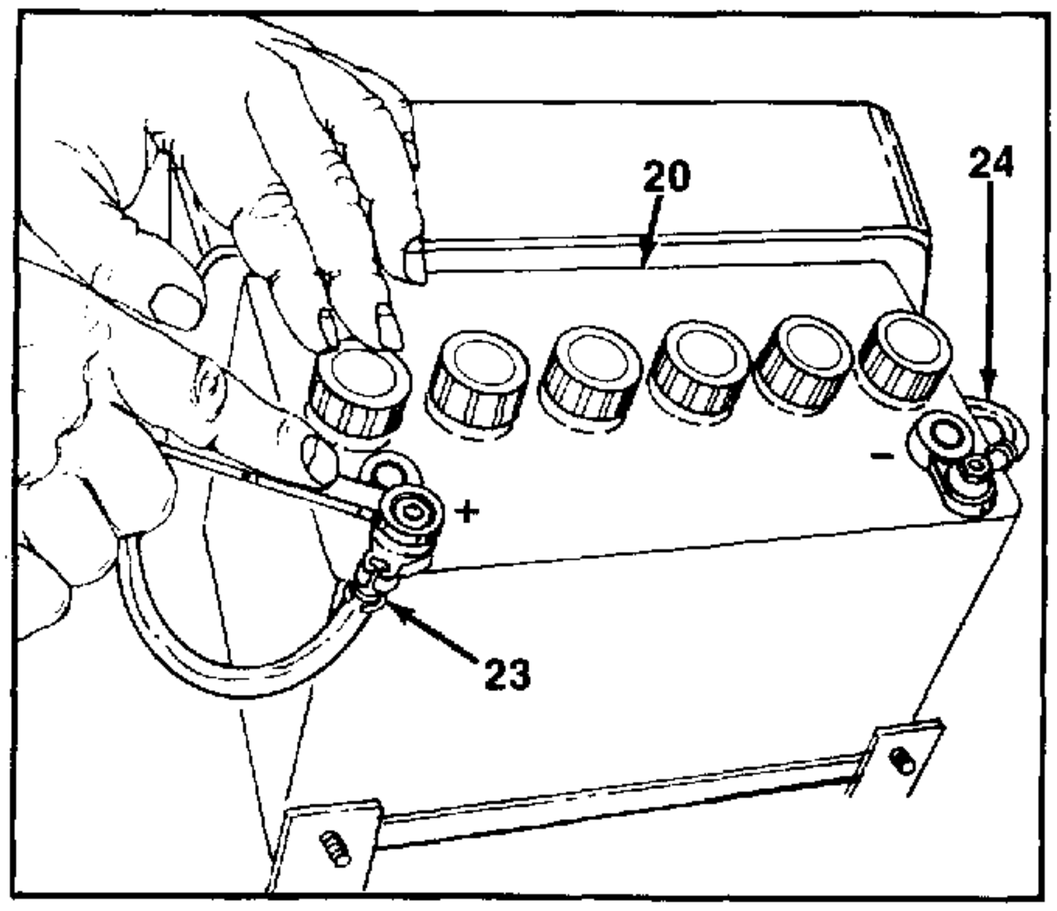

FIGURE 13.

15. Remove the positive and negative battery cables at battery terminals. See figure 13.
16. Carefully lift out the battery.

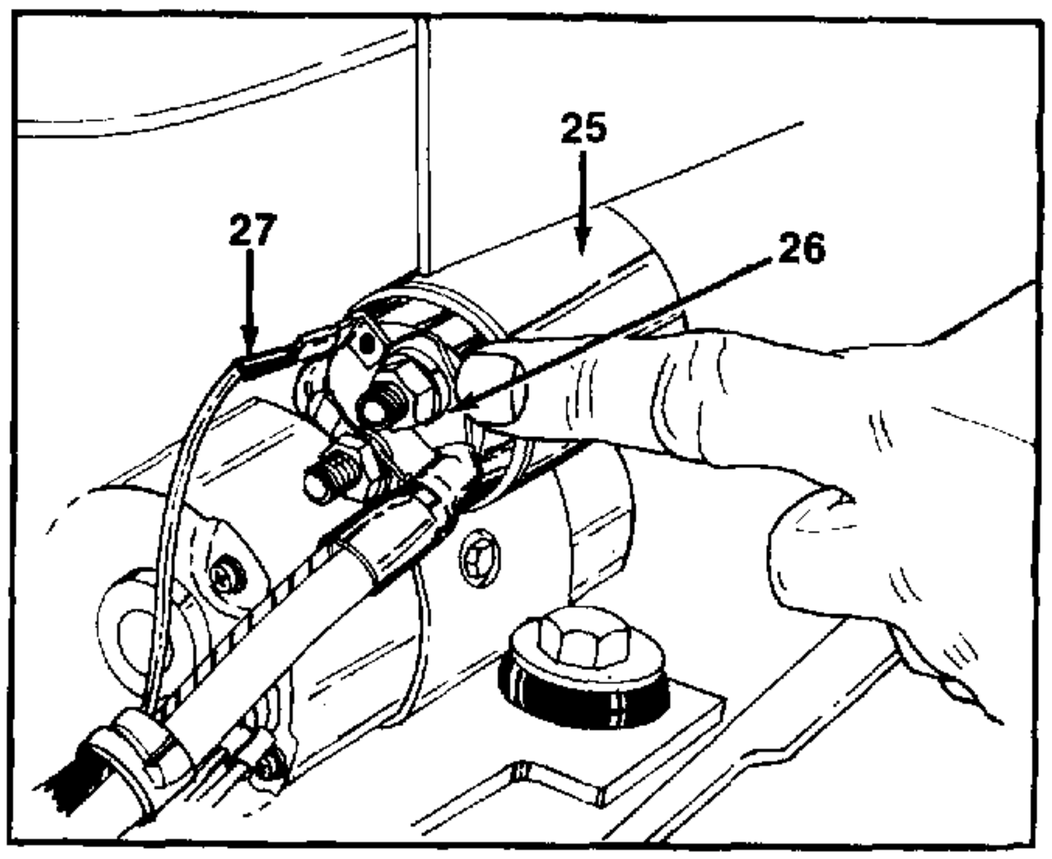

FIGURE 14.

17. Disconnect positive cable from starter solenoid terminal, located on the right hand side of tractor. Disconnect switch spade from solenoid terminal. See figure 14.

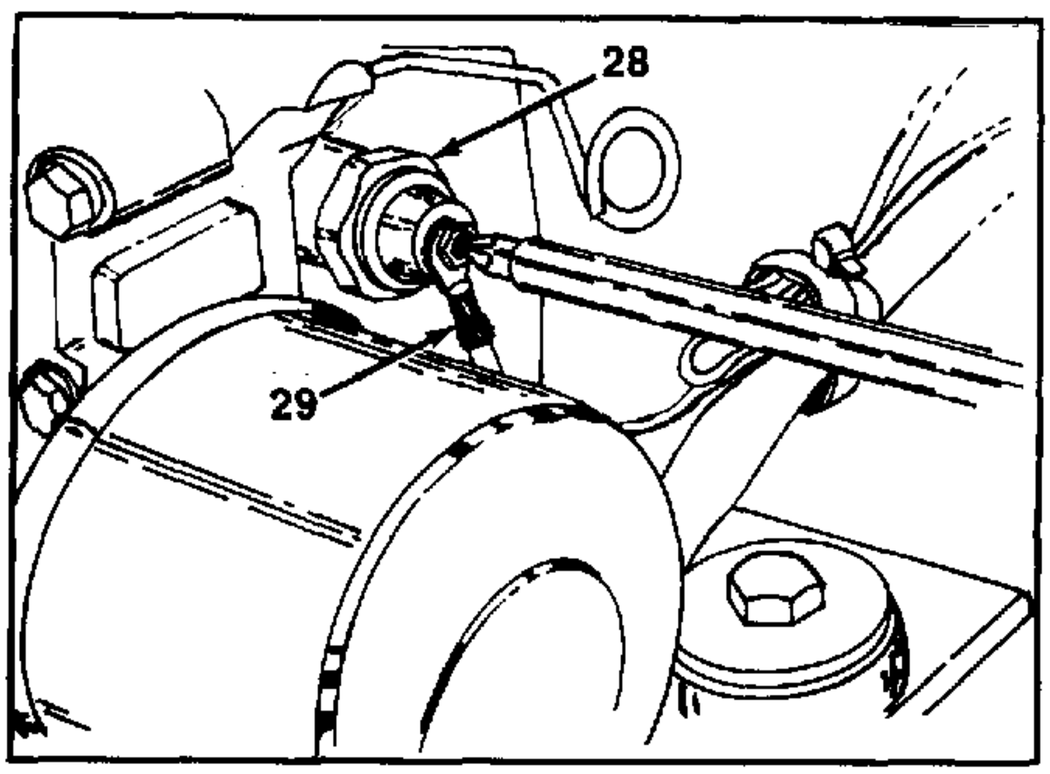

FIGURE 15.

18. With a Phillips screwdriver remove the screw securing the wire to the oil sending unit terminal, located on the right hand side of tractor. See figure 15. Remove the wire and reinstall the screw.

20. Battery
23. Positive Battery Cable
24. Negative Battery Cable
25. Starter Solenoid
26. Positive Terminal
27. Switch Spade
28. Oil Sending Unit
29. Wire to Oil Sending Unit

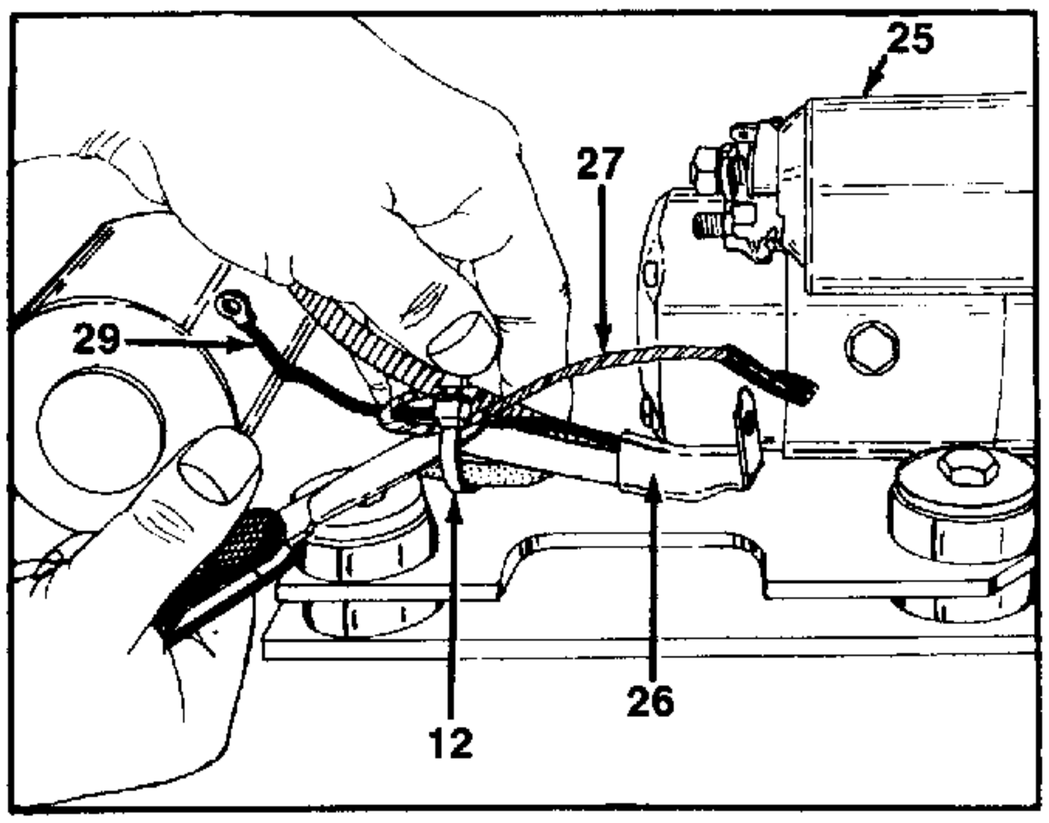

FIGURE 16.

19. Cut the cable tie at wire harness, solenoid starter terminal and oil sending unit wire. See figure 16.

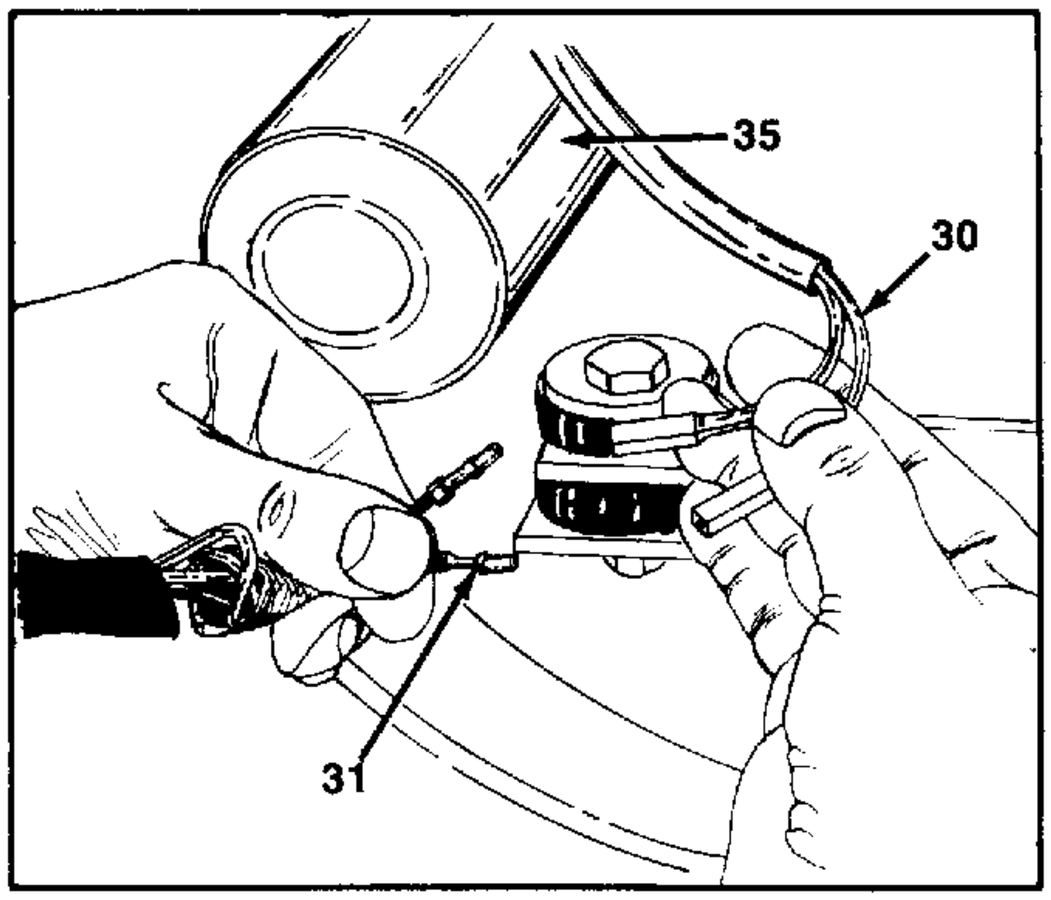

FIGURE 17.

20. Disconnect the two blue alternator wires from the wiring connectors in the wiring harness. See figure 17.

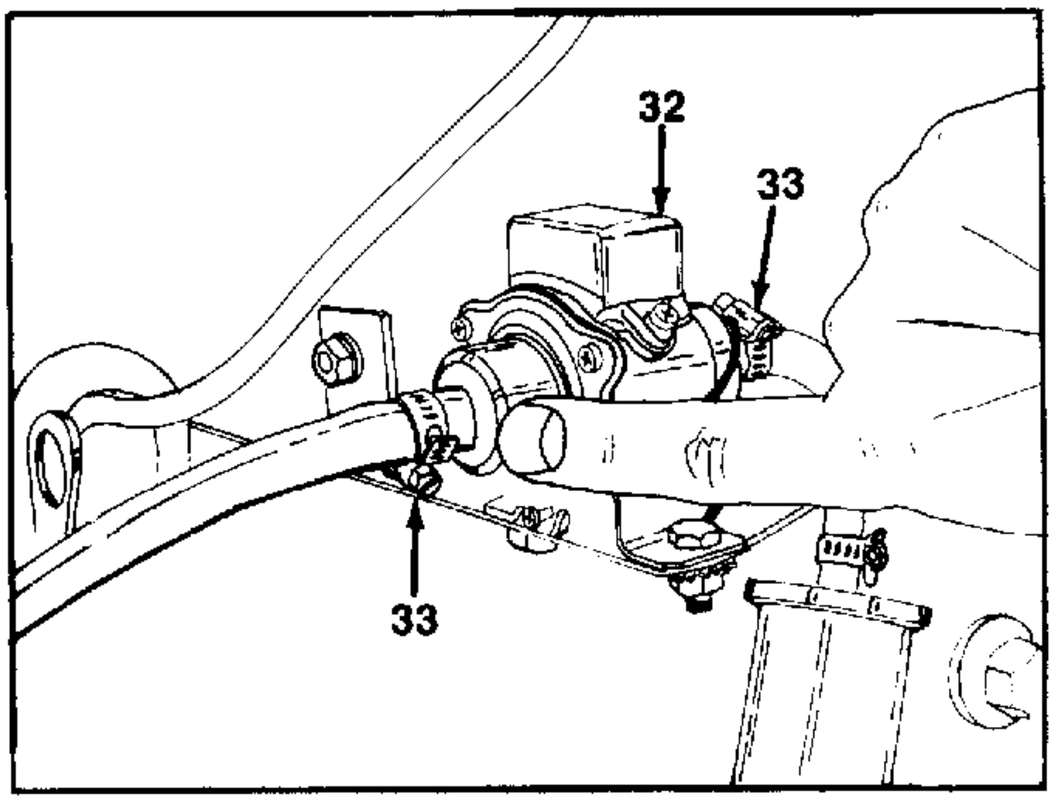

FIGURE 18.

21. Loosen hose clamps and remove inlet and outlet fuel hose from the fuel pump. Disconnect and remove fuel hose from the primary fuel filter. Cap all hoses and inlet and outlet openings. See figures 18 and 19.

30. Blue Alternator Wires
31. Wiring Connectors
32. Fuel Pump
33. Hose Clamps
34. Primary Fuel Filter
35. Alternator

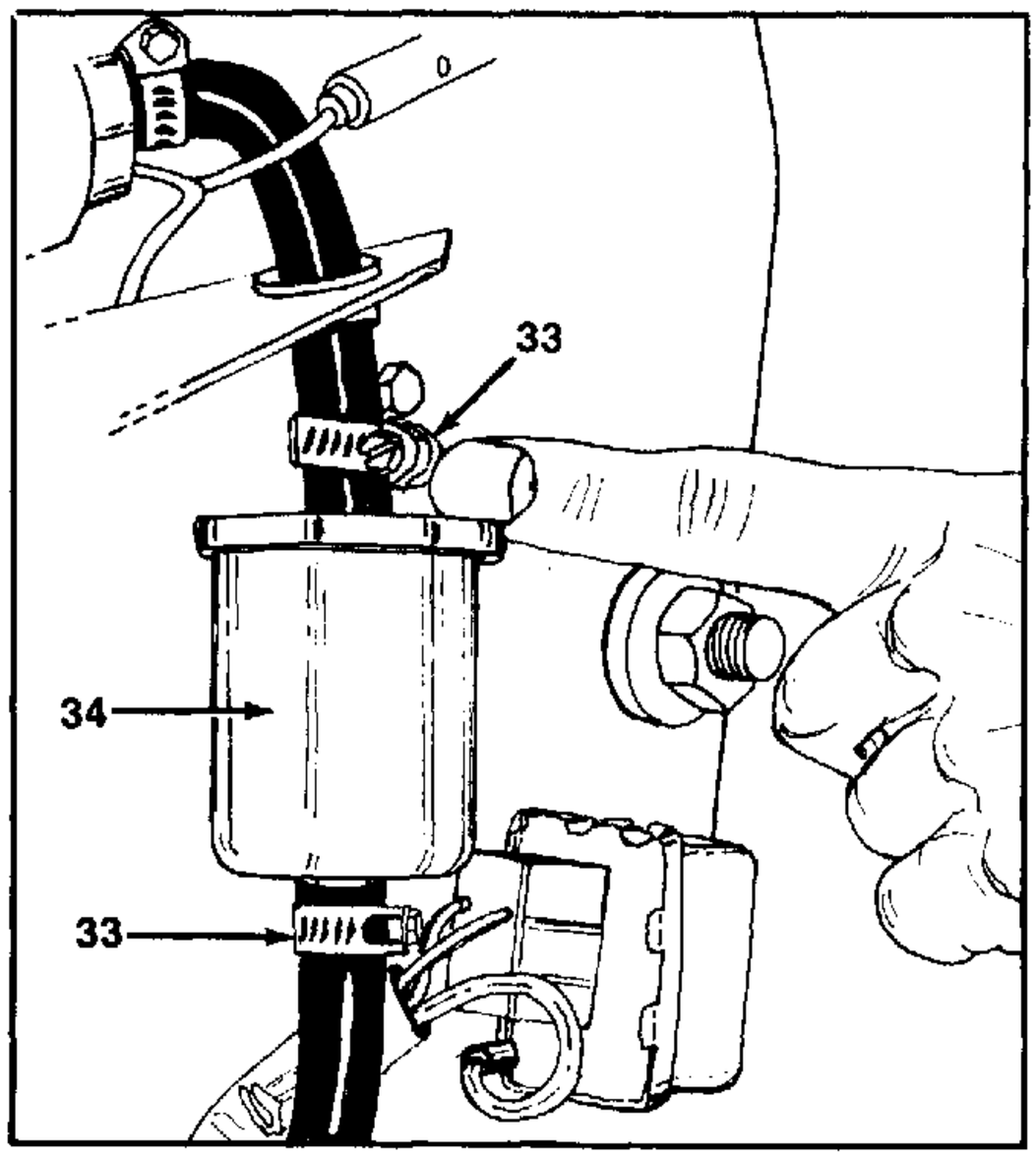

FIGURE 19.

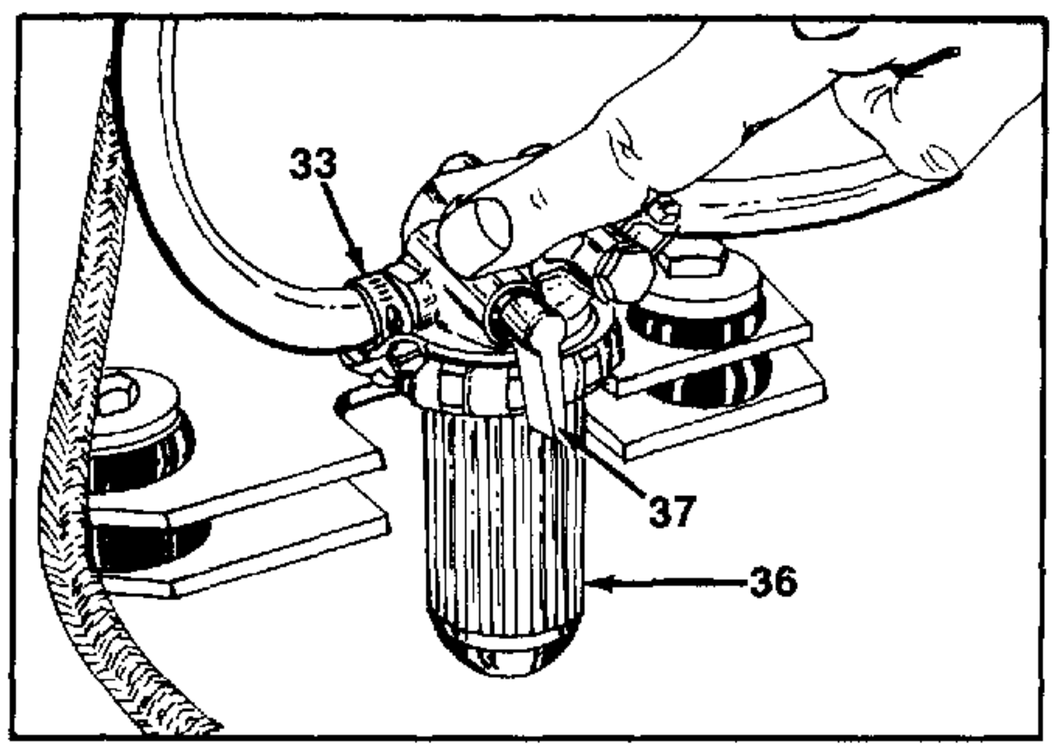

FIGURE 20.

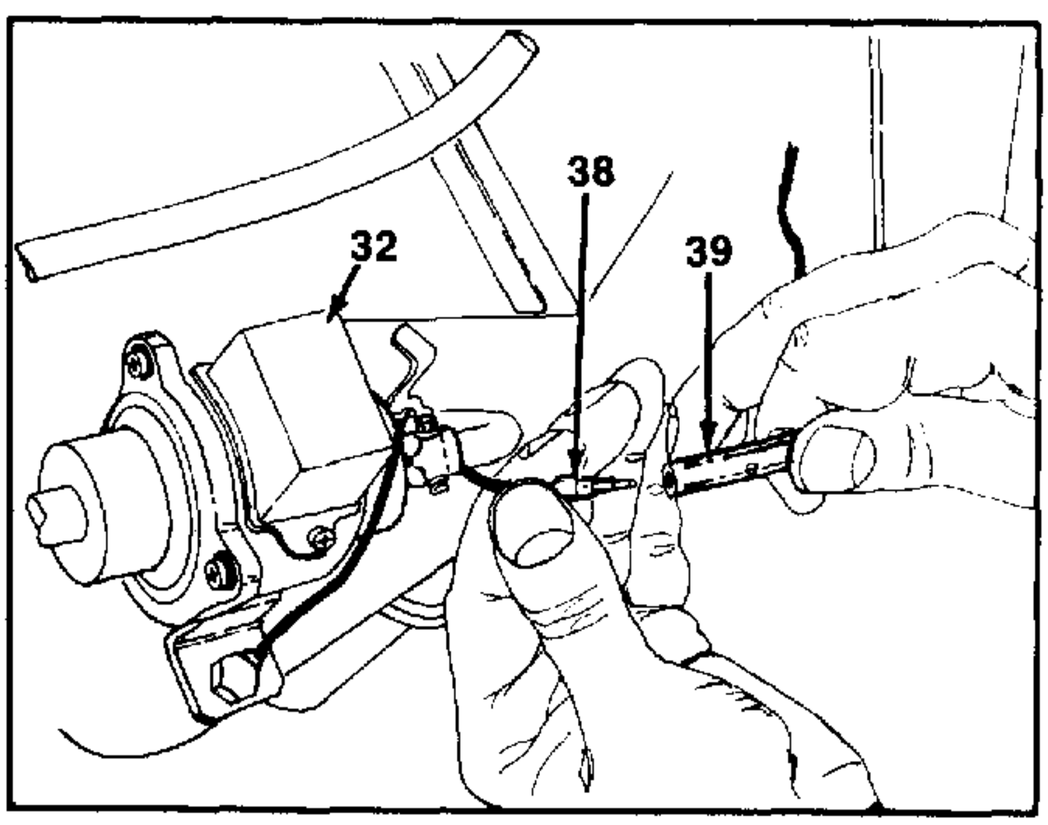

FIGURE 21.

22. Shut the fuel cock "off" at the secondary fuel filter. See figure 20.
23. Loosen hose clamp and remove inlet fuel hose from primary fuel filter to secondary fuel filter. See figure 20.
24. Disconnect the fuel pump positive wire from the connector. See figure 21.

32. Fuel Pump
33. Hose Clamps
34. Primary Fuel Filter
36. Secondary Fuel Filter
37. Fuel Cock
38. Fuel Pump Positive Wire
39. Connector

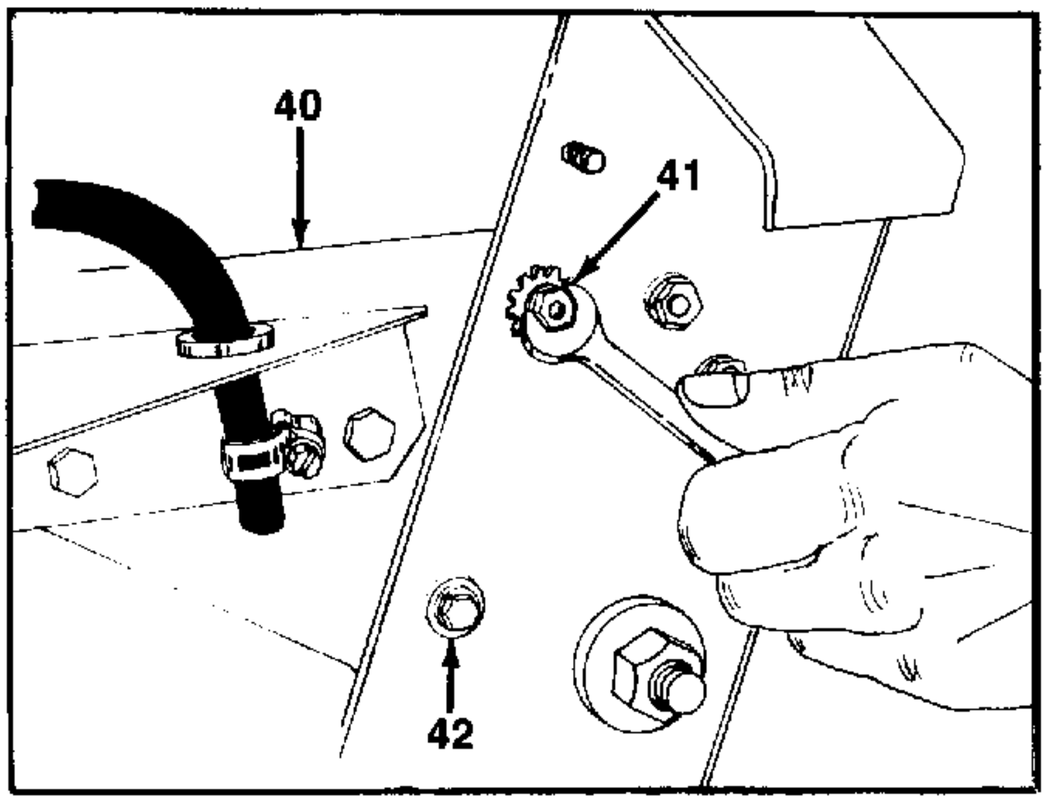

FIGURE 22.

25. Remove one bolt and lock washer from each side of the battery tray lower mounting position. Remove one bolt and flat washer from each side of the battery tray upper mounting (slotted hole) position. See figure 22.

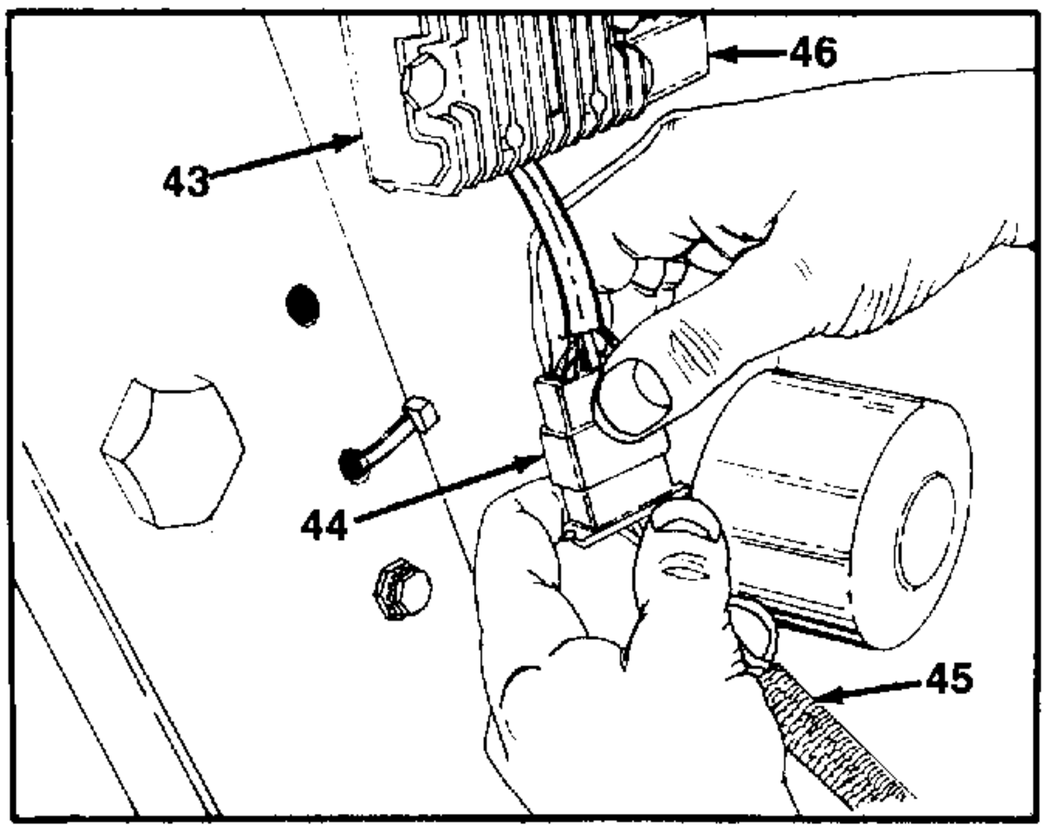

FIGURE 23.

26. Disconnect the wire harness from the regulator and circuit breaker. See figure 23.

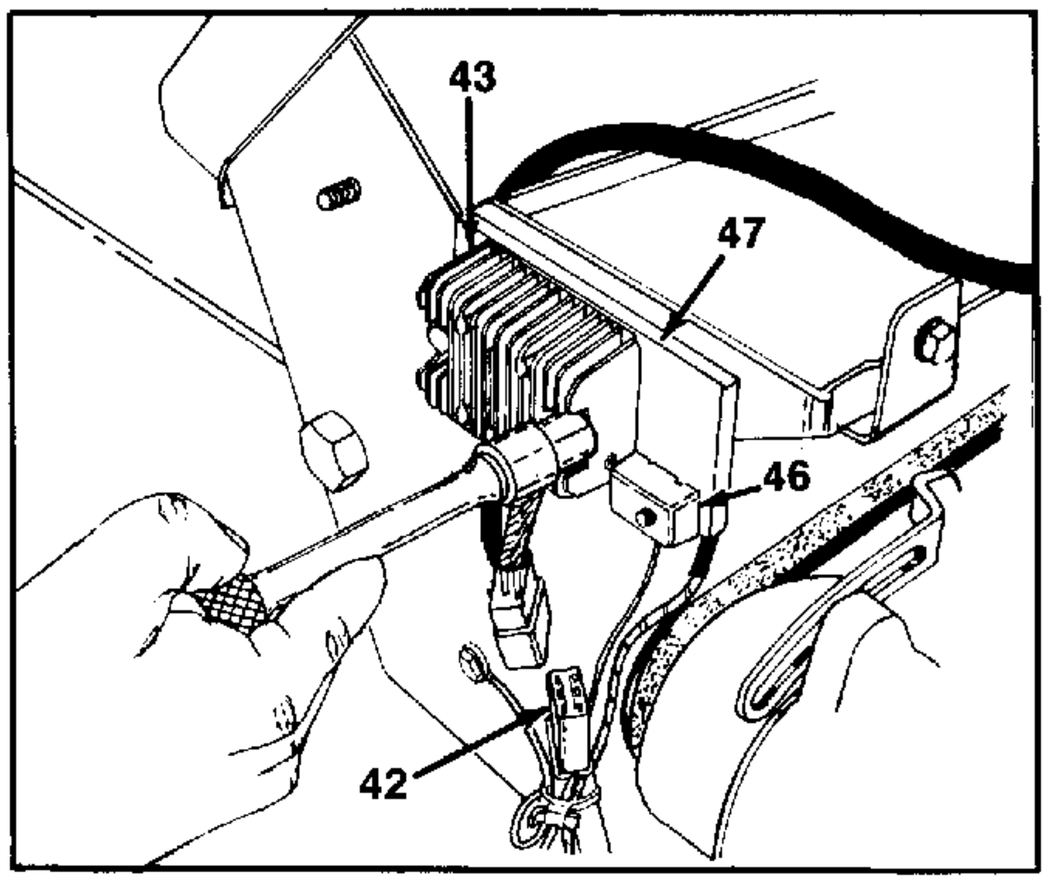

FIGURE 24.

27. Remove the hex bolt holding the regulator, circuit breaker and regulator panel. See figure 24.

40. Battery Tray
41. Bolt and Washer (Upper Hole)
42. Bolt and Washer (Lower Hole)
43. Regulator
44. Harness Connector
45. Wiring Harness
46. Circuit Breaker
47. Regulator Panel

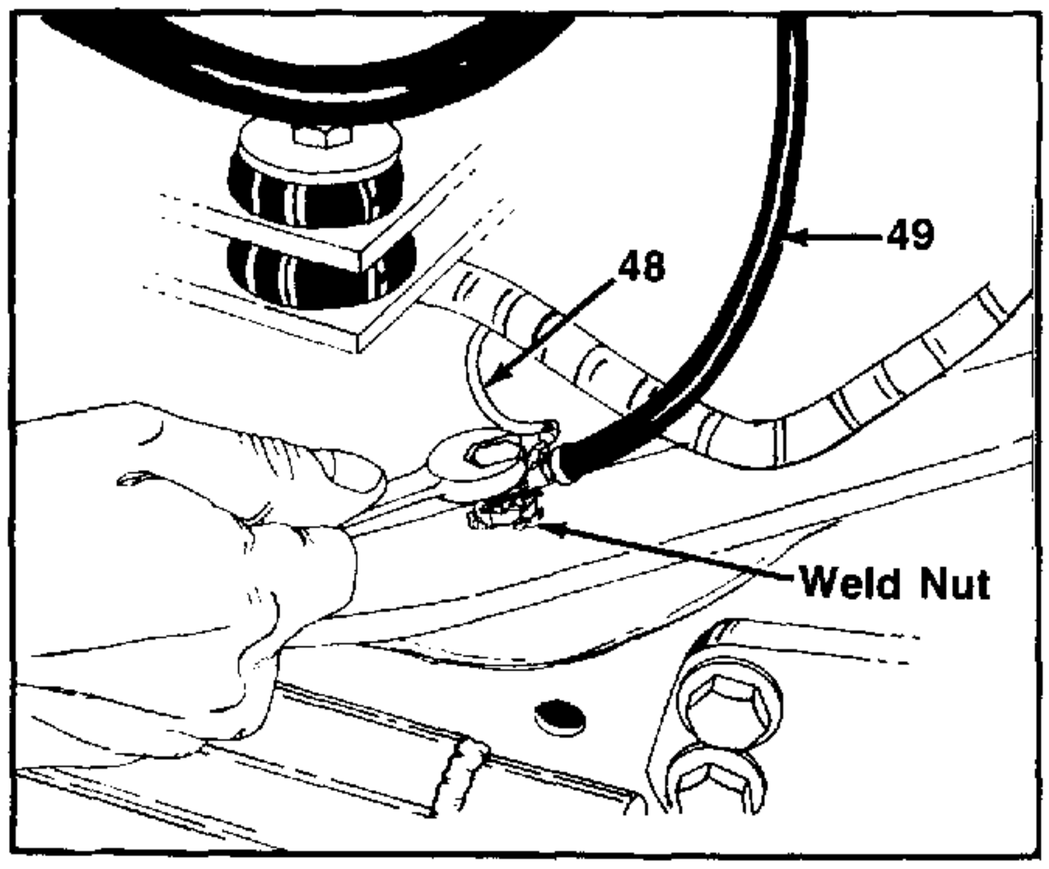

FIGURE 25.

28. Remove the battery-to-ground cable and small green wire from left hand side of tractor frame. See figure 25.

NOTE

Bolt and star washer at weld nut on frame must make a good ground (contact) upon reassembly. See figure 25.

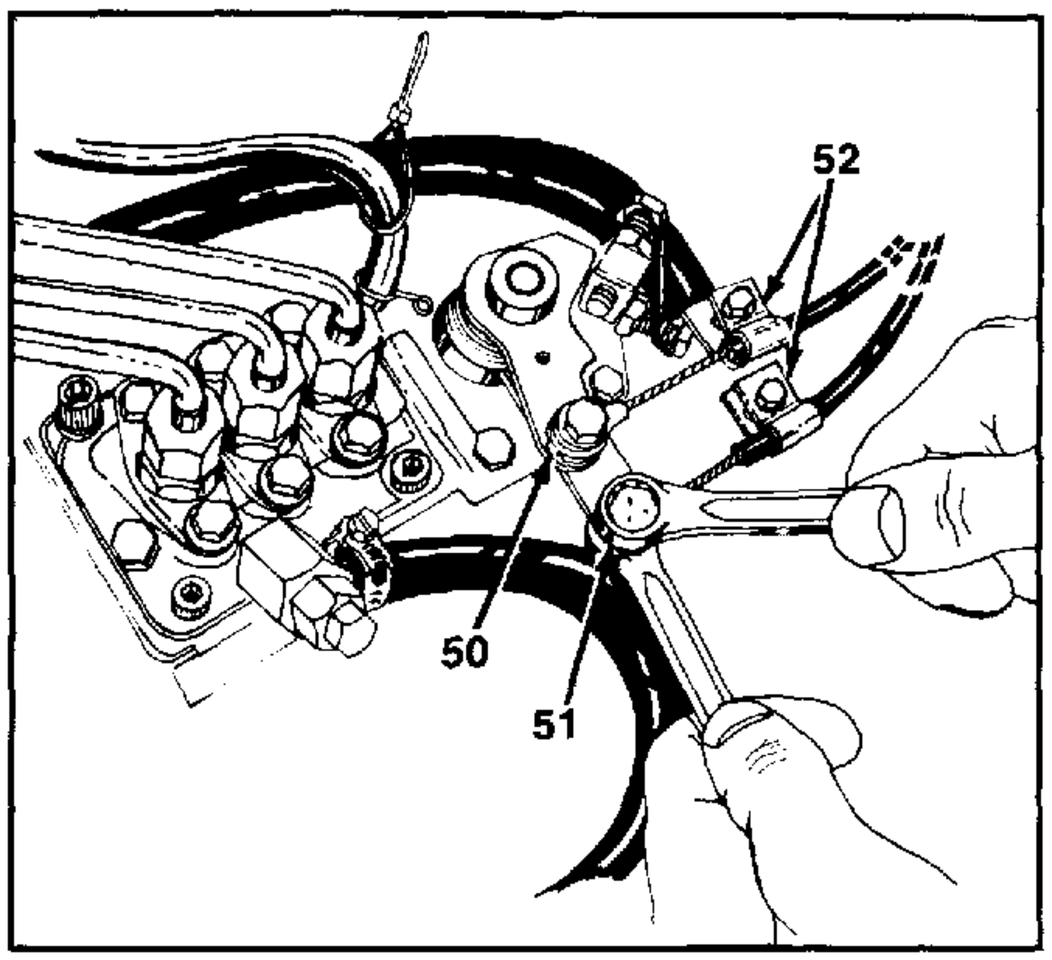

FIGURE 26.

29. Remove the engine stop lever cable and engine speed control lever cable from the levers. Remove the cable hold-down clips. See figure 26.

NOTE

The top lever (engine stop lever) has a swivel connection, and the attaching nut is at the top of the lever. The lower lever (engine speed control lever) is wire connected and the attaching nut is at the bottom of the lever. See figure 26.

48. Small Green Wire
49. Battery-to-Ground Cable
50. Engine Stop Lever
51. Engine Speed Control Lever
52. Cable Hold-Down Clips

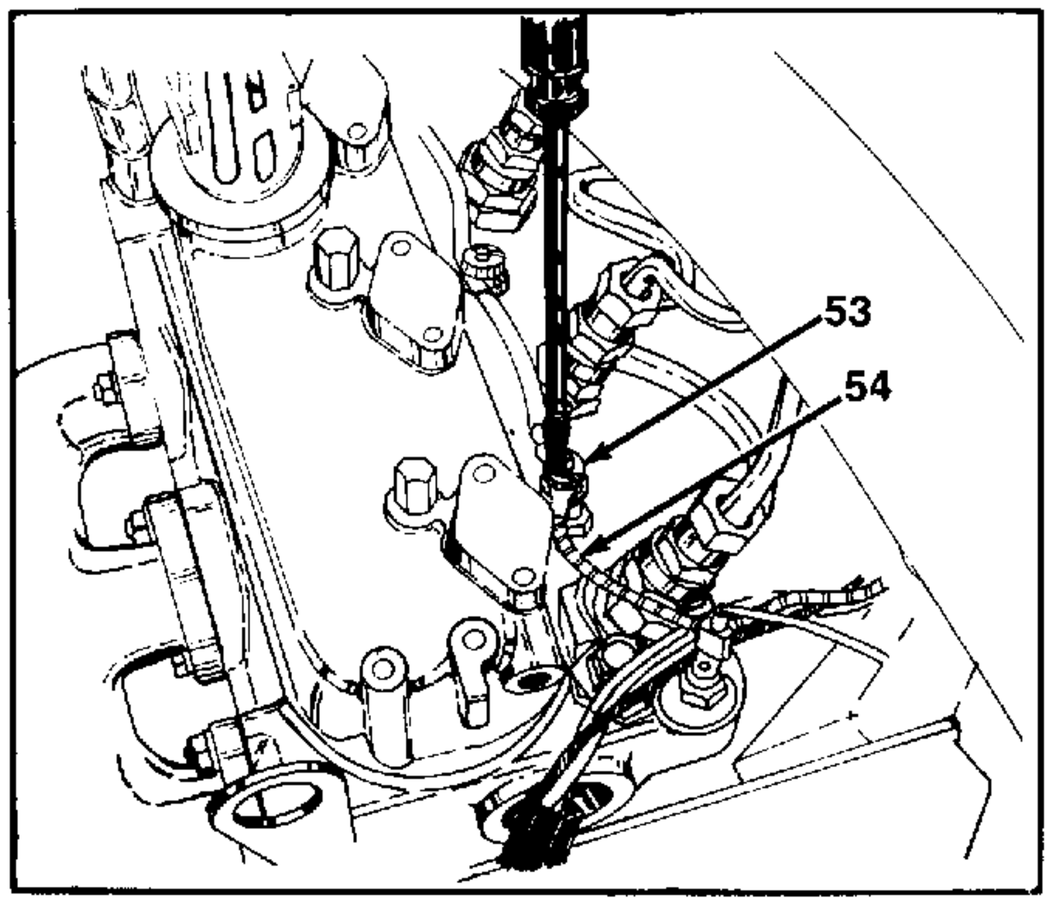

FIGURE 27.

30. Remove the thumb screw from top, front of engine, and remove the glow plug wire. See figure 27. Reassemble the thumb screw.

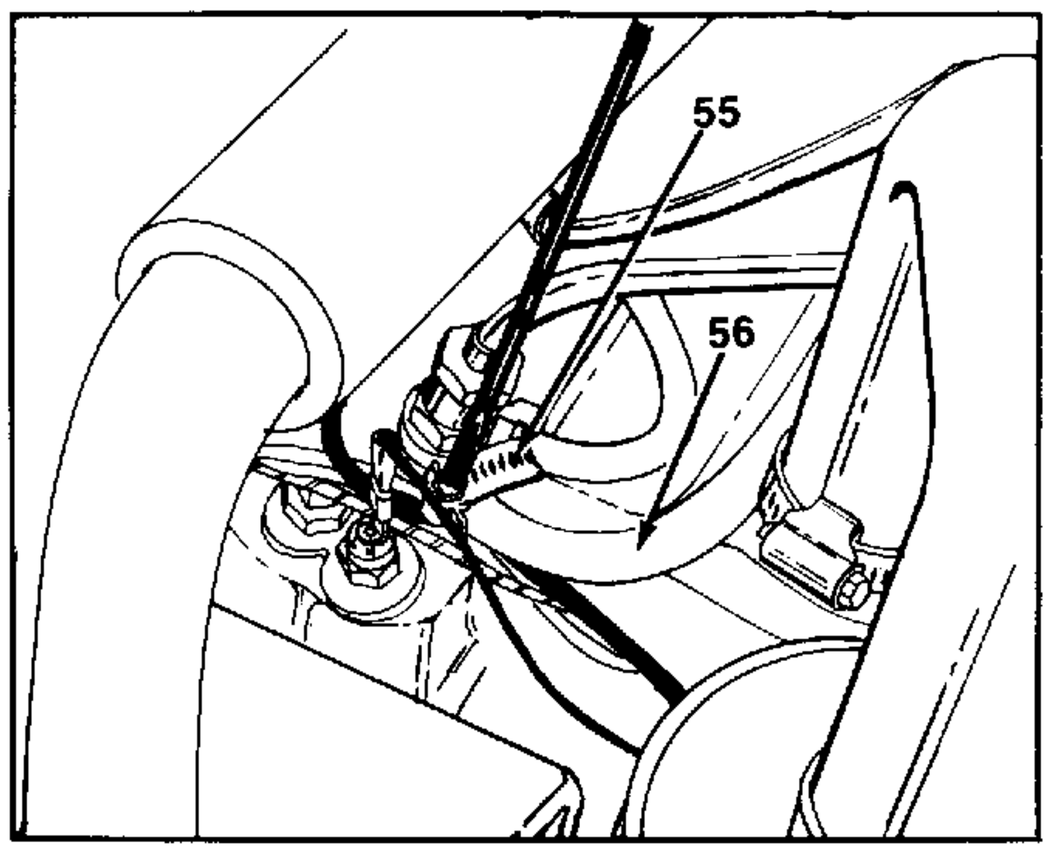

FIGURE 28.

31. Loosen the hose clamp at fuel return line, remove fuel return line. See figure 28.

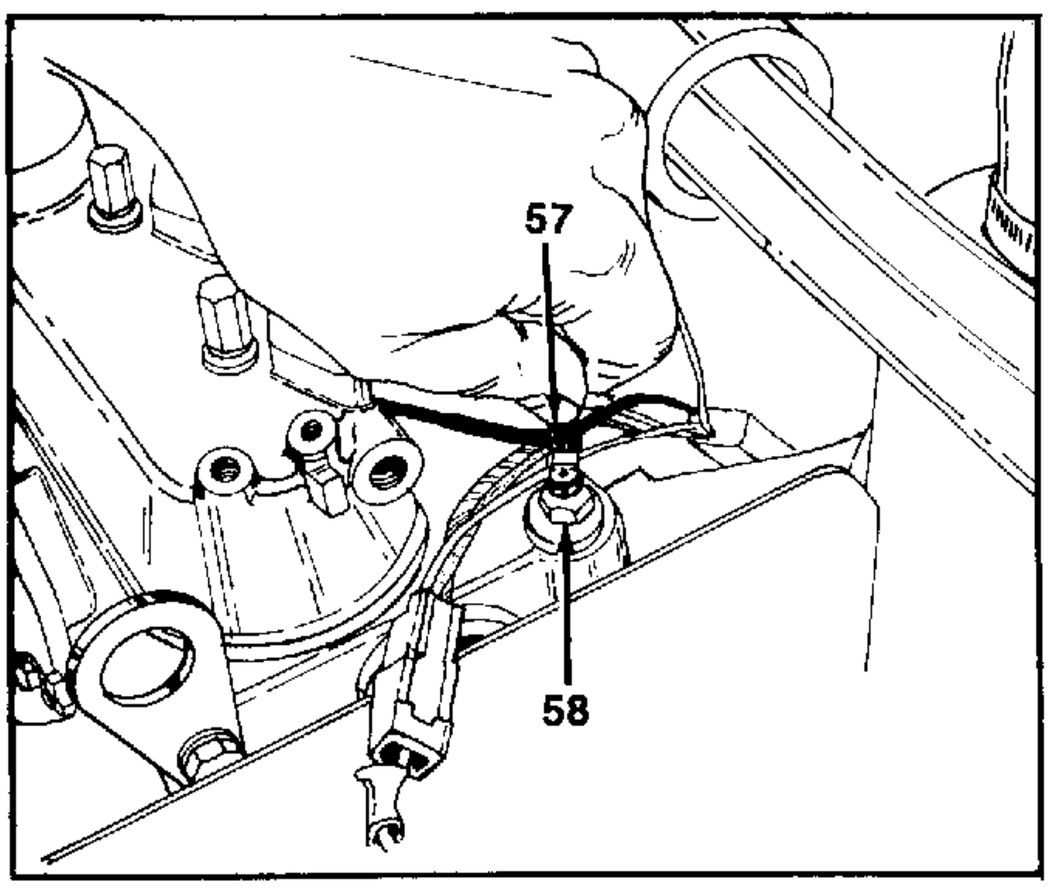

FIGURE 29.

32. Remove the spade terminal at the water temperature sending unit. See figure 29.

53. Glow Plug
54. Glow Plug Wire
55. Hose Clamp
56. Fuel Return Line
57. Spade Terminal
58. Water Temperature Sending Unit

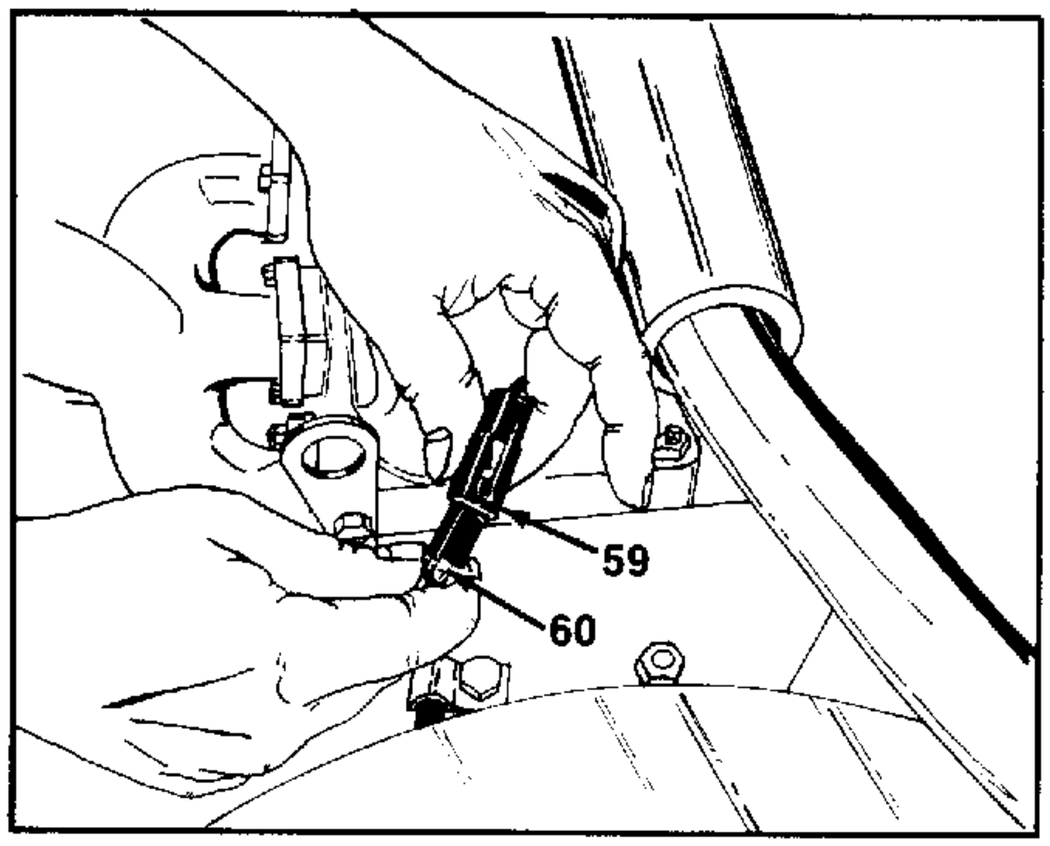

FIGURE 30.

33. Unplug the electric clutch lead from the harness connector. See figure 30.

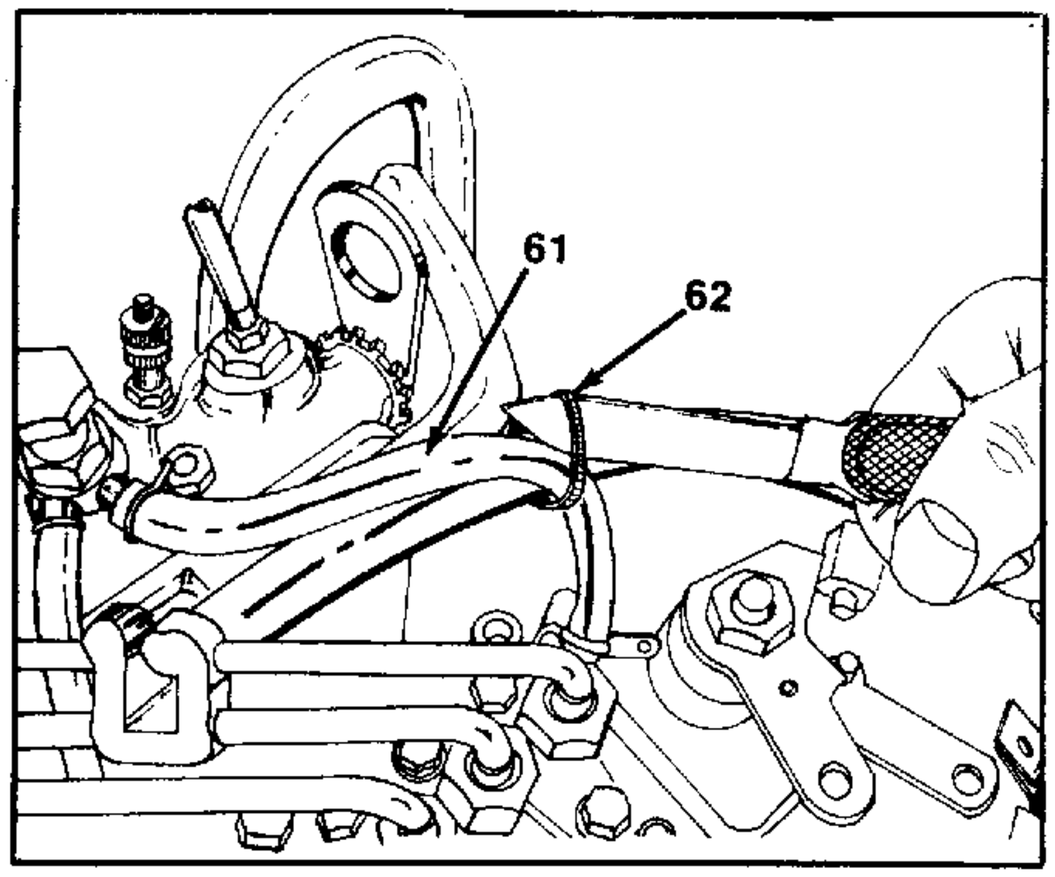

FIGURE 31.

34. Cut the cable tie holding the fuel return line to the radiator hose. See figure 31.

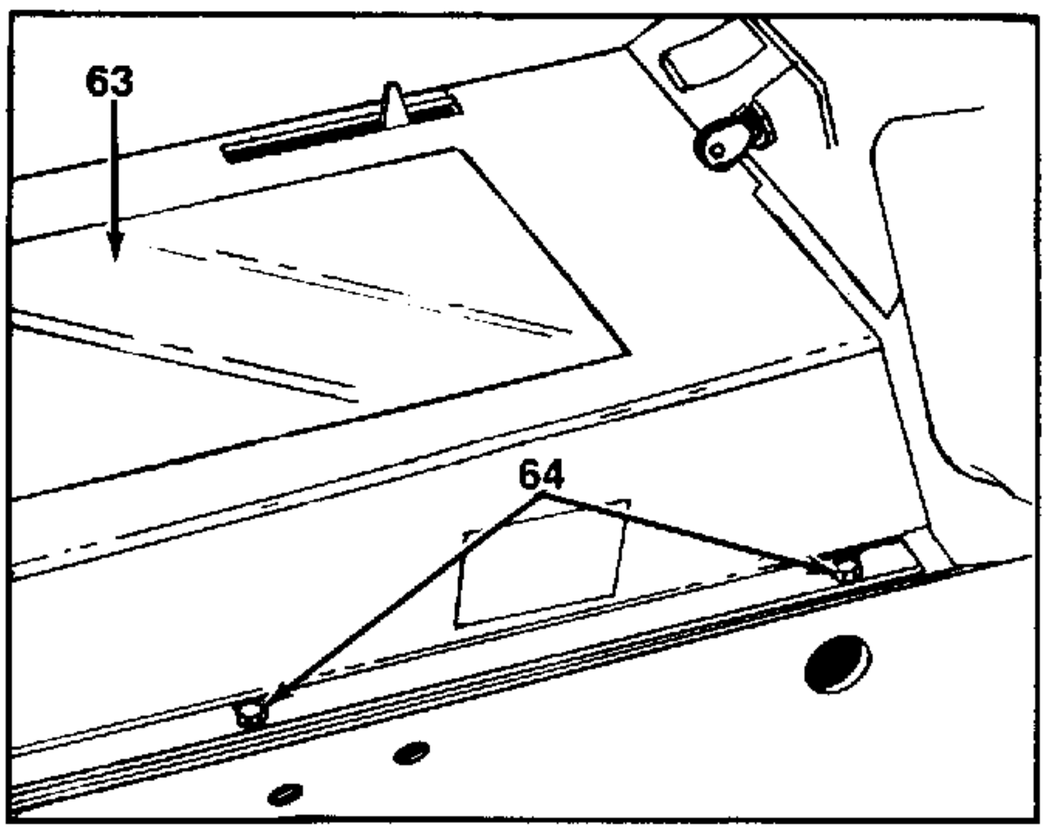

FIGURE 32.

35. Remove the frame cover from the center of tractor, by removing four self-tapping screws. See figure 32.

59. Harness Connector
60. Electric Clutch Lead
61. Fuel Return Line
62. Cable Tie
63. Frame Cover
64. Self-Tapping Screws

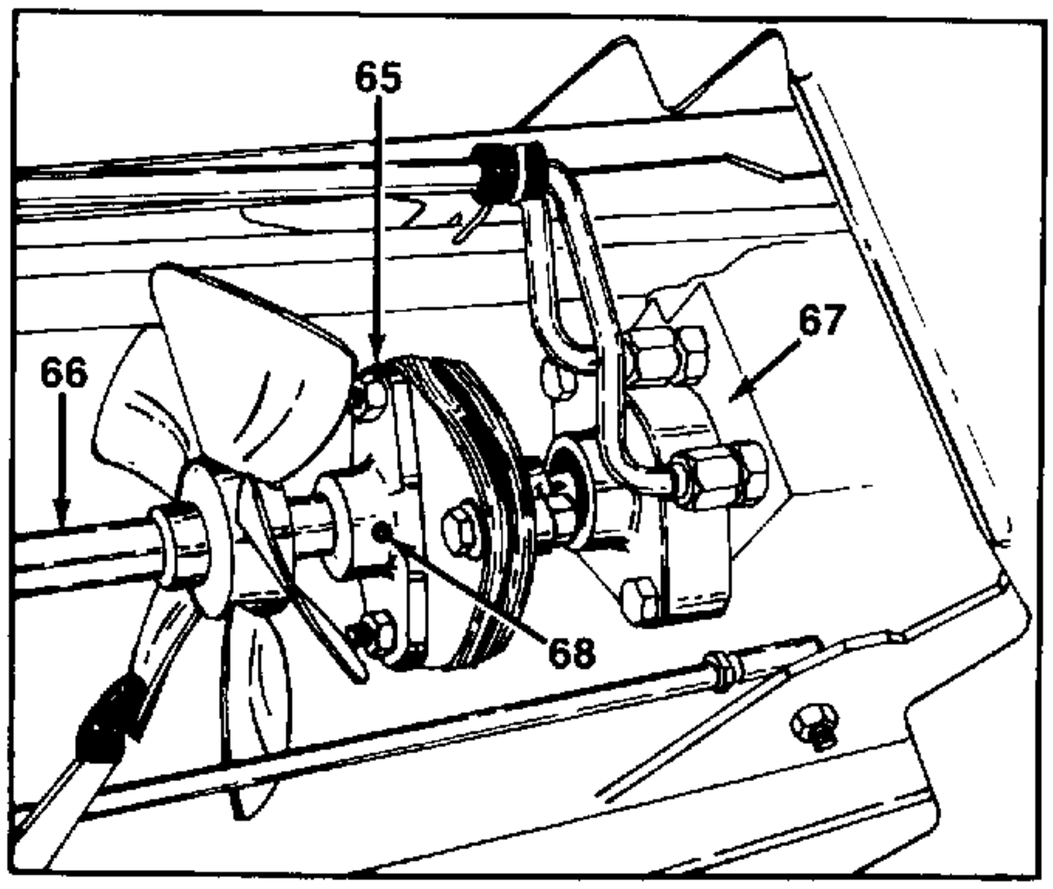

FIGURE 33.

36. Remove the roll pin in the drive shaft flange at the rear of the tractor. See figure 33.

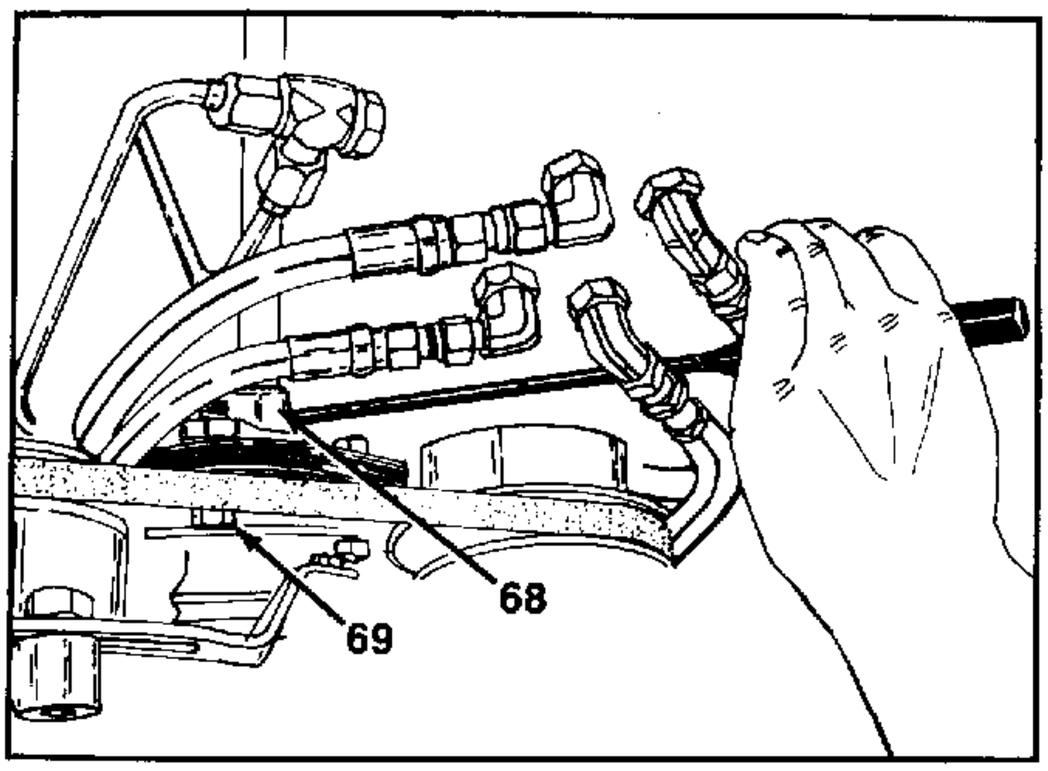

FIGURE 34.

37. Working through the frame cover opening, remove two nuts and washers securing the drive shaft to the drive shaft flange on the crankshaft pulley. See figure 34.

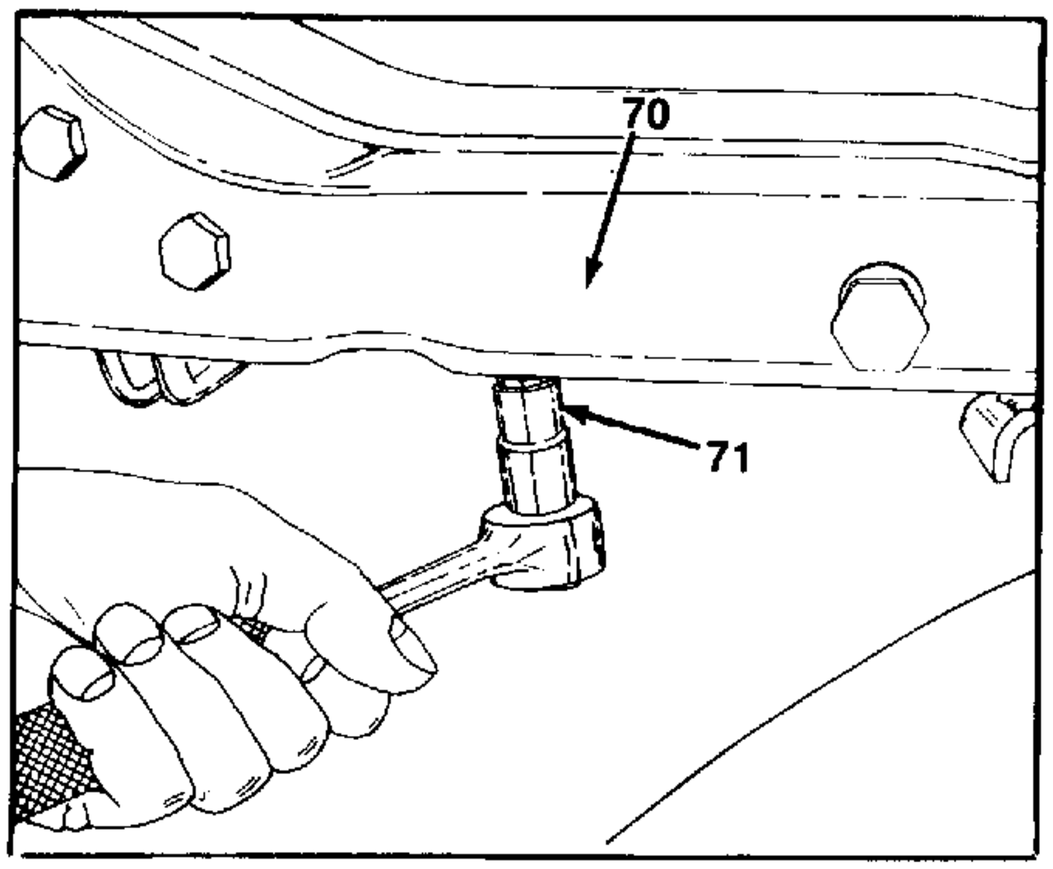

FIGURE 35.

38. Remove (back) hex bolt on each side of frame, holding the engine cradle to the frame. See figure 35.

65.
66. Drive Shaft
67. Pump
68. Roll Pin
69. Hex Bolts and Hex Nuts
70. Frame
71. (Back) Hex Bolt

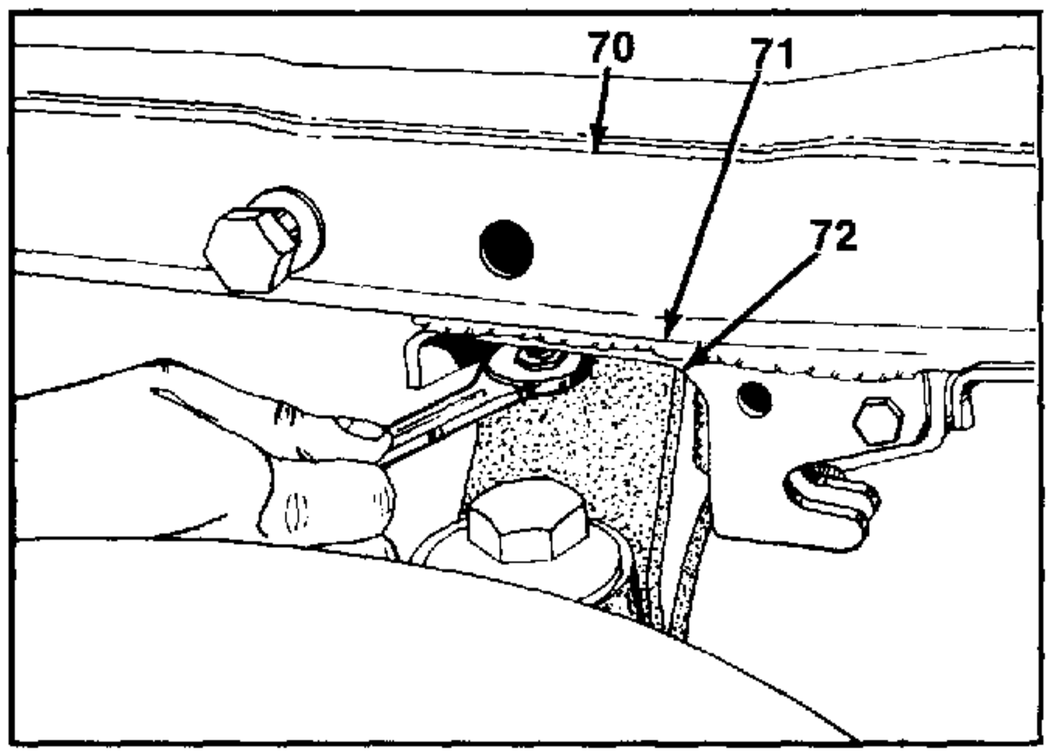

FIGURE 36.

39. Remove the (front) hex bolt, hold the engine cradle to the frame. See figure 36. Note: An open end wrench will be required, because the bolt is just above the pivot bar. See figure 36.

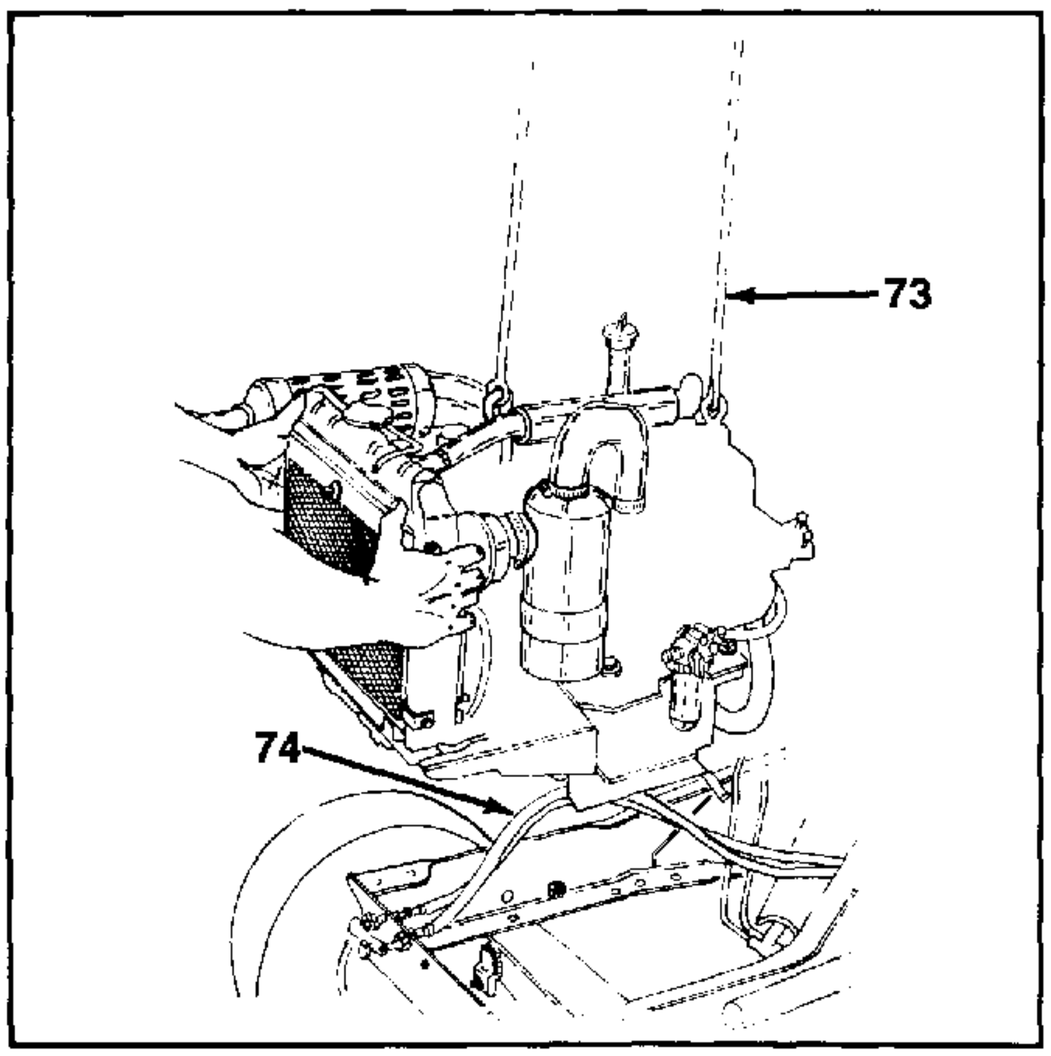

FIGURE 37.

40. Attach a suitable hoist and chain to the engine lifting eyes. See figure 37.
41. Slide the engine and radiator mount forward to disengage the drive shaft. Raise the engine from the tractor frame; be careful of the front P.T.O. hoses. See figure 37.

70. Frame
71. (Front) Hex Bolt
72. Pivot Bar
73. Hoist
74. Front P.T.O. Hoses

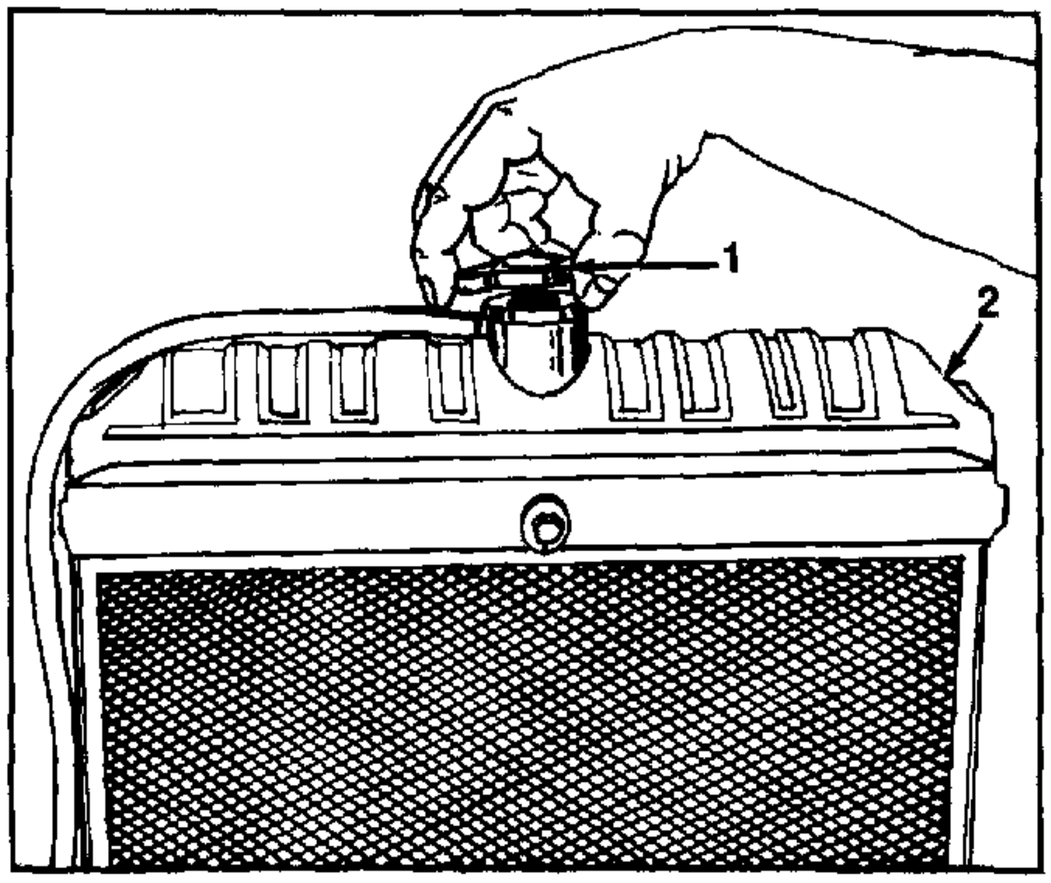

FIGURE 1.

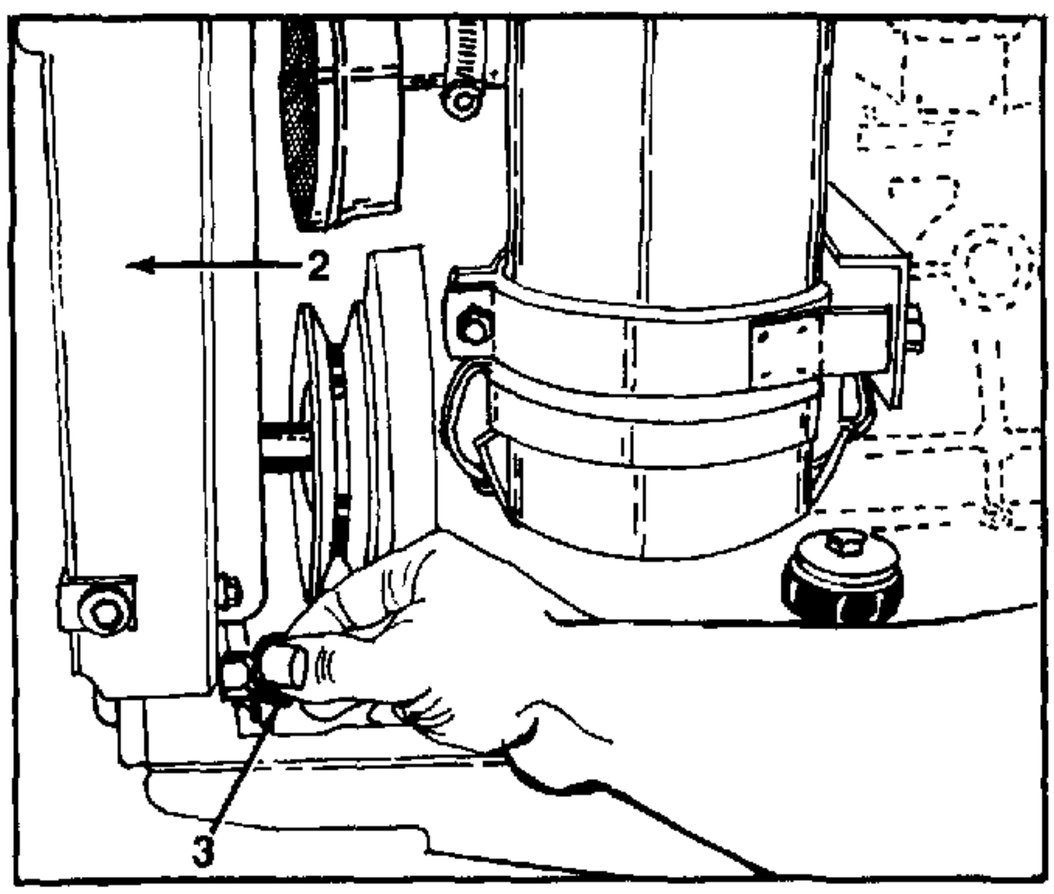

FIGURE 2.

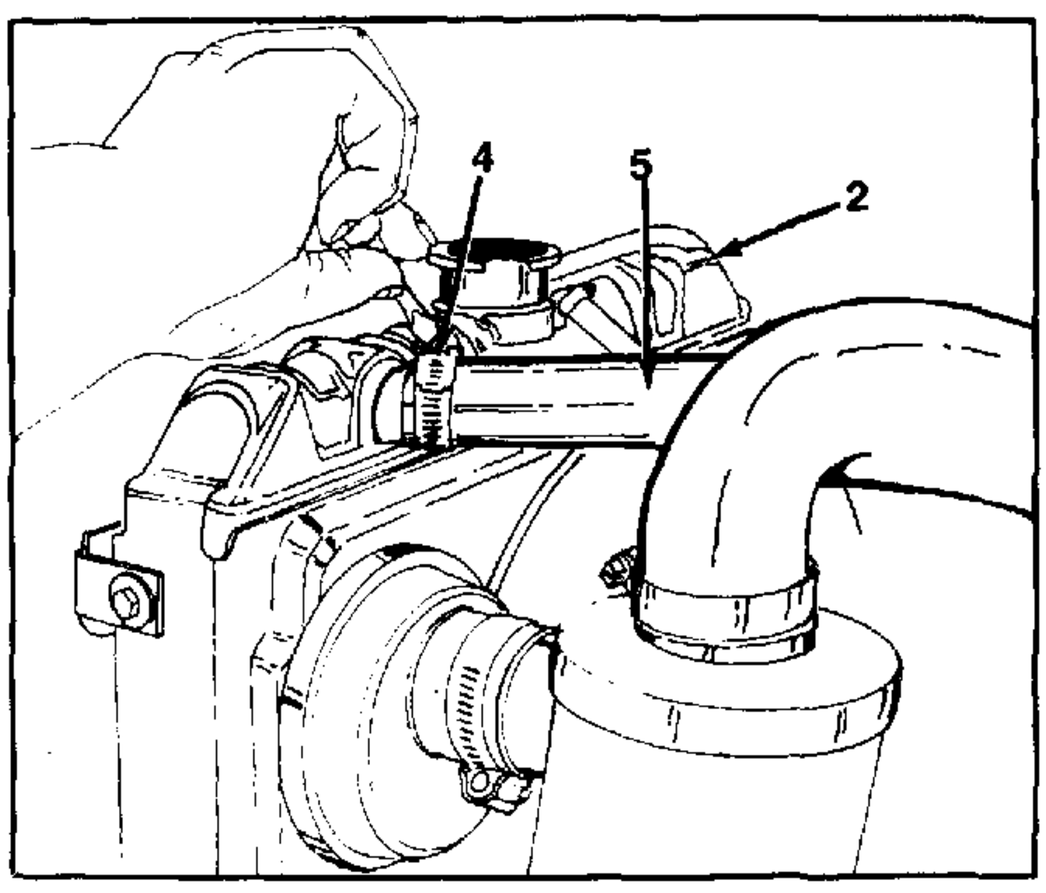

FIGURE 3.

POWER UNIT DISASSEMBLY FOR: 15 H.P. DIESEL

1. Support the power unit on suitable blocking on a stable workbench. Leave the hoist attached to the engine.
2. Remove the radiator cap. See figure 1.

3. Drain the radiator and open the drain cock. See figure 2.

4. Loosen the clamps on the radiator upper hose and remove the upper hose. See figure 3.

1	Radiator Cap
2	Radiator
3	Drain Cock
4	Hose Clamp
5	Radiator Hose (Top)

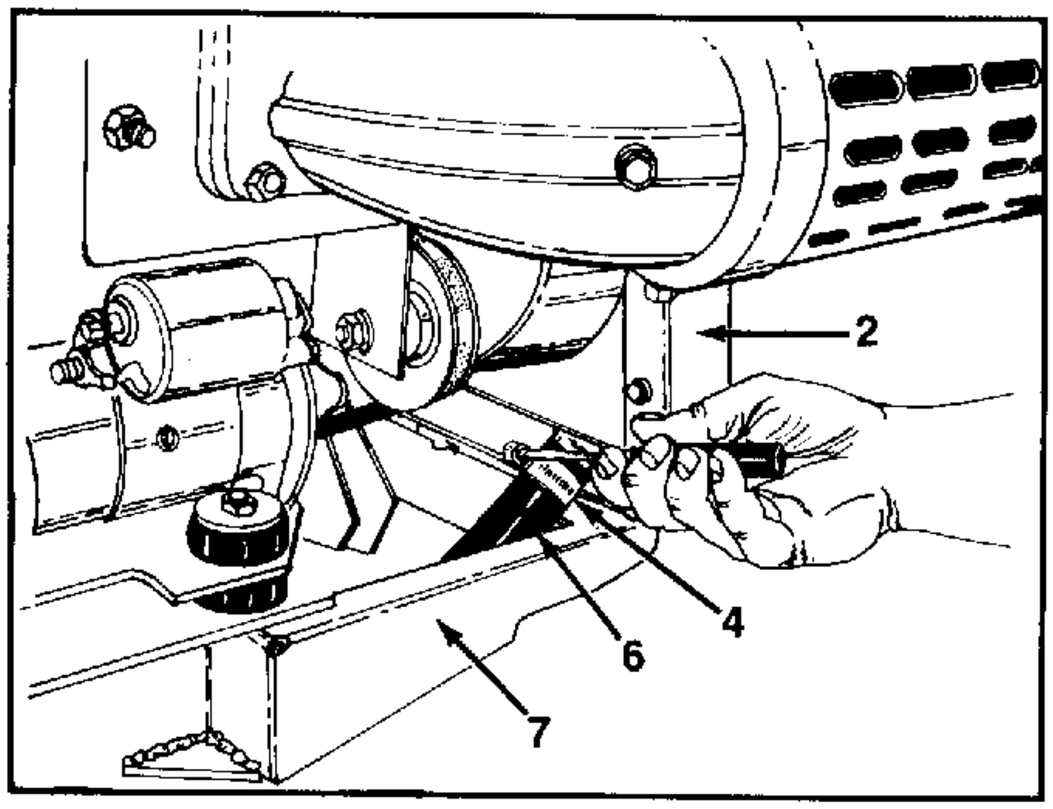

FIGURE 4.

5. Loosen the clamp on the radiator lower hose and remove the hose end from the radiator. See figure 4.

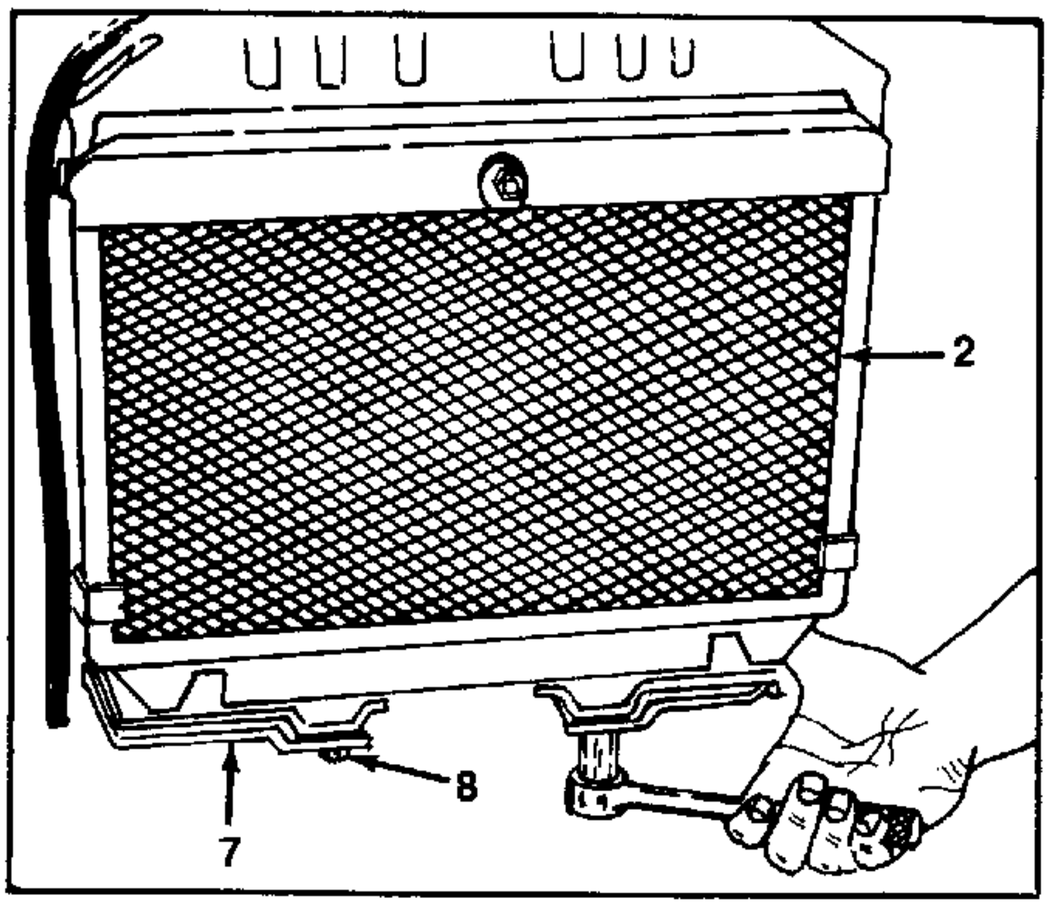

FIGURE 5.

6. Remove the two 17mm bolt and lock washers from the bottom of radiator and engine craddle. See figure 5.

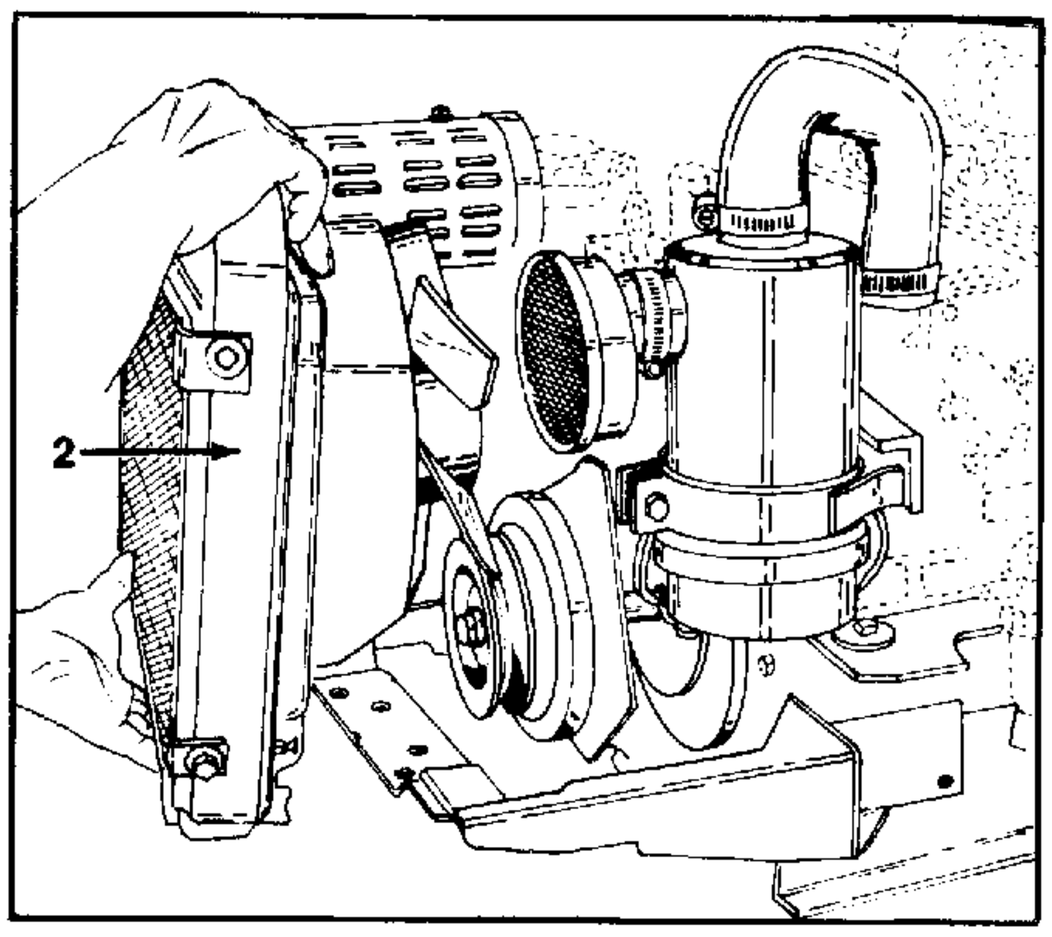

FIGURE 6.

7. Remove radiator with screen, lift outward and off. See figure 6.

2 Radiator
4 Hose Clamp
6 Radiator Hose (Bottom)
7 Engine Craddle
8 17mm Hex Bolts and Lock Washers

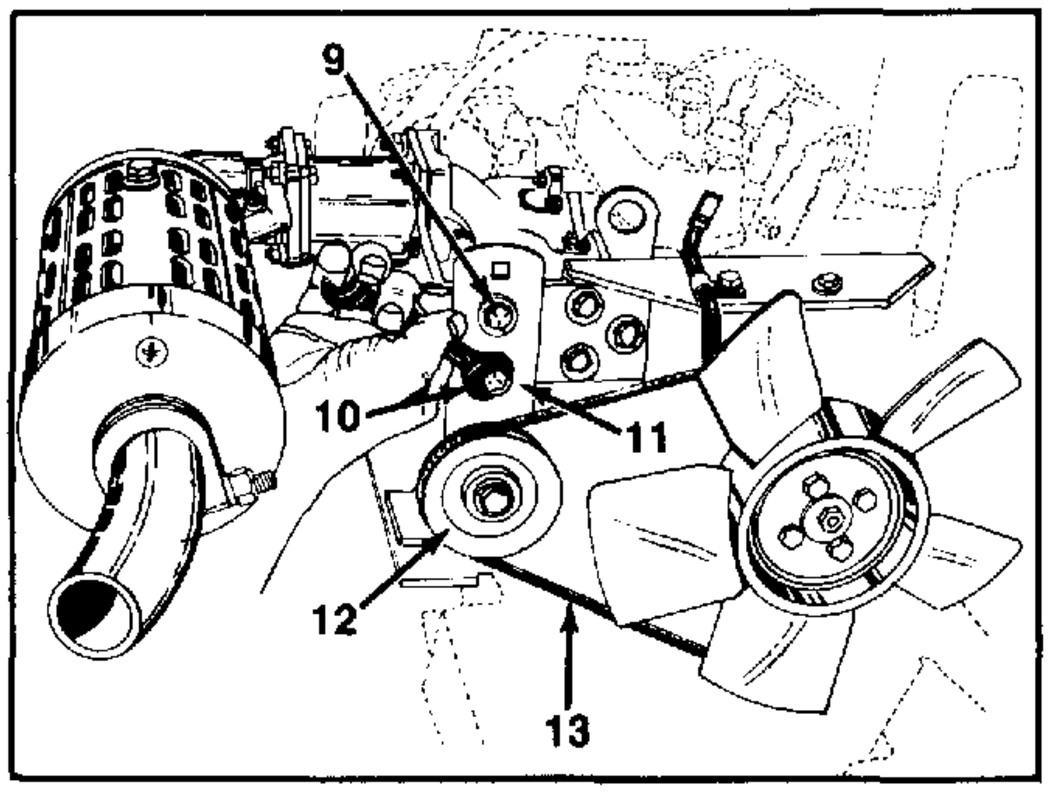

FIGURE 7.

8. Loosen the adjusting lock bolt and pivot bolt at the idler bracket. See figure 7.

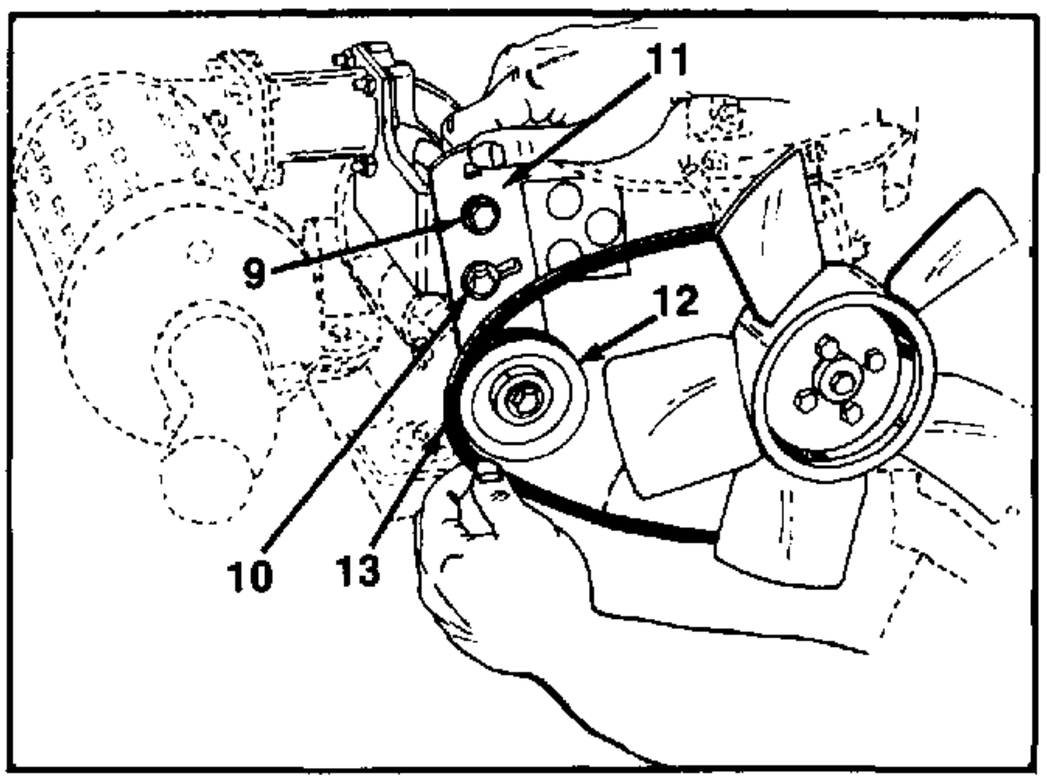

FIGURE 8.

9. Pivot the idler pivot bracket and idler pulley towards the fan and remove the fan drive belt. See figure 8.

10. Remove hex bolts securing the fan and fan drive support from the support bracket. See figure 9.

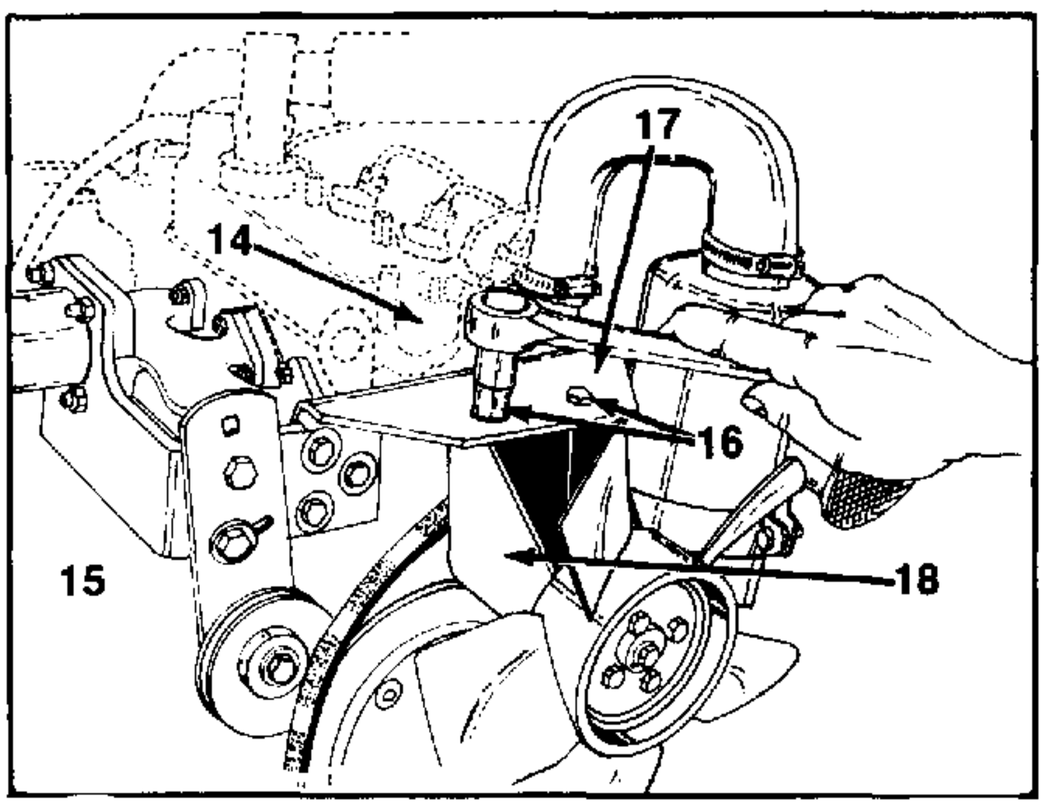

FIGURE 9.

NOTE

Upon reassembly of fan drive support, re-install the cable clip, holding the wire for P.T.O. clutch. See figure 9.

9	Pivot Bolt
10	Adjusting Lock Bolt
11	Idler Pulley Bracket
12	Idler Pulley
13	Fan Drive Belt
14	Wire Connector for Clutch
15	Cable Clamp
16	Hex Bolts for Support Bracket
17	Support Bracket
18	Fan Drive Support

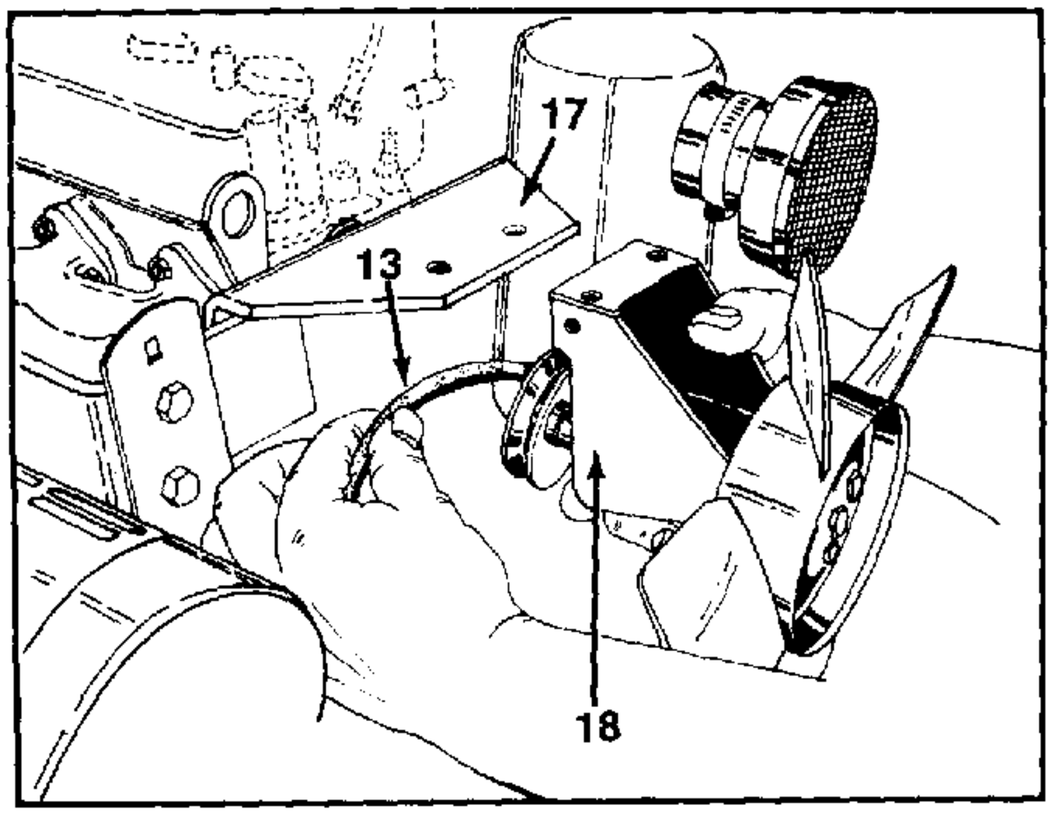

FIGURE 10.

11. Lift the fan drive support out and remove the fan drive belt. See figure 10.

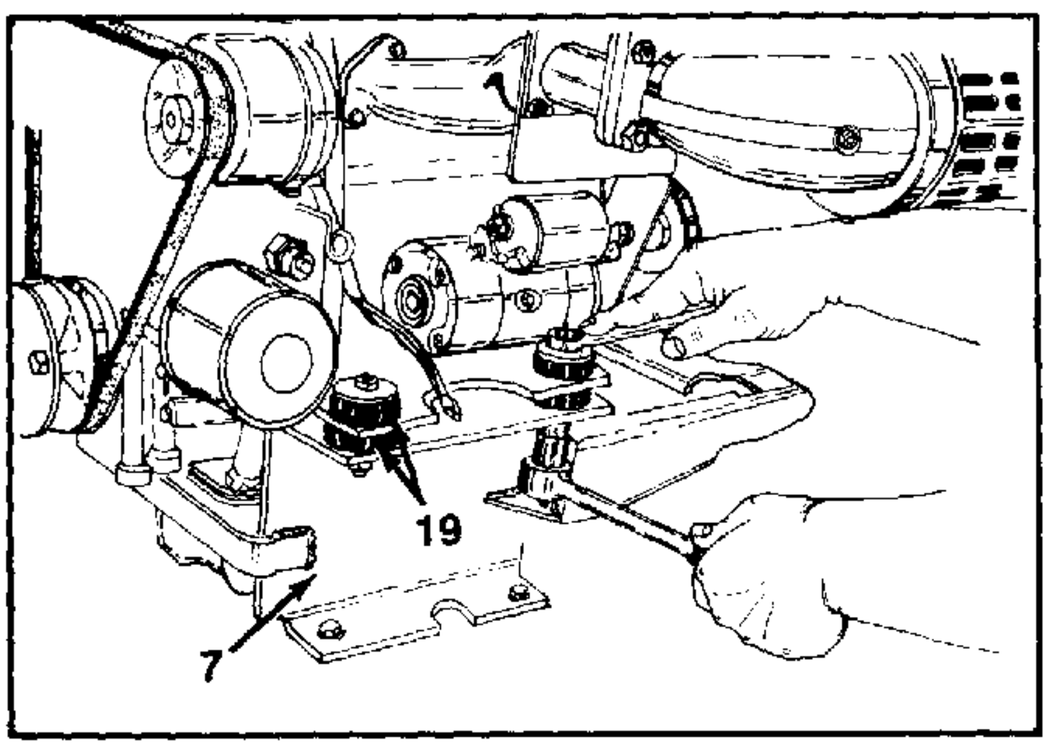

FIGURE 11.

12. Remove the four iso/mounts from engine and engine craddle. See figure 11.

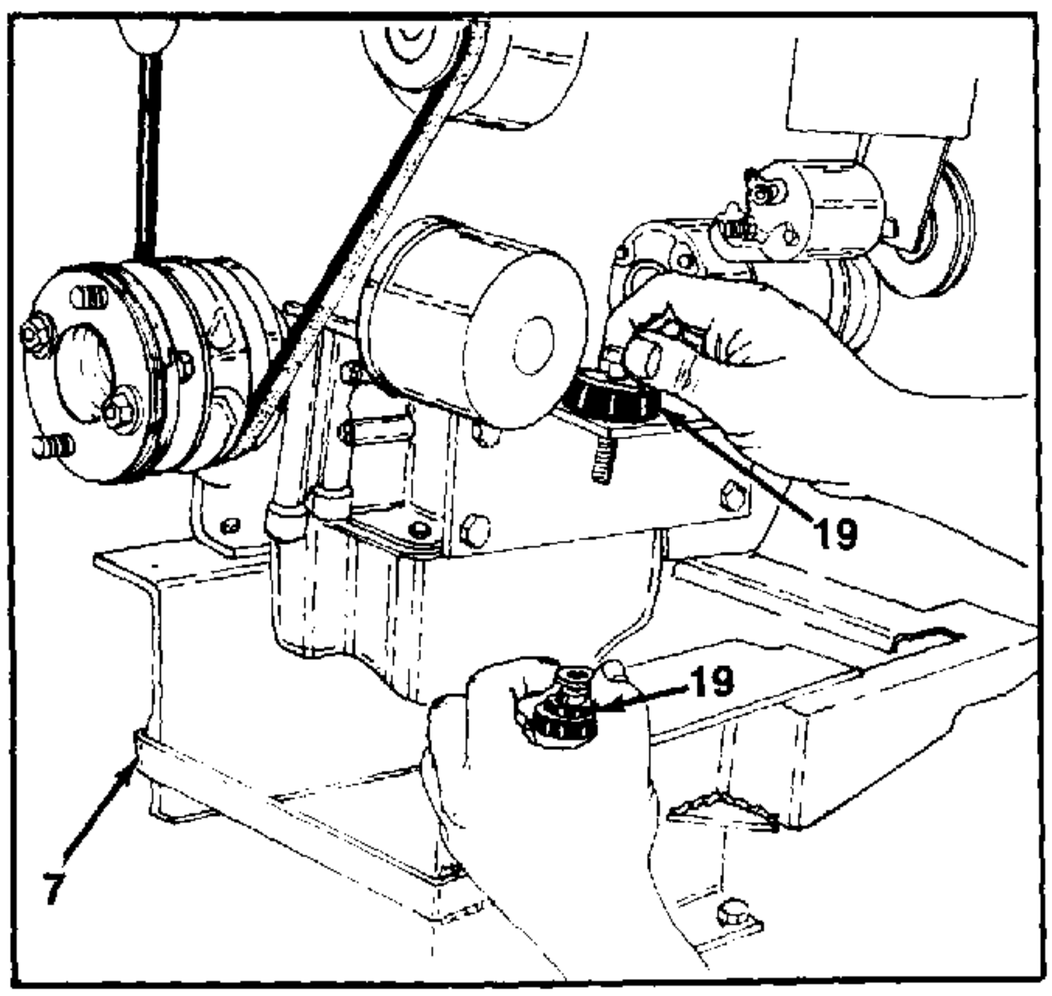

FIGURE 12.

NOTE

Upon reassembly of iso/mounts to engine and engine craddle, refer to figures 12 and 13 for correct order.

7	Engine Craddle
13	Fan Drive Belt
17	Support Bracket
18	Fan Drive Support
19	Engine iso/mounts

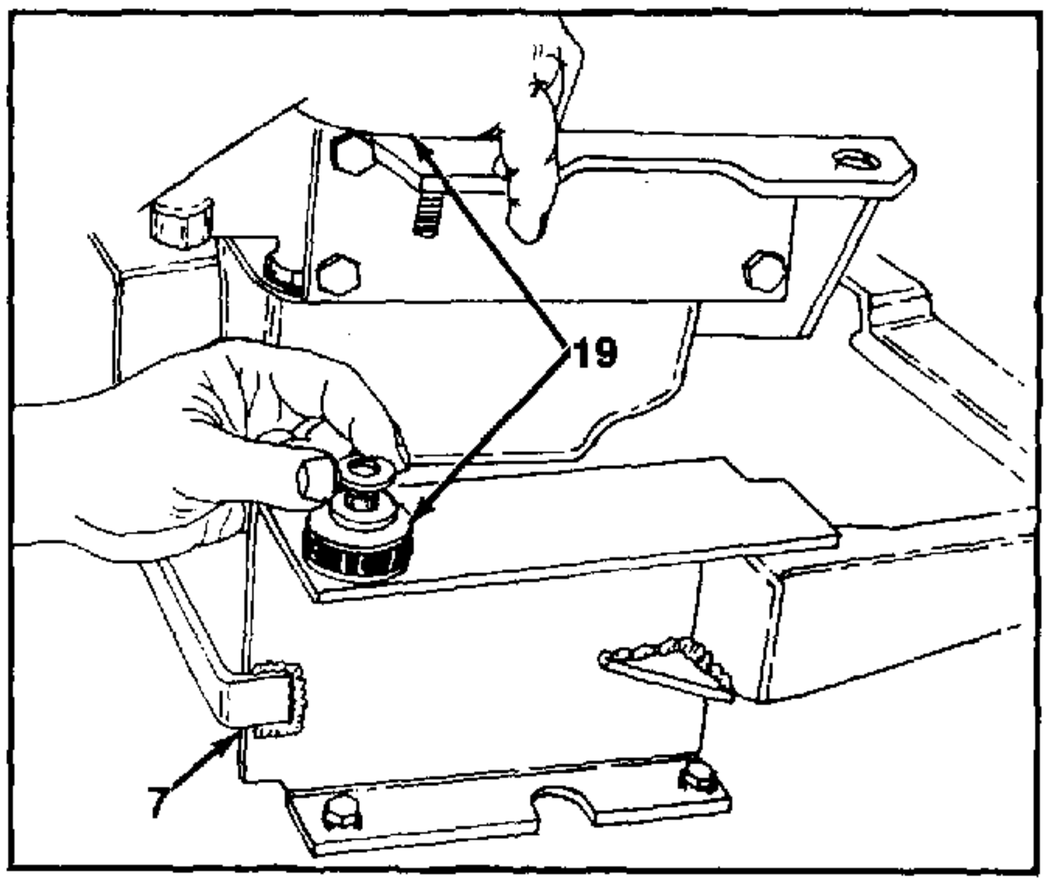

FIGURE 13.

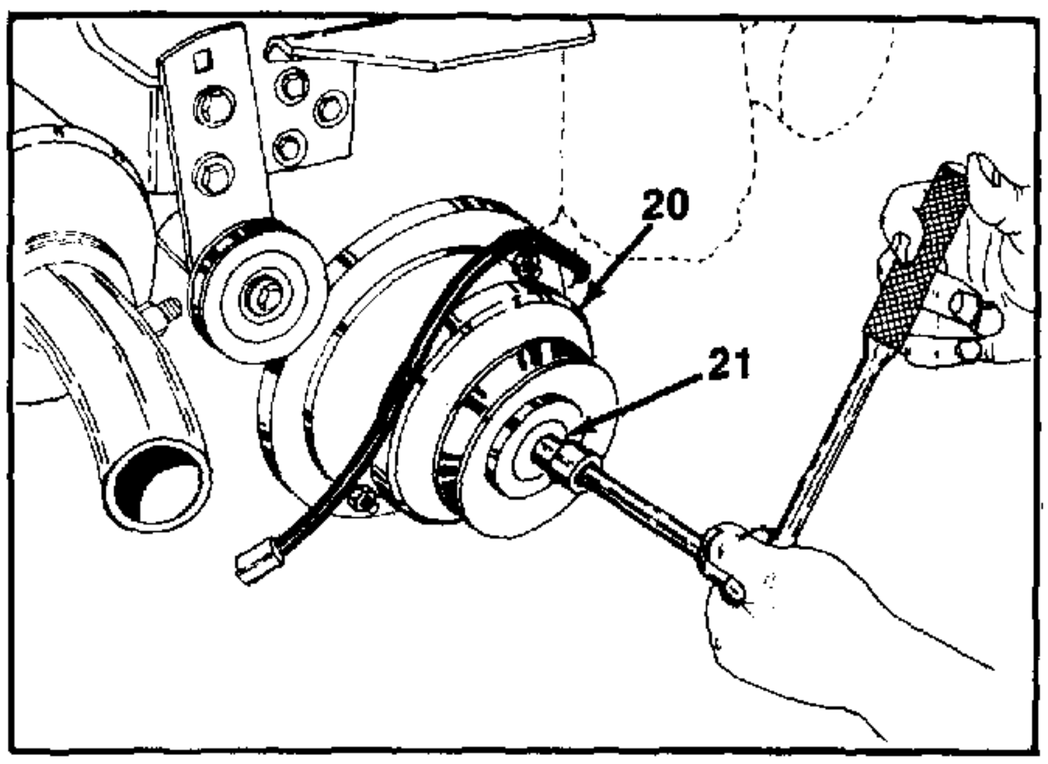

FIGURE 14.

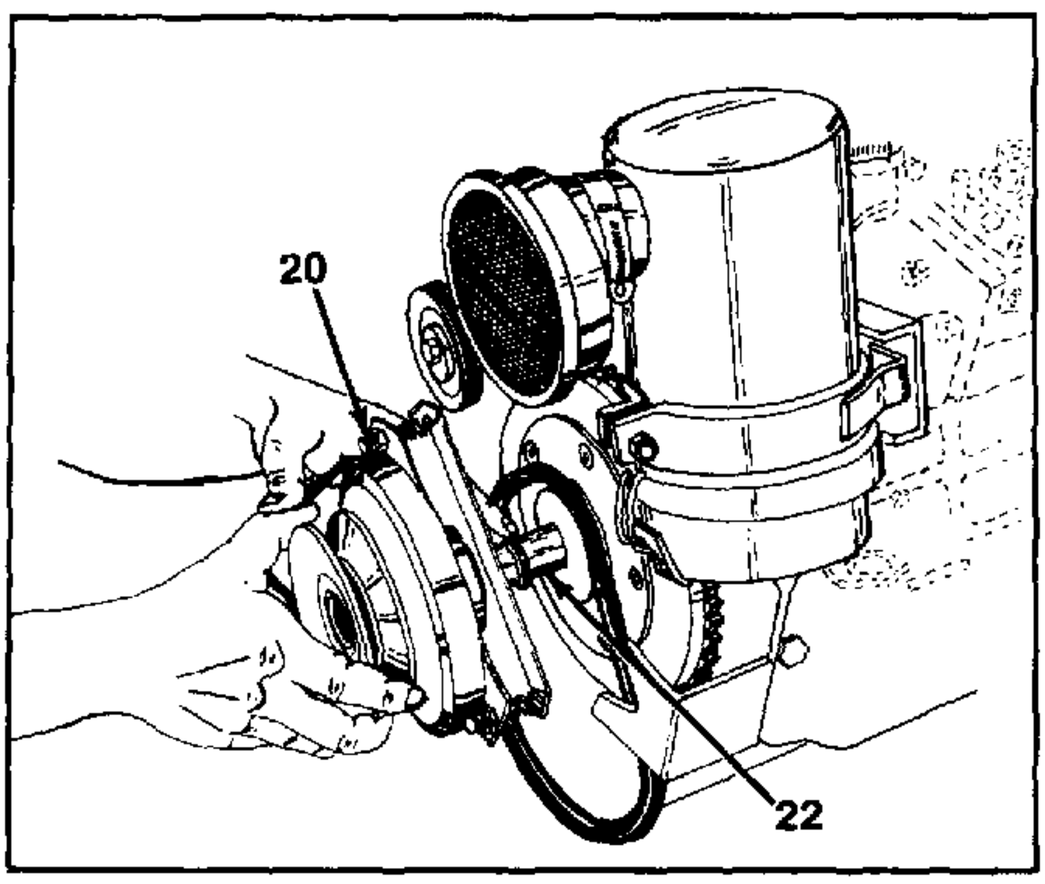

FIGURE 15.

13. Remove the hex bolt, lock washer and flat washer holding the P.T.O. clutch to stub shaft. See figure 14.

14. Slide the P.T.O. clutch off to stub shaft. See figure 15.

7	Engine Craddle
19	Engine Mounts
20	P.T.O. Clutch Assembly
21	Bolt, Lock Washer and Flat Washer
22	Stub Shaft

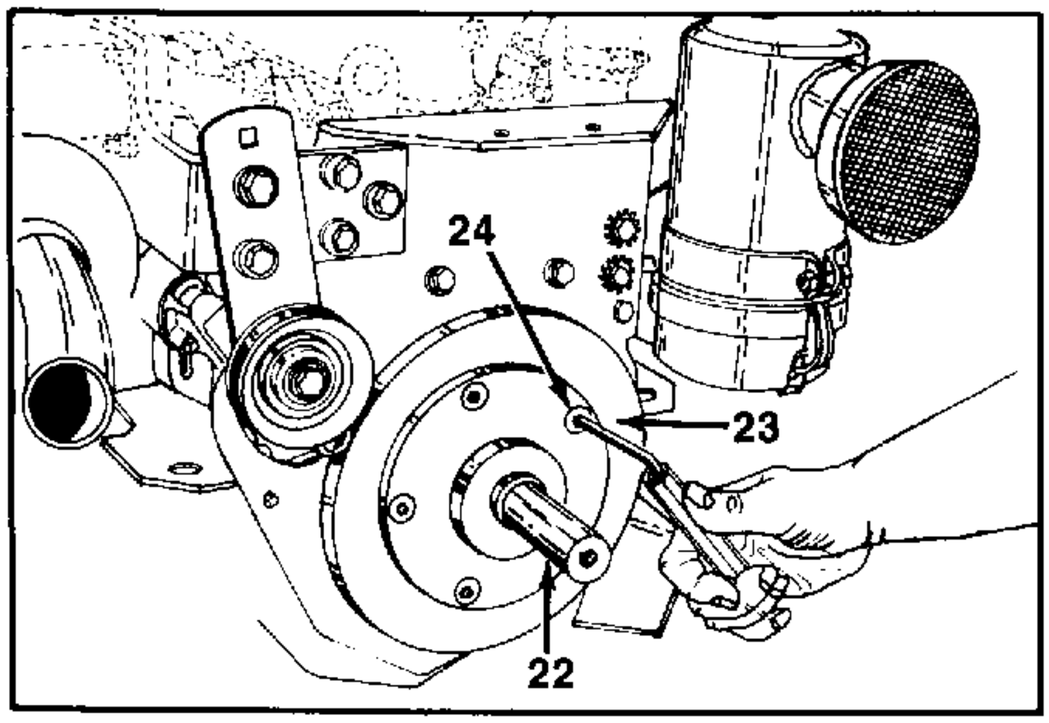

FIGURE 16.

15. Remove the five screws holding the stub shaft to fly wheel. See figure 16. Note an allen wrench with a piece of pipe will be required to break screws loose. See figure 16.

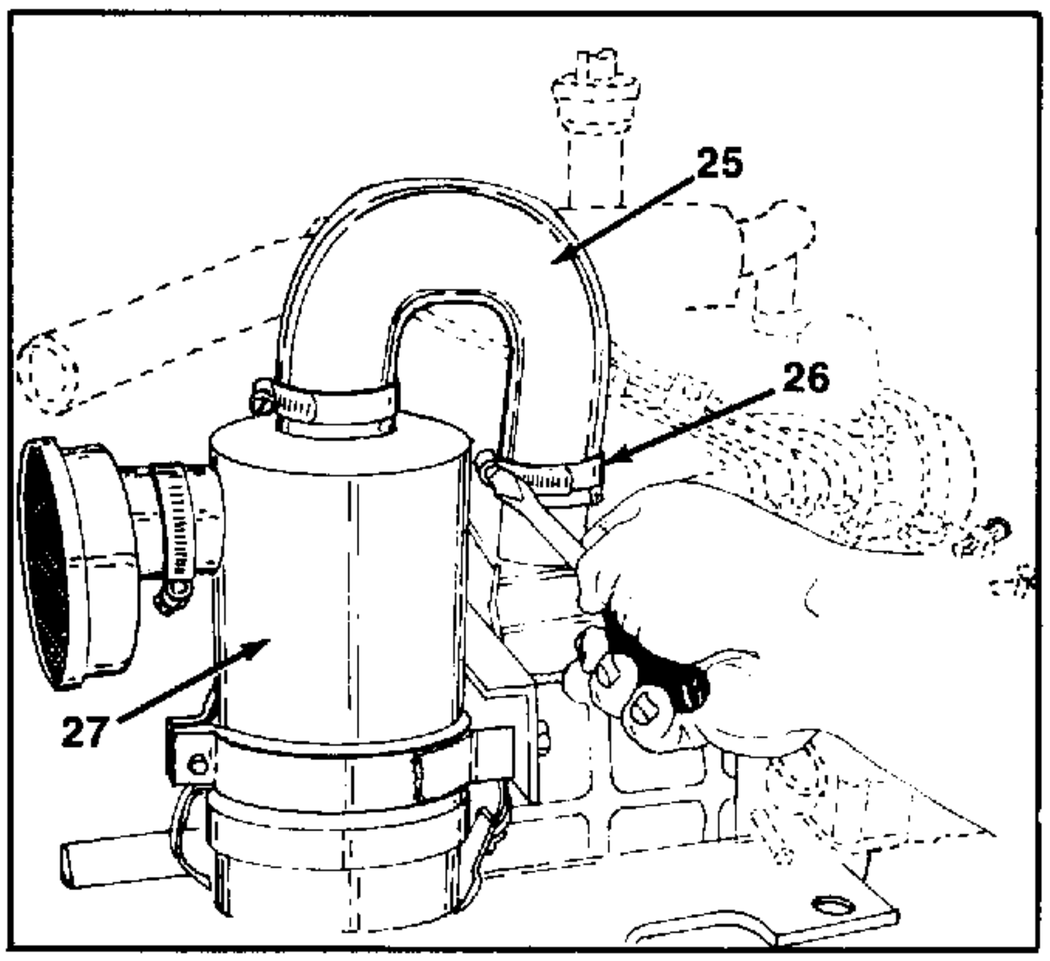

FIGURE 17.

16. Loosen the hose clamps on air cleaner hose, remove air cleaner hose. See figures 17 and 18.

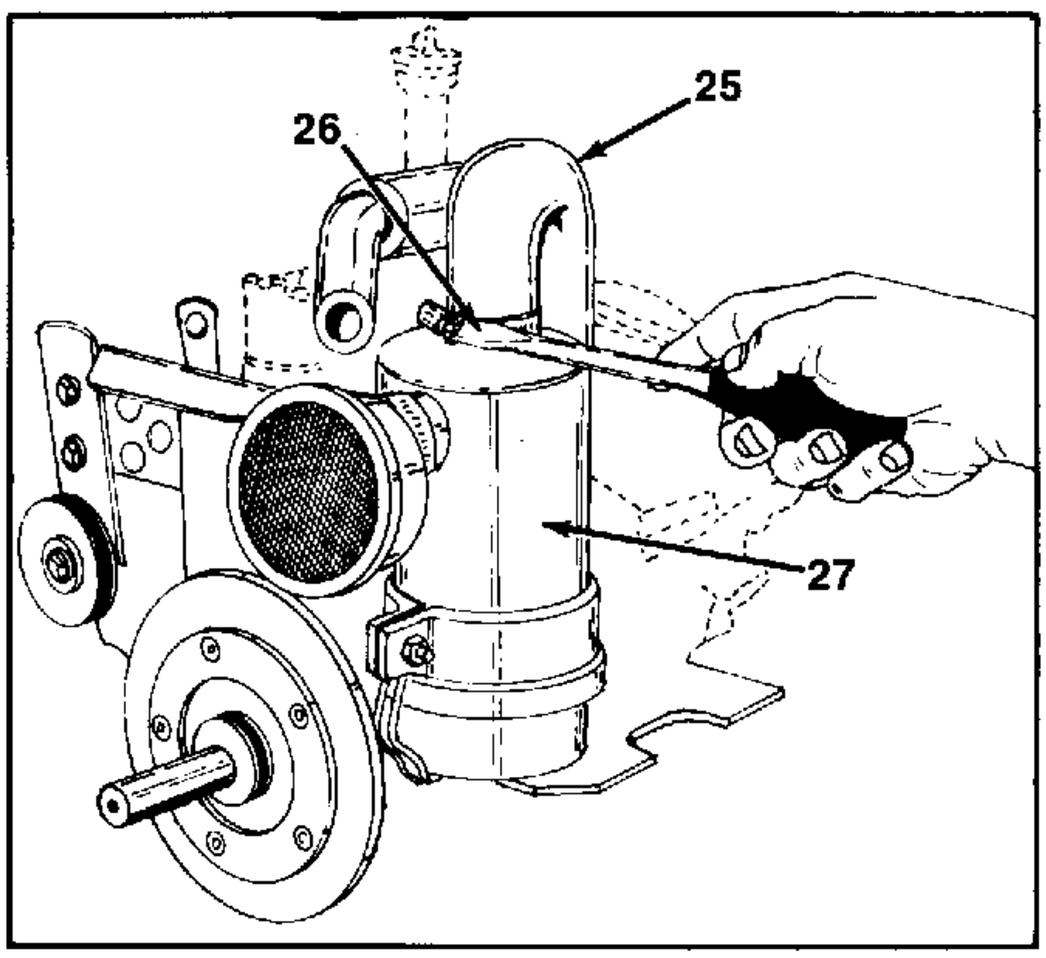

FIGURE 18.

22	Stub Shaft
23	Flywheel
24	Screws (5)
25	Air Cleaner Hose
26	Hose Clamps
27	Air Cleaner

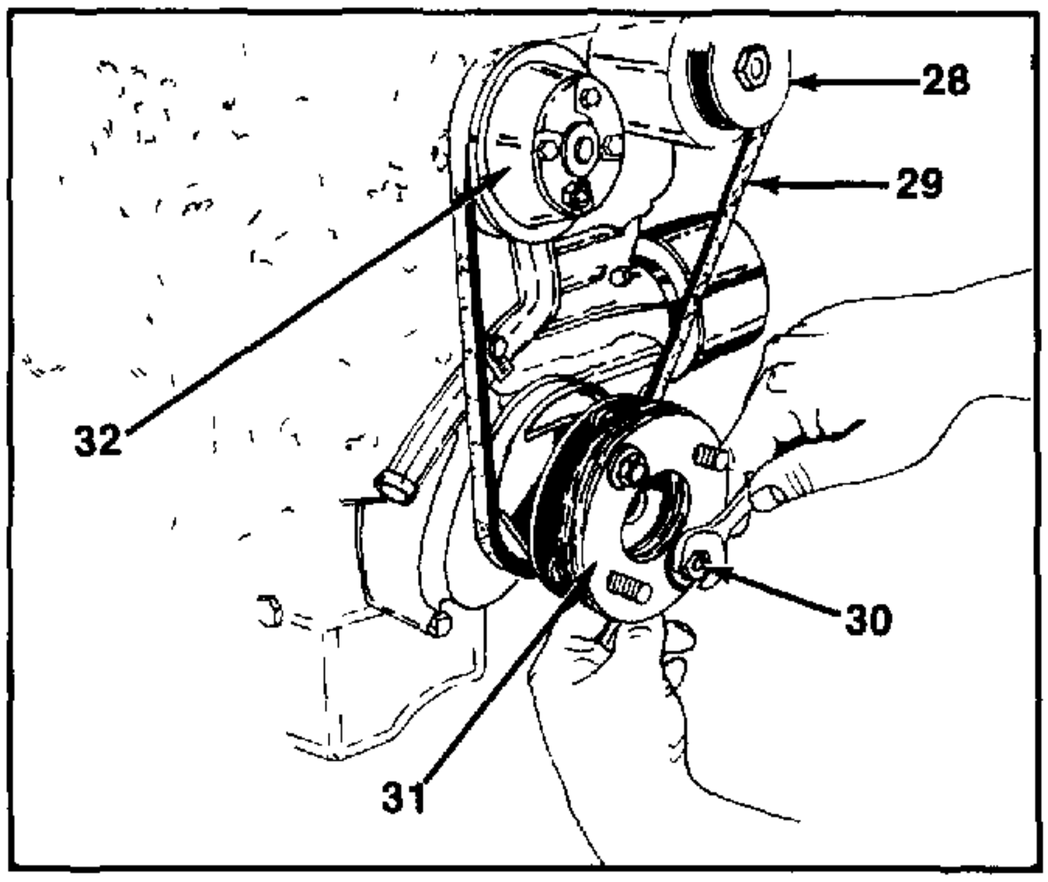

FIGURE 19

17 Remove two hex nuts and flat washers from the flexible coupling, slide the flexible coupling from the drive shaft flange See figure 19

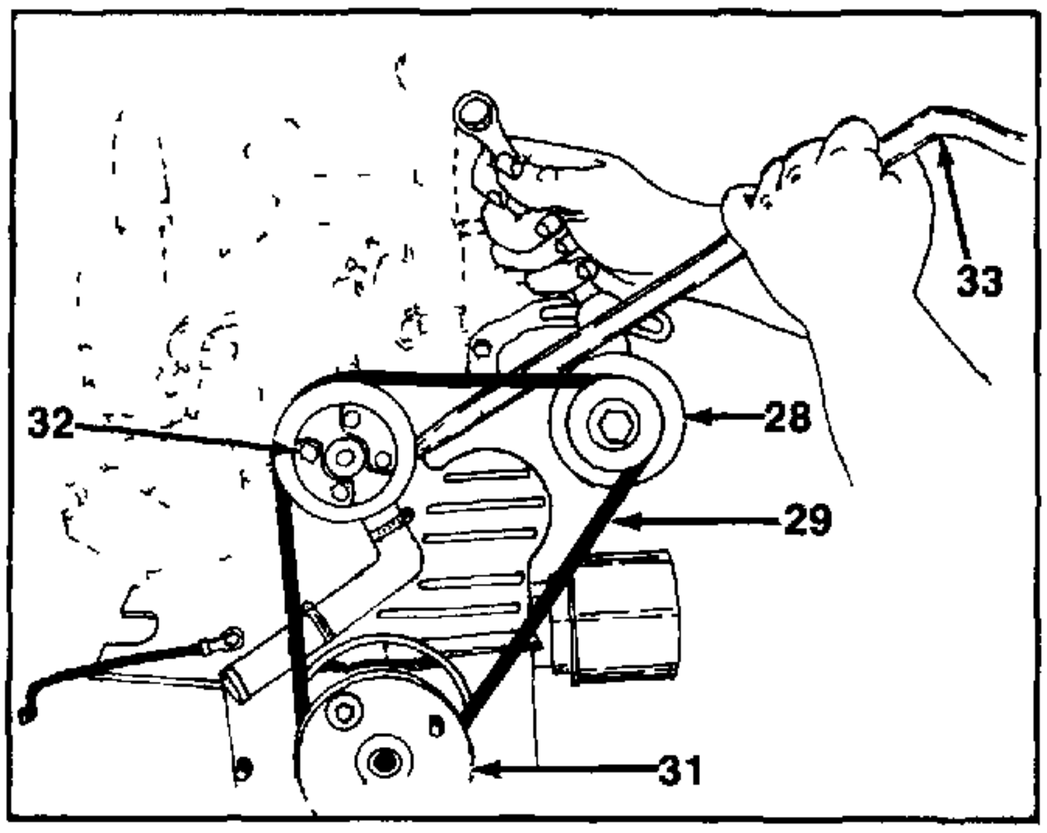

FIGURE 20

18 With a pry bar and wrench loosen the hex bolt at alternator bracket See figure 20 Remove the alternator belt

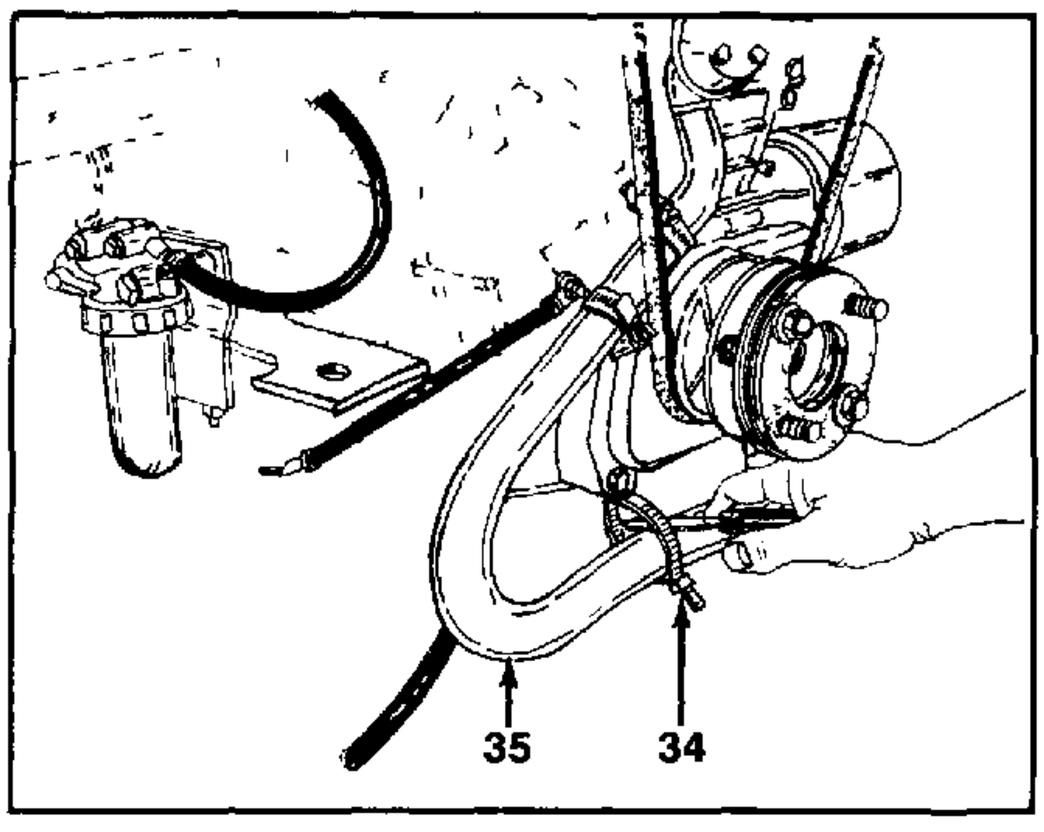

FIGURE 21

19 Cut the cable tie at the lower radiator hose See figure 21

28 Alternator
29 Alternator Belt
30 Nut and Flat Washer
31 Flexible Coupling
32 Water Pump Pulley
33 Pry Bar
34 Cable Tie
35 Lower Radiator Hose

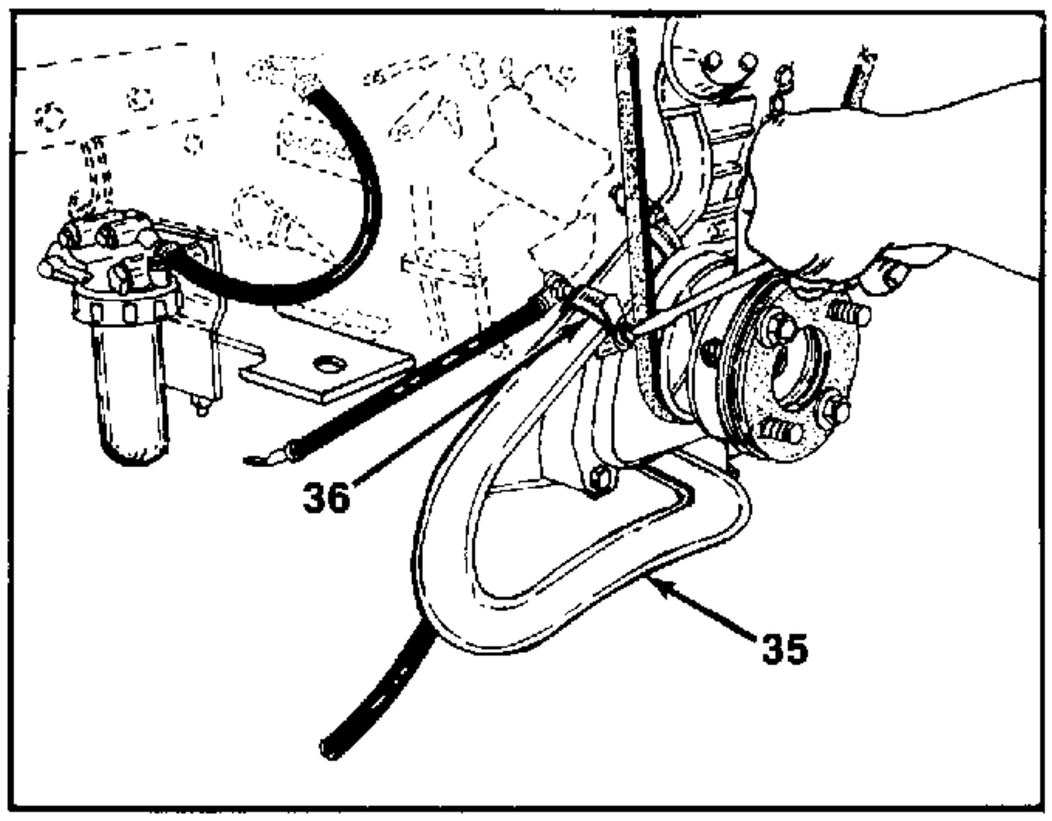

FIGURE 22.

20. Loosen the hose clamp at lower radiator hose and remove hose. See figure 22.

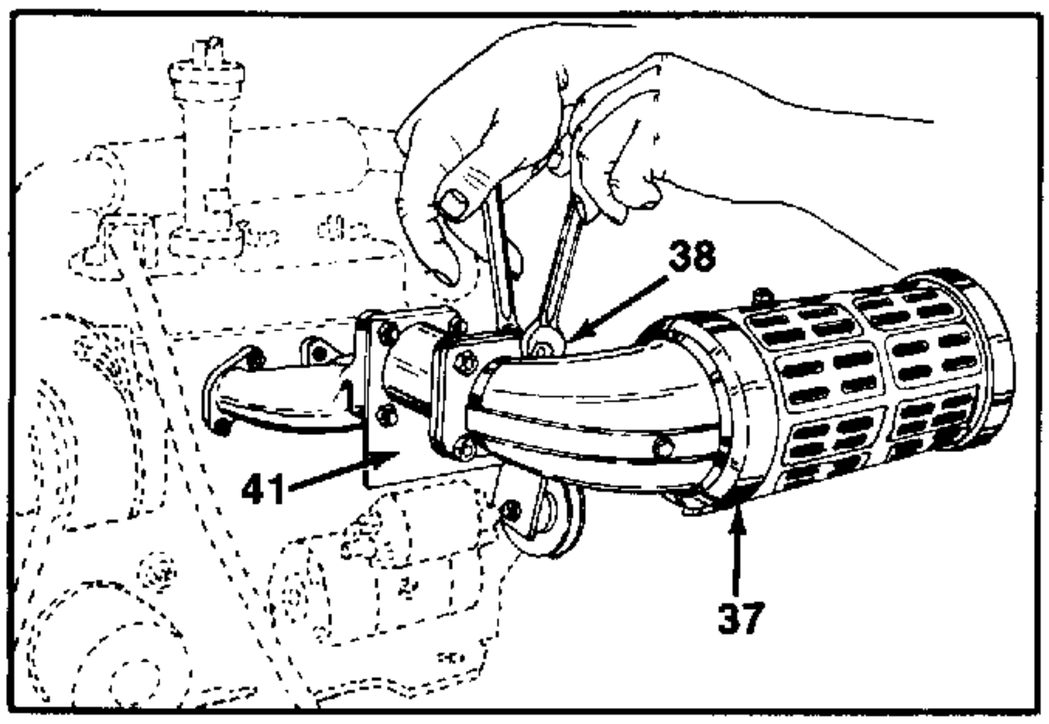

FIGURE 23.

21. Remove the four hex bolts and nuts from muffler and exhaust extension. See figure 23.

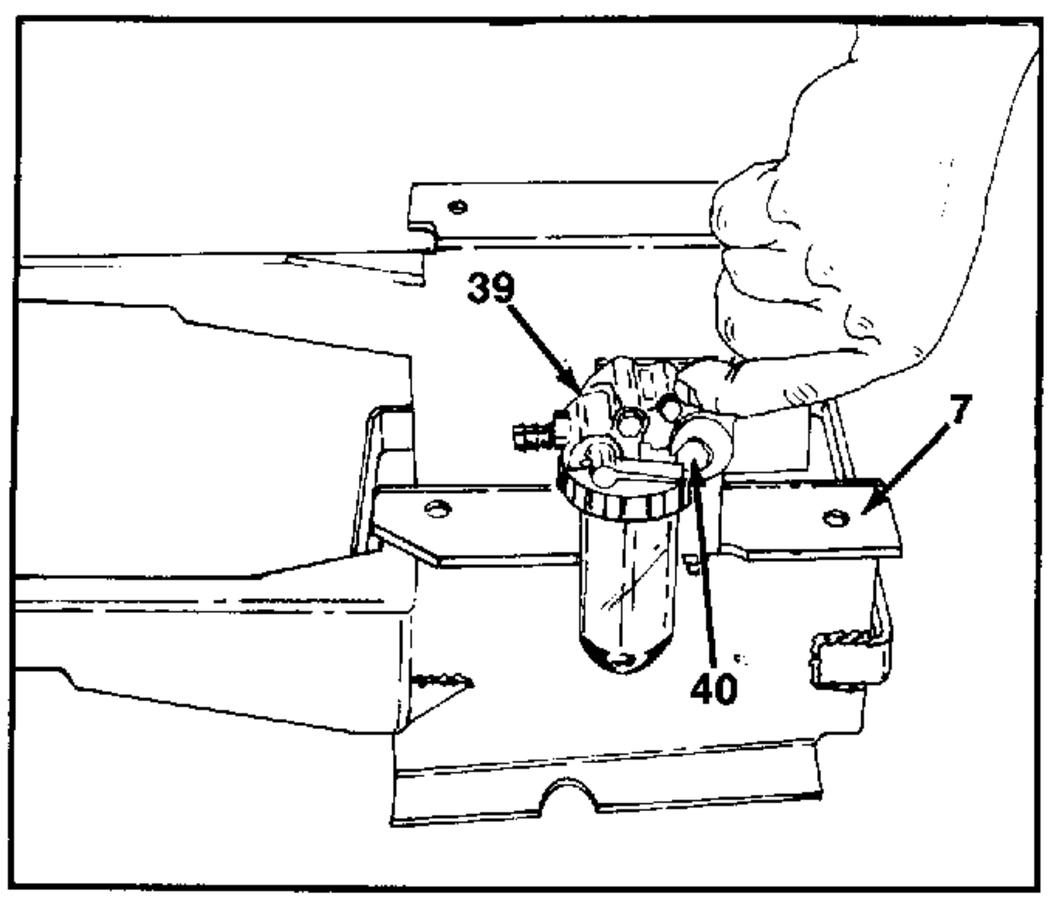

FIGURE 24.

22. Remove the secondary fuel filter from the engine craddle, by removing one hex bolt. See figure 24.

7	Engine Craddle
35	Lower Radiator Hose
36	Hose Clamp
37	Muffler
38	Hex Bolt and Nut
39	Secondary Fuel Filter
40	Hex Bolt
41	Exhaust Extension

OVERHEATING OF DIESEL ENGINE

1. Clean radiator screen.
2. Clean radiator core.
3. Side panels must have nuts on bottom.
4. Do not mistake normal overflow from heat expansion hose with boiling over.
5. Verify radiator coolant (minimum 50/50 solution of ethylene glyco type antifreeze). It should read −34° F. on a hydrometer.
6. Temperature gauge may be faulty and not reading correctly.

COOLING SYSTEM

RADIATOR HOSES

The lower radiator hose **MUST** be tied to engine mounting bracket to protect hose from fan and road damage.

The hoses are removed using screwdriver, or hex wrench on hose clamp. A torque wrench **MUST** be used when tightening hose clamps.

CAUTION: To prevent hose or clamp damage, tighten to 35 in. lbs. using a torque wrench. Do not overtighten.

A hardened, cracked, swollen or restricted hose should be replaced. Do not damage radiator inlet and outlet when loosening hoses.

Radiator hoses should be routed without any kinks and indexed as original. The use of molded hoses is recommended.

RADIATOR

The radiator is crossflow type (horizontal tubes) with design features that provide greater strength as well as sufficient heat transfer capabilities to keep the engine satisfactorily cooled.

To determine whether coolant is flowing through the cooling system, use the following procedure:

1. If engine is cold, idle engine until normal operating temperature is reached. Then feel the upper radiator hose. If it is hot, coolant is circulating.
2. Drain a small quantity of coolant from the radiator to expose a few radiator tubes that can be seen by looking down through the radiator filler neck. With engine idling at normal operating temperature, if coolant is flowing out of the exposed tubes, coolant is circulating.

DRAINING SYSTEM

Drain cooling system. Move temperature selector for heater to "full on." Without removing pressure cap and with system not under pressure, open drain cock.

Removal of the valve switch from the top of the thermostat housing is required because the thermostat is equipped with a rubber seal and prevents air flow through it; this seal provides better heater performance.

REMOVAL—RADIATOR

Remove hose clamps and hoses from the radiator. Refer to power unit disassembly section 1-20 and section 1-21.

COOLING SYSTEM CLEANING, REVERSE FLUSHING AND REFILLING

CLEANING

Drain cooling system and refill with clean water. Run engine with radiator cap installed until upper radiator hose is hot. Stop engine and drain water from system. If water is dirty, fill, run and drain system again until water runs clear. After final draining, close drain cock tightly with fingers.

REVERSE FLUSHING

Reverse flushing of the cooling system is the forcing of water through the cooling system, using air pressure in a direction opposite to that of the normal flow of water.

REVERSE FLUSHING RADIATOR

Drain cooling system and remove radiator hoses from engine. Install suitable flushing gun in radiator lower hose. Fill radiator with clean water and turn on air in short blasts. **CAUTION: Internal radiator pressure must not exceed 20 psi as damage to radiator may result. Continue this procedure until water runs clear.**

REFILLING SYSTEM

For service, refill system with a minimum 50/50 solution of ethylene glyco type antifreeze formulated with Alugard or silicate inhibiter and water.

Open heater coolant control valve and with vacuum valve removed, add coolant to radiator filling system to vacuum vlve hole in water box; install and tighen vacuum valve to 15 ft. lbs. torque. Continue adding coolant to the radiator up to the pressure cap seat.

Install pressure cap. Start engine and run until the upper radiator hose feels hot. Stop engine and add more coolant, if necessary, to completely fill radiator.

CAUTION: ENGINE COOLING SYSTEM WITH HIGH WATER PUMP. If the required amount of antifreeze cannot be added, check the freeze point and drain required amount of coolant from radiator to permit additional anitfreeze. Install pressure cap and mix coolant by running engine. Repeat procedure as necessary to add desired quantity of antifreeze.

ENGINE REMOVAL
12 H.P.

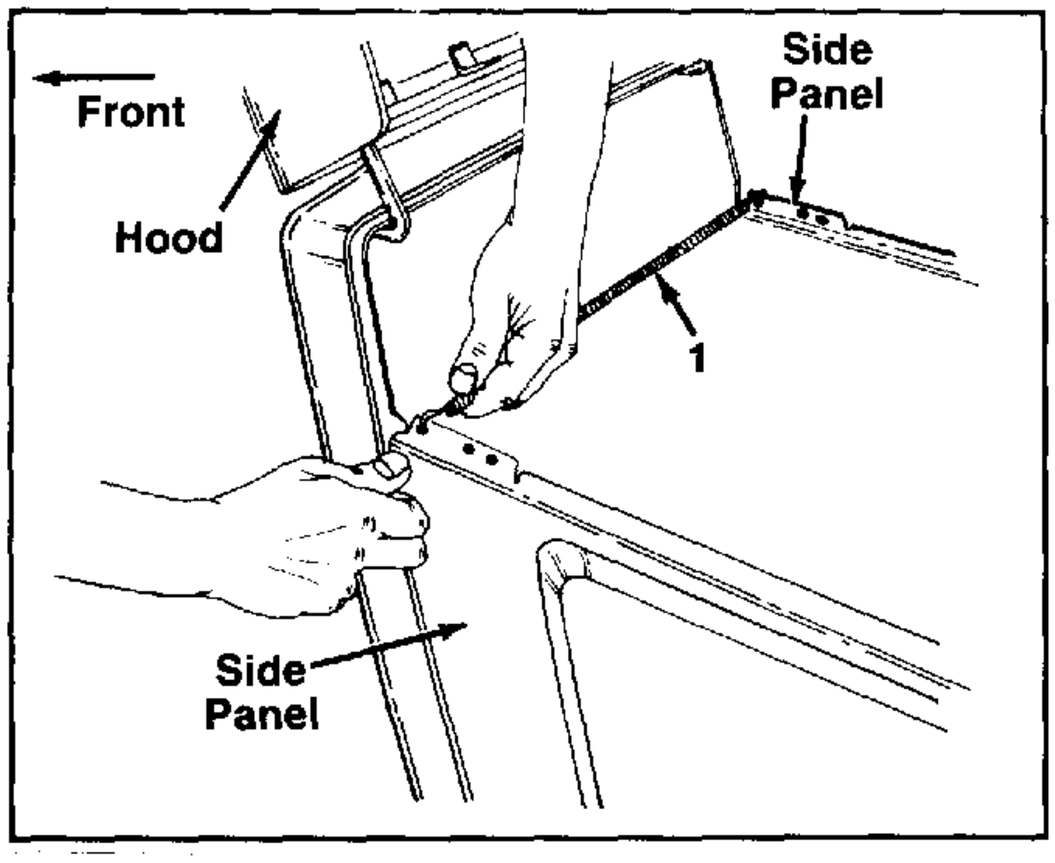

FIGURE 1.

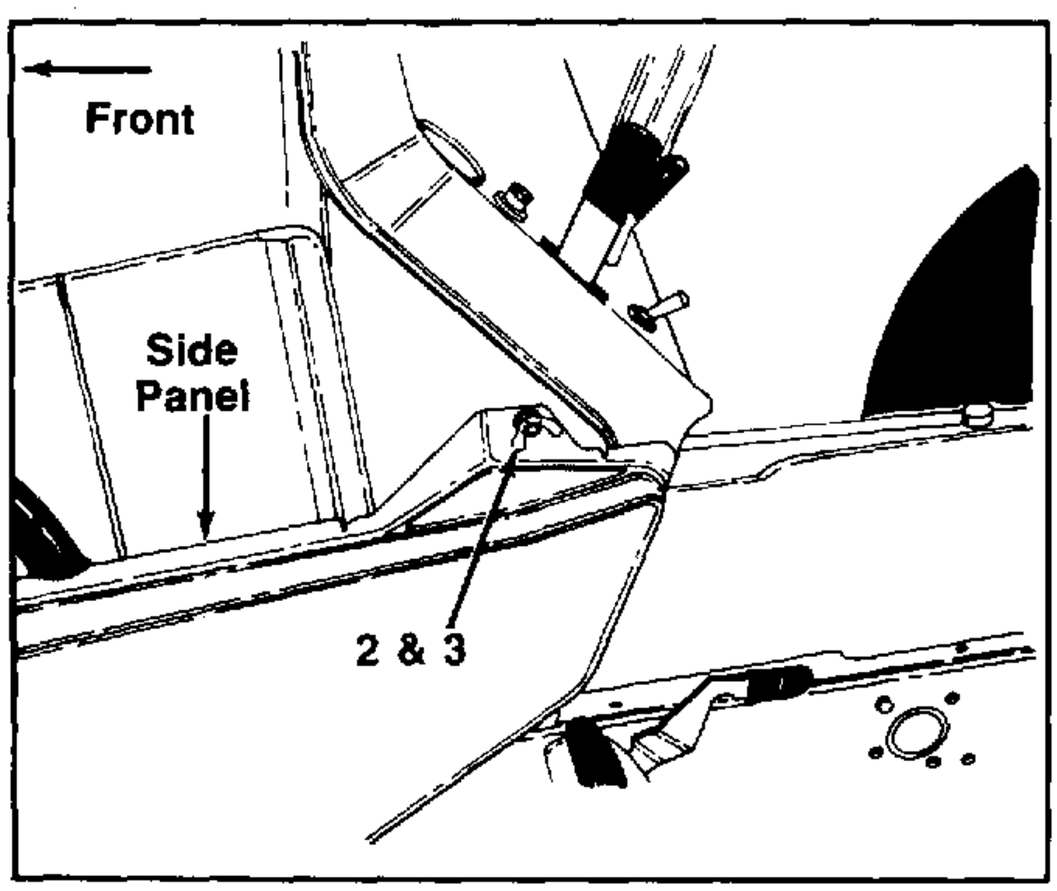

FIGURE 2.

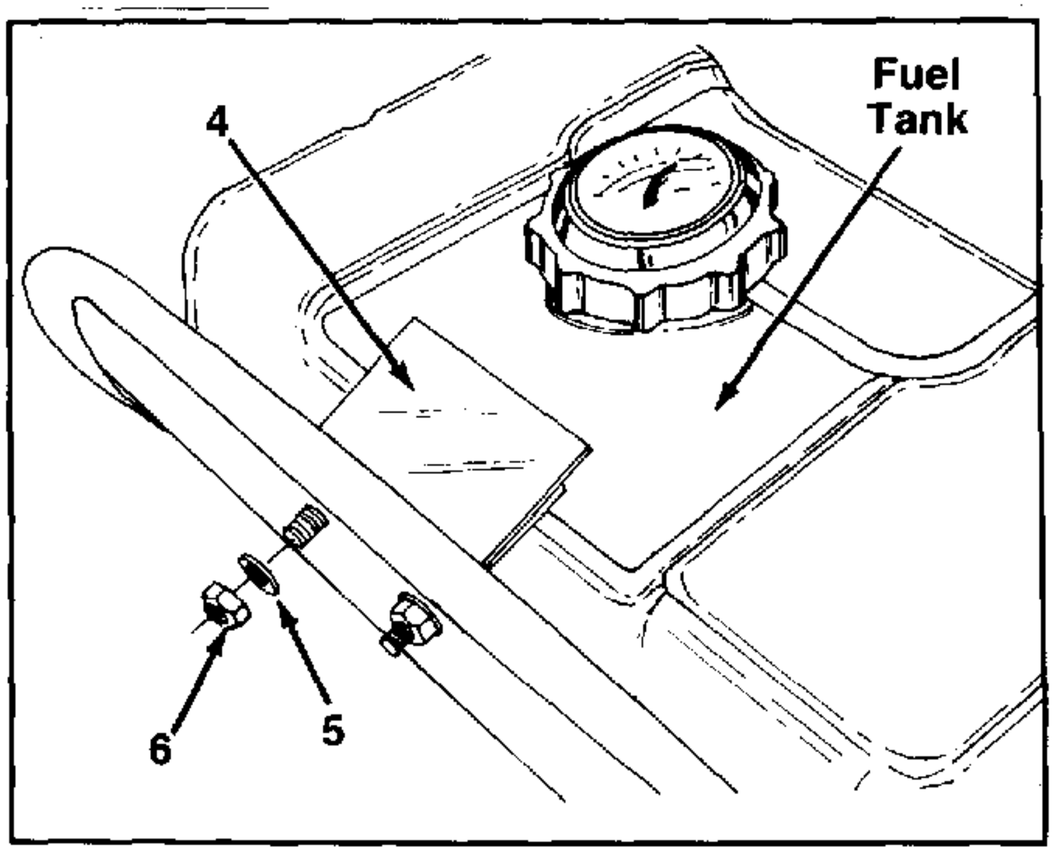

FIGURE 3.

REMOVAL

1. Remove the two side panels from tractor, by opening the hood and removing the extension spring, flat washer and wing nut on each side. See figures 1 and 2. Retain spring and hardware for reassembly.

2. Close the fuel line shut-off valve, (turn clockwise) located on the bottom left hand side of fuel tank.
3. Remove clamp and fuel line from bottom of fuel tank and be prepared to catch any fuel in a container.

4. Remove the fuel tank, by removing two hex nuts and flat washers from fuel tank clamp. See figure 3.

NOTE

Tank may be wedged into fuel tank support bracket; upward pressure on bottom of tank may be required to remove tank.

1. Extension Spring
2. Flat Washer
3. Wing Nut
4. Fuel Tank Clamp
5. Flat Washer
6. Hex Nut

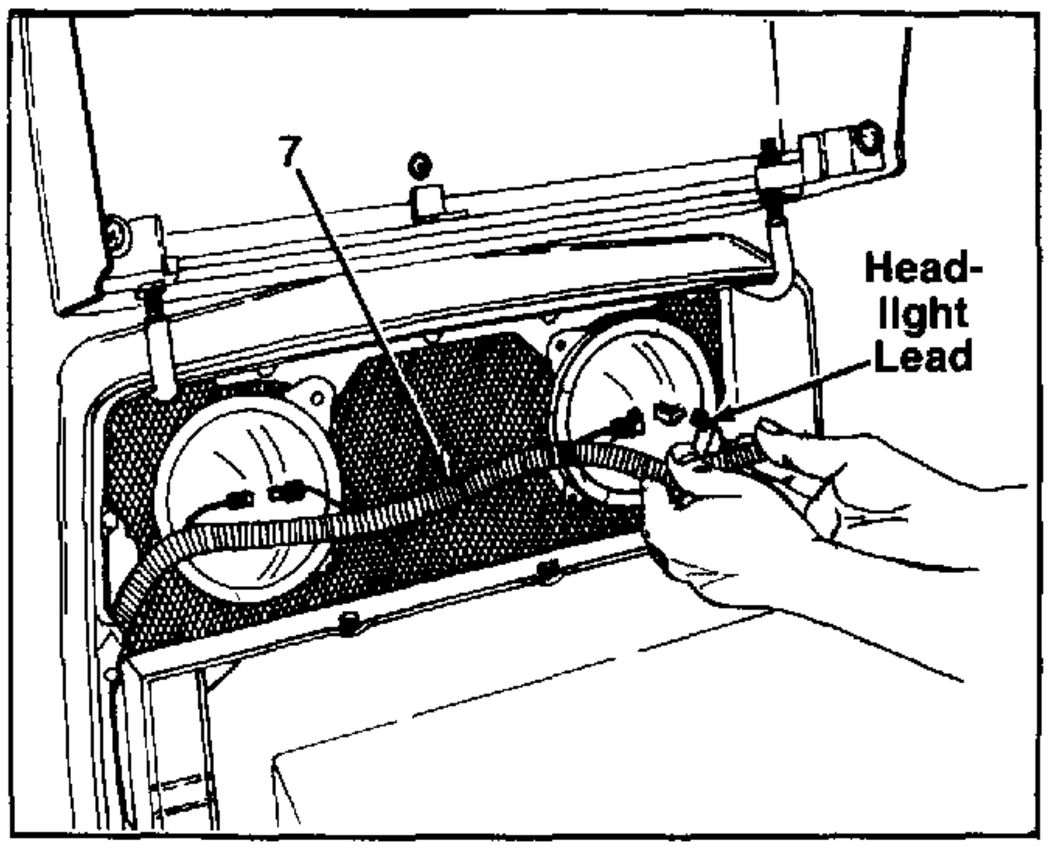

FIGURE 4.

5. Disconnect the four wire leads at headlights. See figure 4.

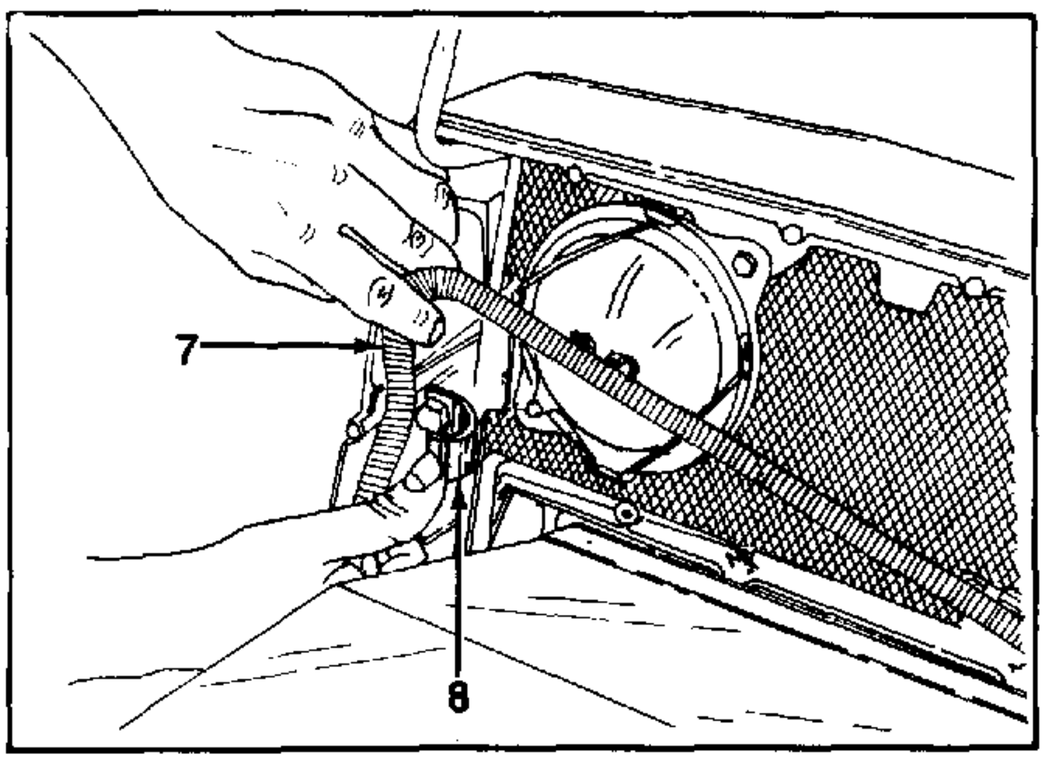

FIGURE 5.

6. Pull the cable clamp back enough to allow removal of headlight wire harness from grille. See figure 5.

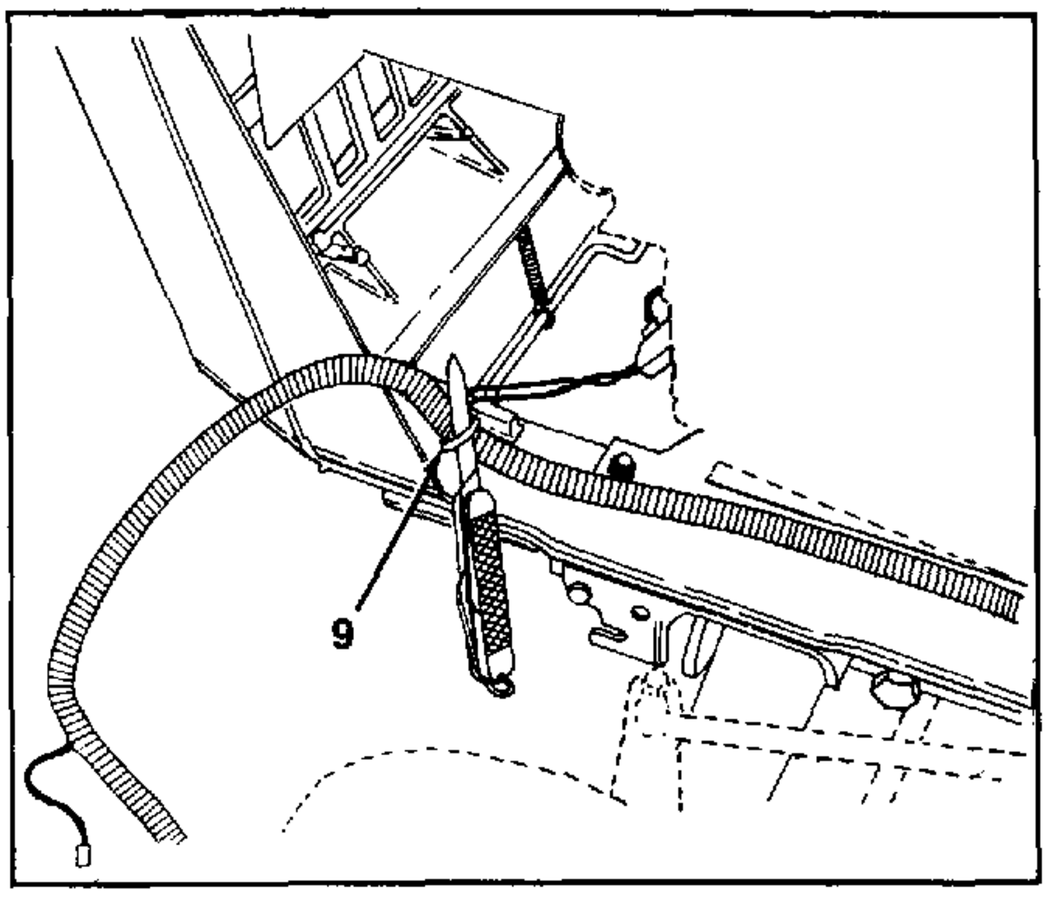

FIGURE 6.

7. Cut the cable tie located on bottom left hand side of grille. See figure 6. Discard cable tie.

7. Headlight Wire Harness
8. Cable Clamp
9. Cable Tie

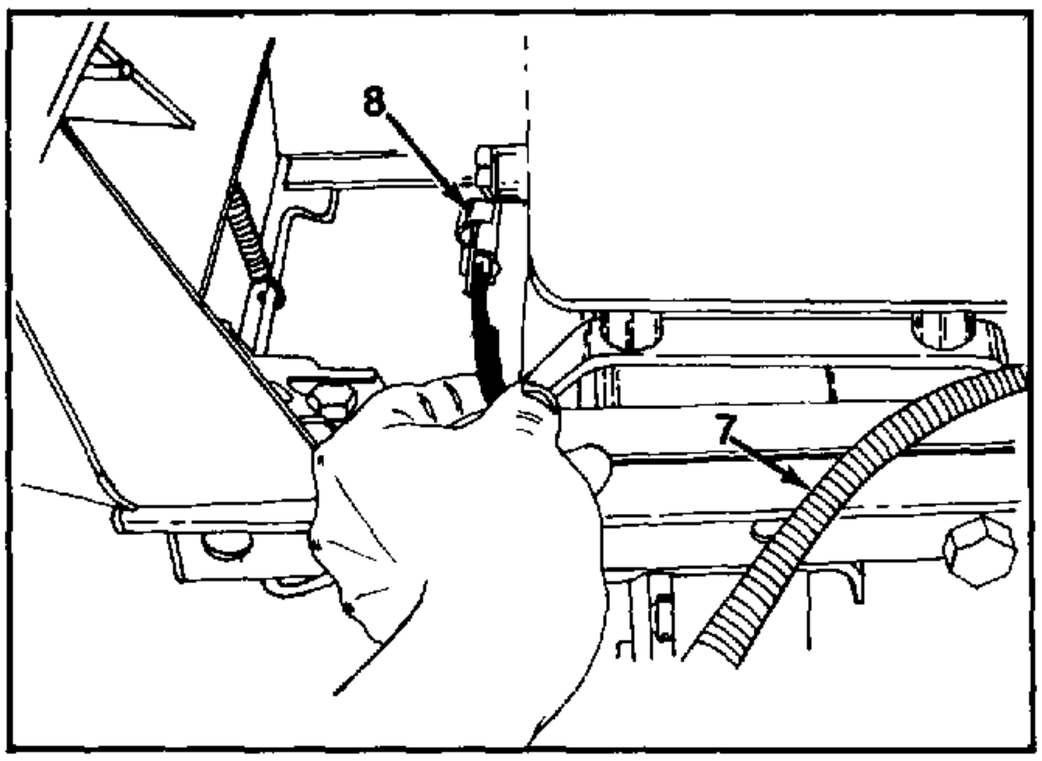

FIGURE 7.

8. Pull the cable clamp back enough to allow removal of wire harness connector located at front left hand side of engine. See figures 7 and 8.

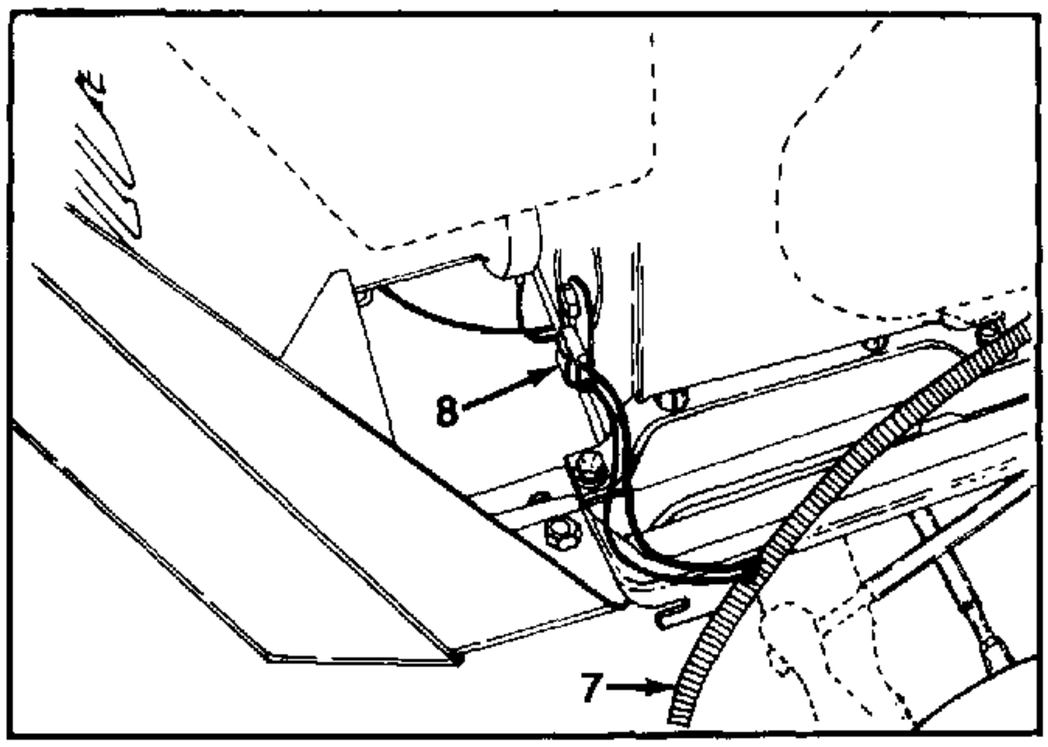

FIGURE 8.

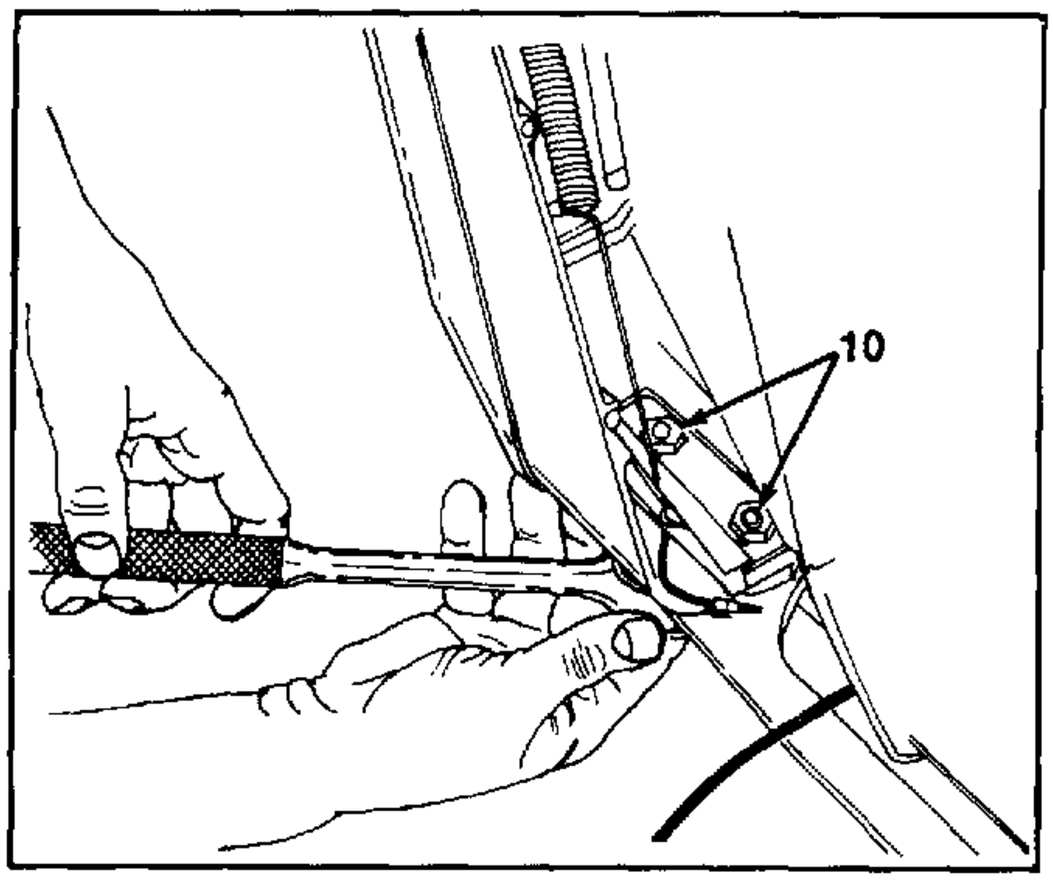

FIGURE 9.

9. Remove four hex bolts and lock washers securing the grille and hood to the front chassis. See figure 9. Use a ½" socket wrench, going up through the access holes in the chassis.

7. Headlight Wire Harness
8. Cable Clamp
10. Hex Bolts

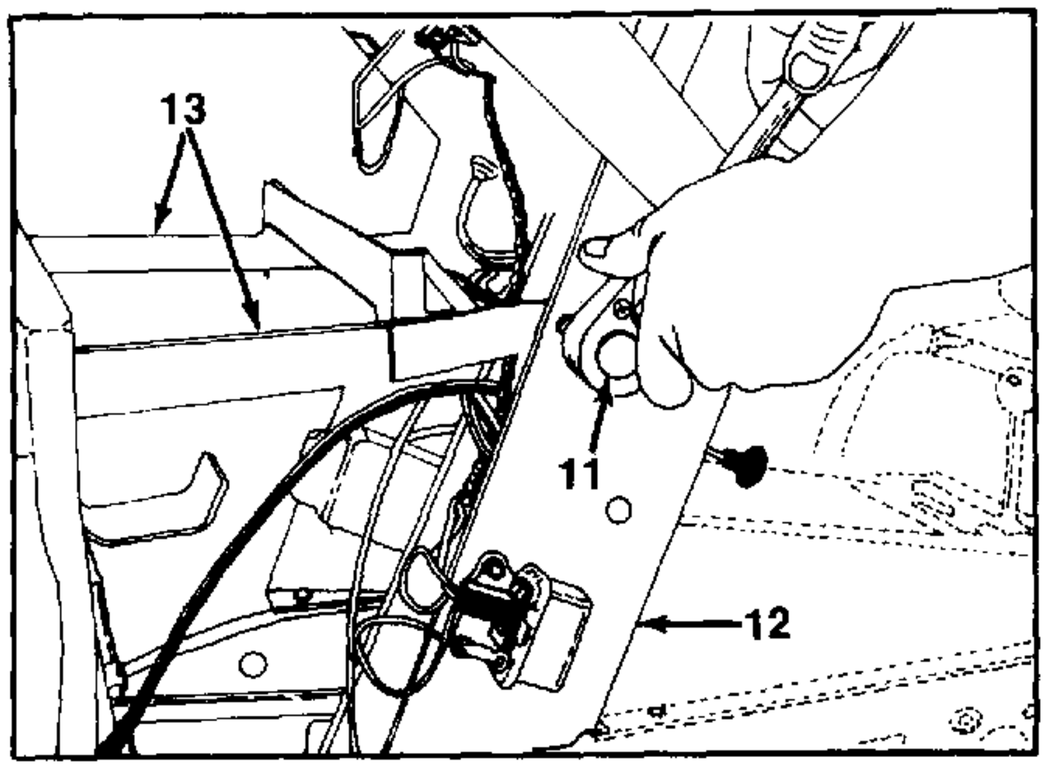

FIGURE 10.

10. Remove the hex bolts on each side of pedistal and gas tank straps. See figure 10.

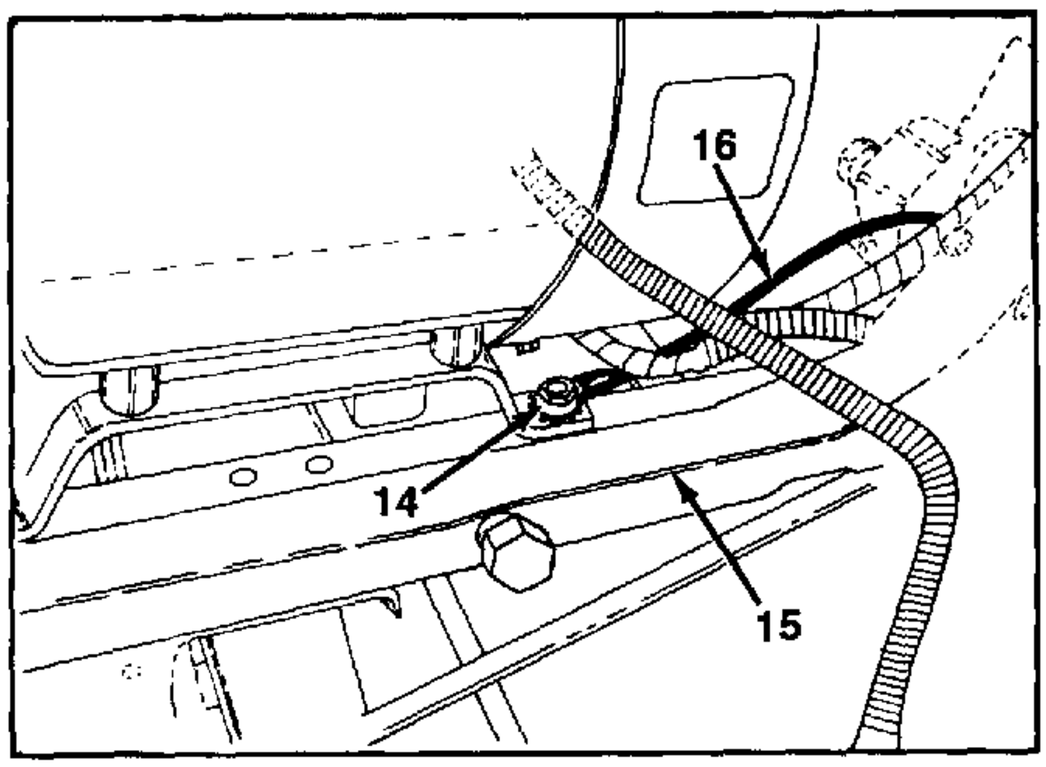

FIGURE 11.

11. Remove the hex nut and star washer located on the left hand side of chassis, holding ground wire. See figure 11.

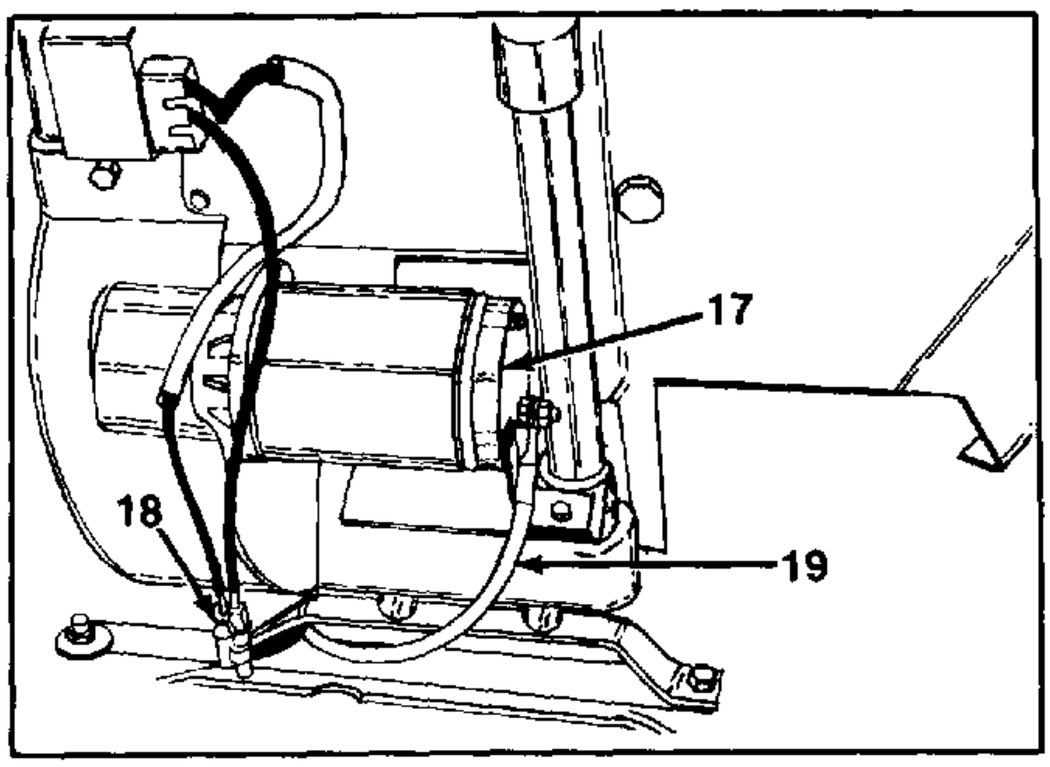

FIGURE 12.

12. Disconnect the wire harness connector located at the right hand side of engine. See figure 12.
13. Remove hex nut, holding electrical wire at starter, located at right hand side of engine. See figure 12.

11. Hex Bolts
12. Pedistal
13. Gas Tank Straps
14. Hex Nut and Star Washer
15. Chassis
16. Ground Wire
17. Starter
18. Wire Harness Connector
19. Electric Wire

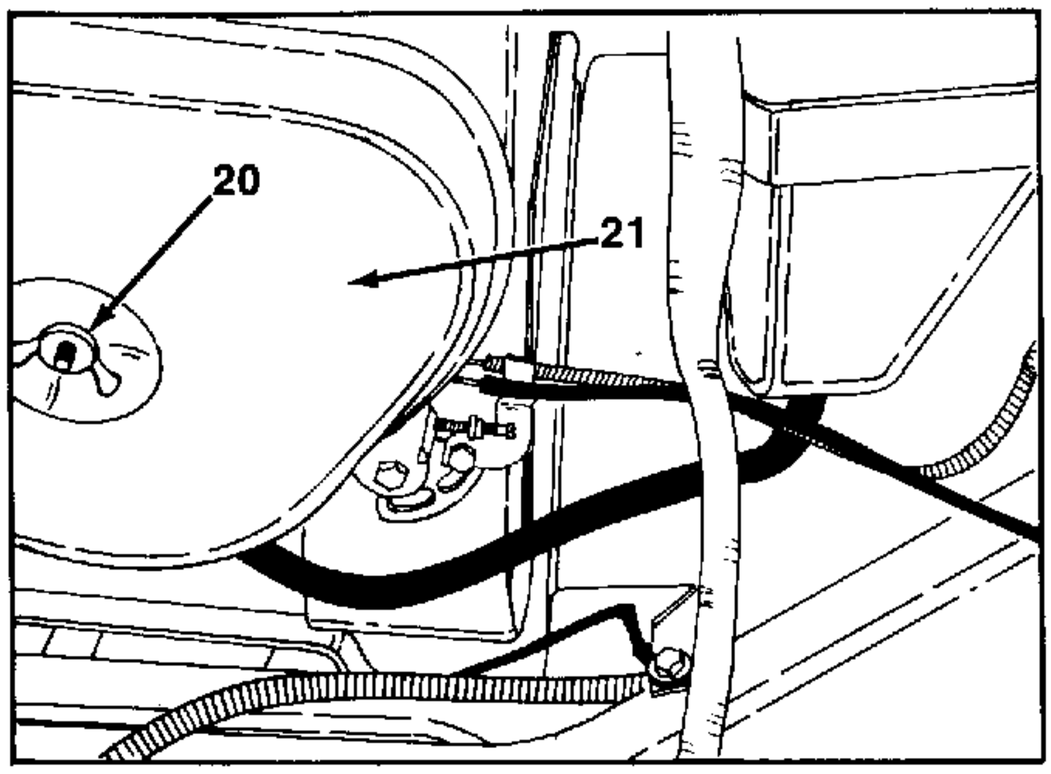

FIGURE 13.

14. Remove the wing nut holding the air cleaner cover. See figure 13.

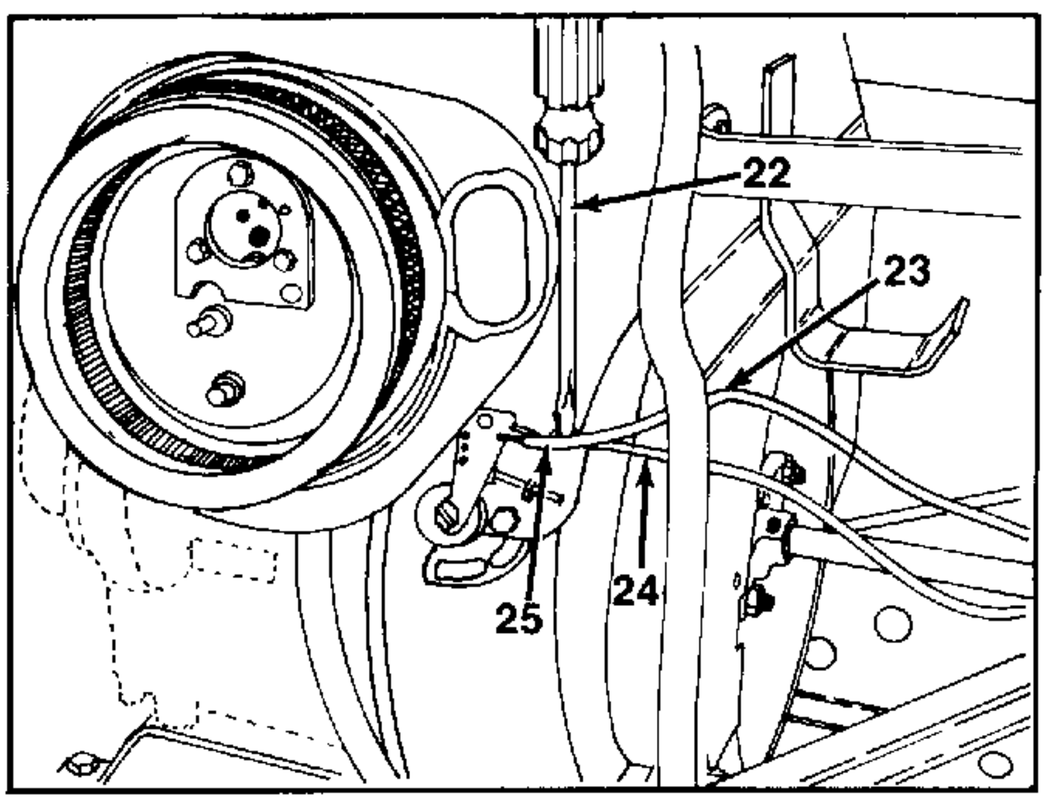

FIGURE 14.

15. With the air cleaner removed, access to the casing clamp, holding the throttle and choke control cables; can now be removed. Using a screwdriver, disconnect the throttle and choke control cables. See figure 14.

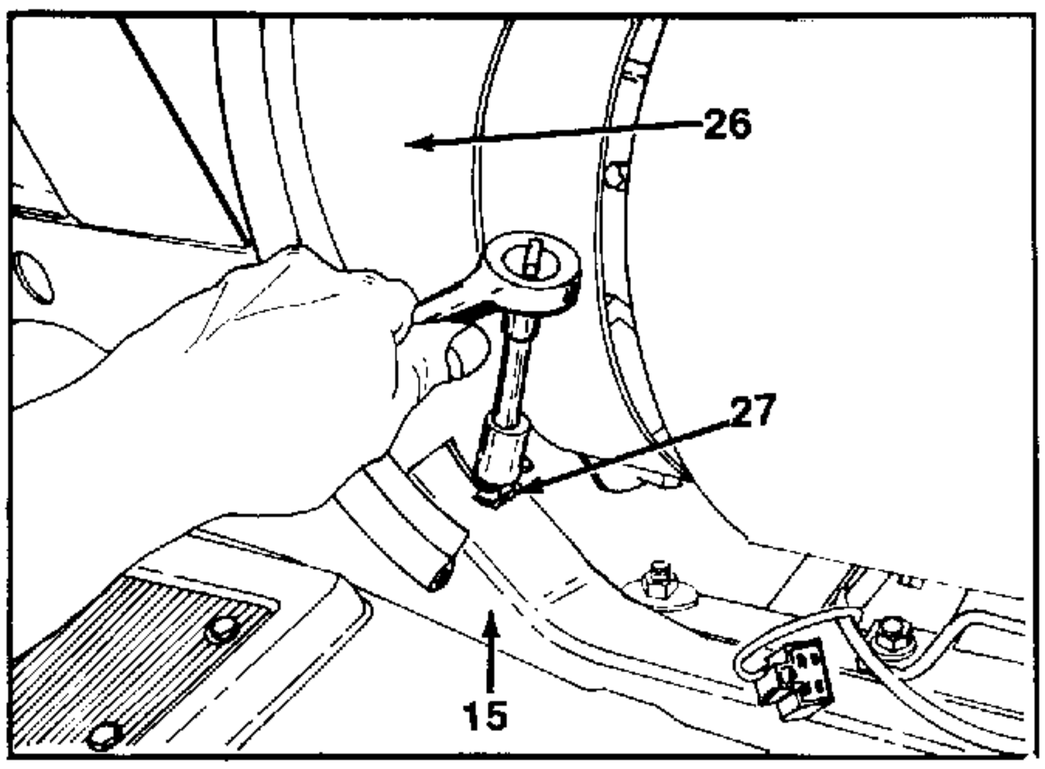

FIGURE 15.

16. Remove the heat shield from the chassis, by removing hex bolt and washer on right hand side. See figure 15.

15. Chassis
20. Wing Nut
21. Air Cleaner Cover
22. Screwdriver
23. Throttle Cable
24. Choke Cable
25. Casing Clamp
26. Heat Shield
27. Hex Bolt and Washer

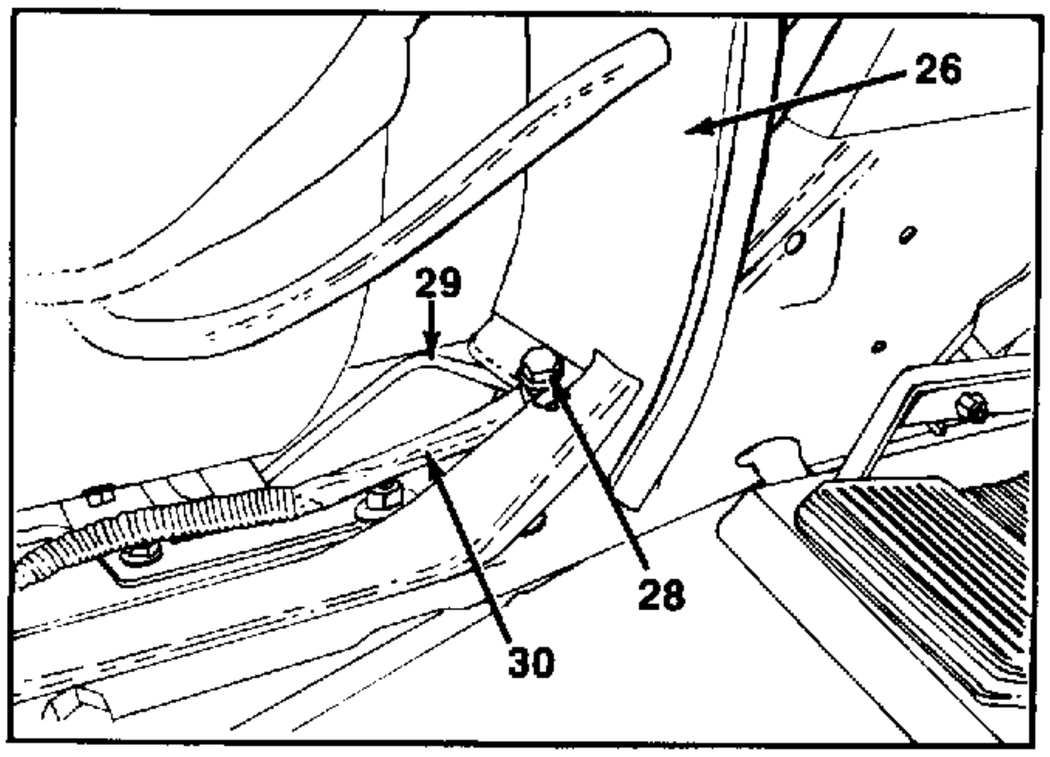

FIGURE 16.

17. Remove hex bolt, flat washer, star washer, ground wire and wire harness from heat shield located on the left hand side of chassis. See figure 16.

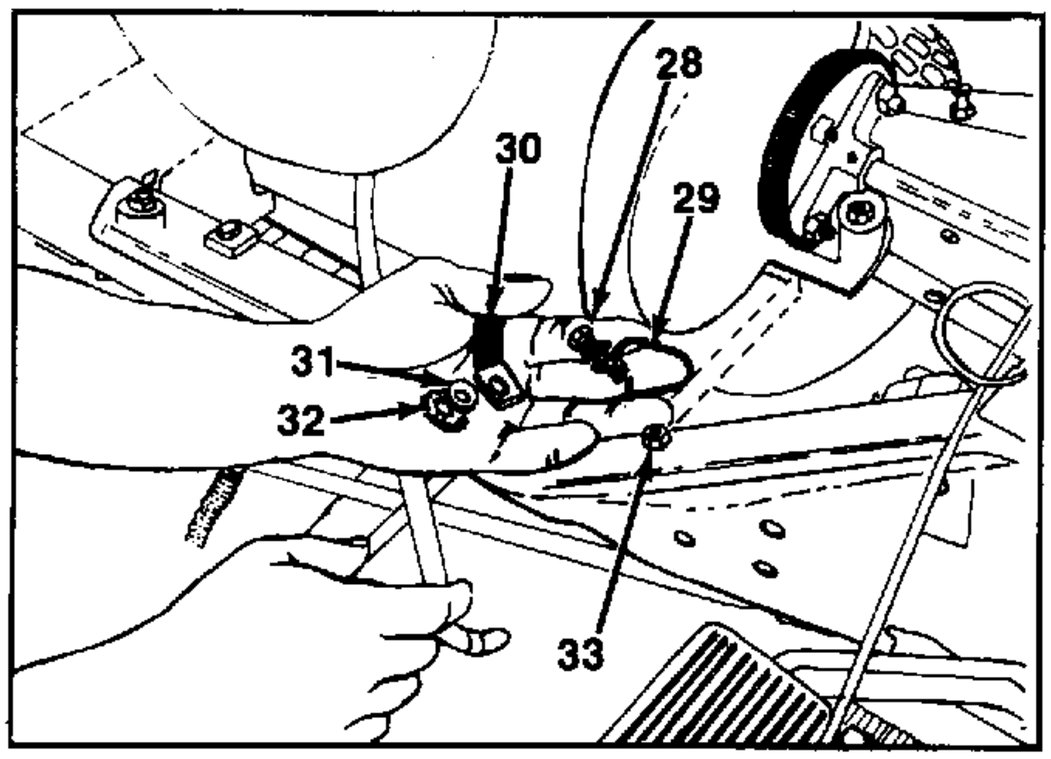

FIGURE 17.

18. Upon reassembly of heat shield to chassis, be sure wire on left hand side of chassis are properly grounded at weld nut. See figure 17.

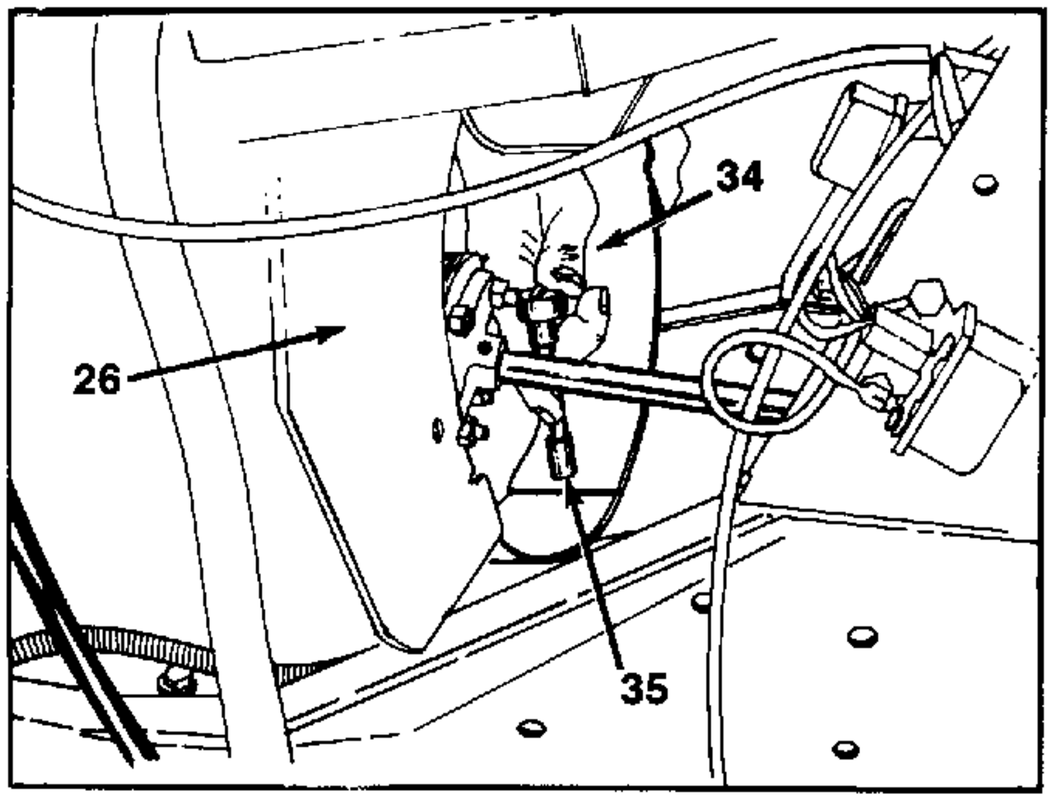

FIGURE 18.

19. Remove one self-tapping screw at bottom of coupling guard (attached to heat shield). See figure 18.

26. Heat Shield
28. Hex Bolt
29. Ground Wire
30. Wire Harness
31. Flat Washer
32. Star Washer
33. Weld Nut on Chassis
34. Coupling Guard
35. Self-Tapping Screw

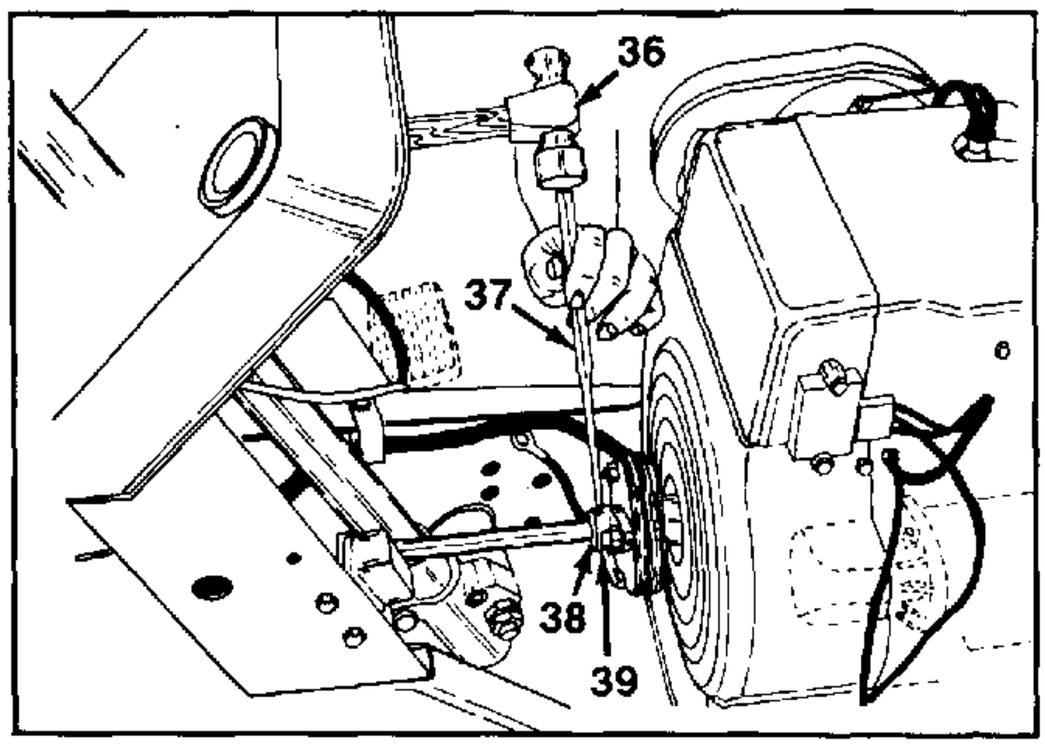

FIGURE 19.

20. Now lift the heat shield and coupling guard out of tractor.
21. With a drift pin and hammer, remove the roll pin located at the coupling of drive shaft and rear of engine. See figure 19.

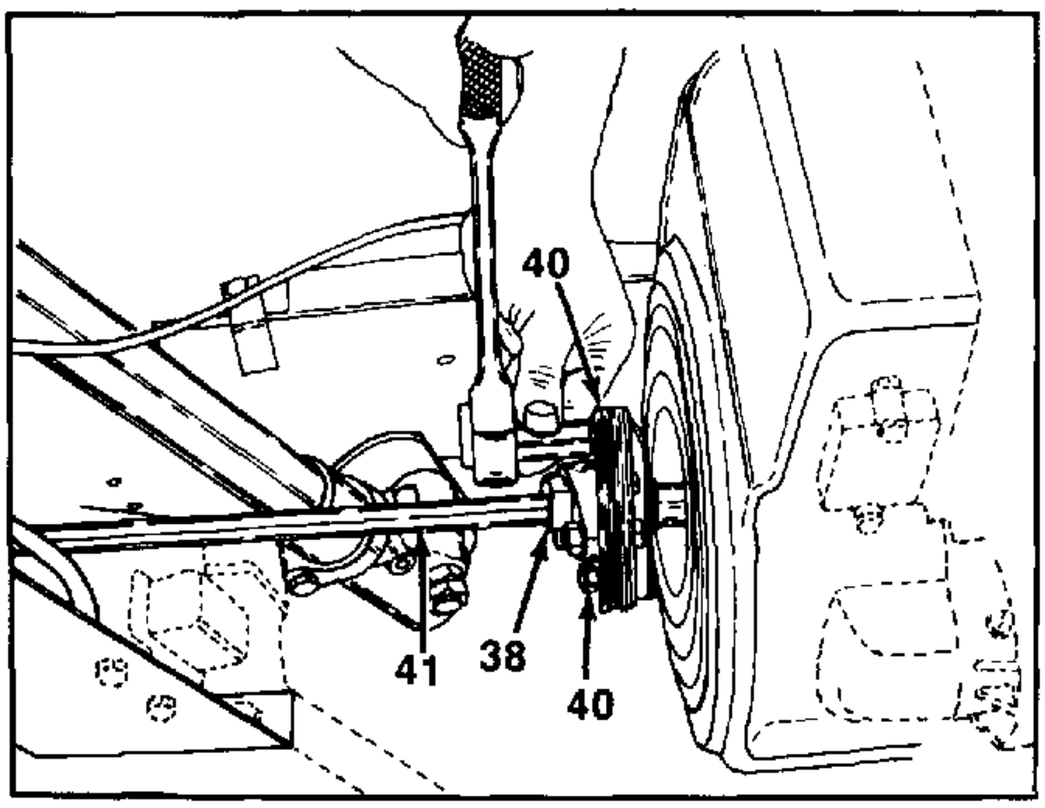

FIGURE 20.

22. Remove two hex nuts at coupling and flexible disc. See figure 20.

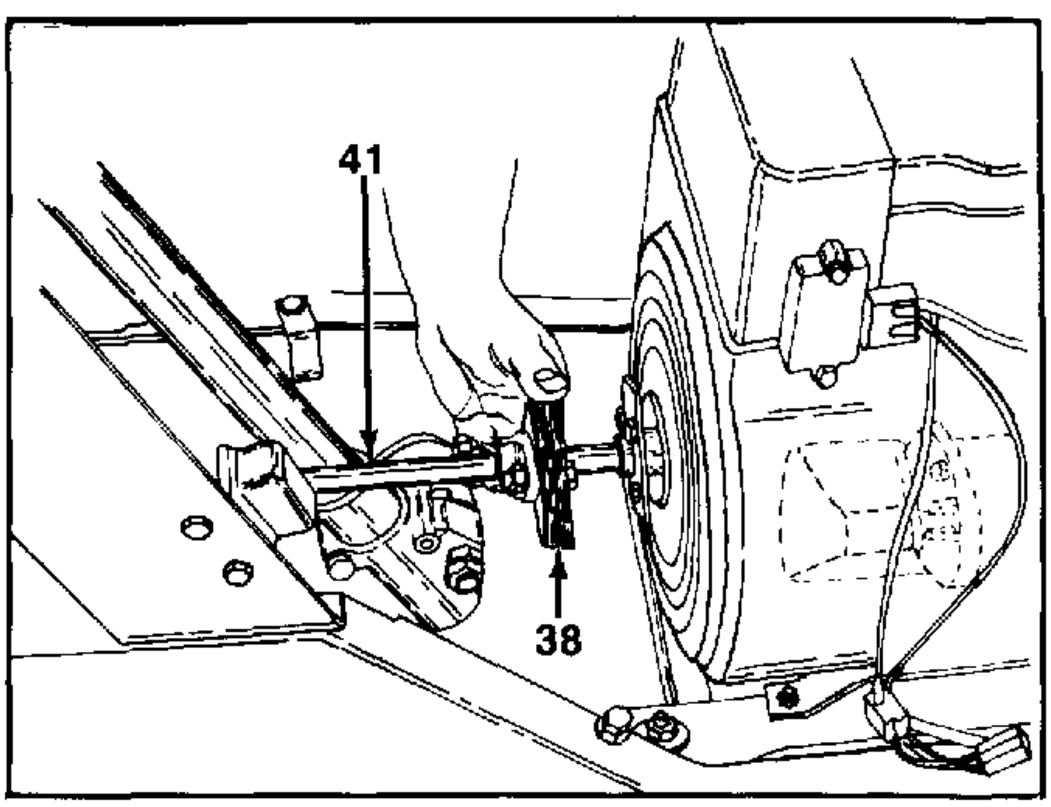

FIGURE 21.

23. Slide coupling and flexible disc back on drive shaft. See figure 21.

36. Hammer
37. Drift Pin
38. Coupling and Flexible Disc
39. Roll Pin
40. Hex Nuts
41. Drive Shaft

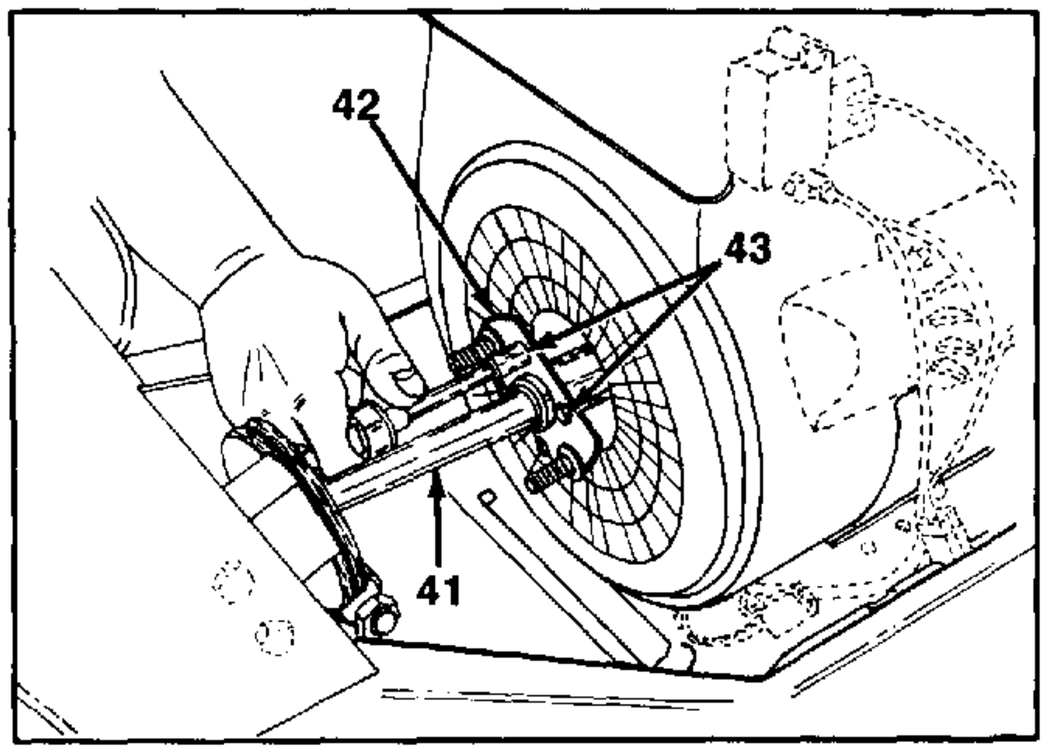

FIGURE 22.

24. Remove the two bolts at alignable bearing on engine at drive shaft. See figure 22.

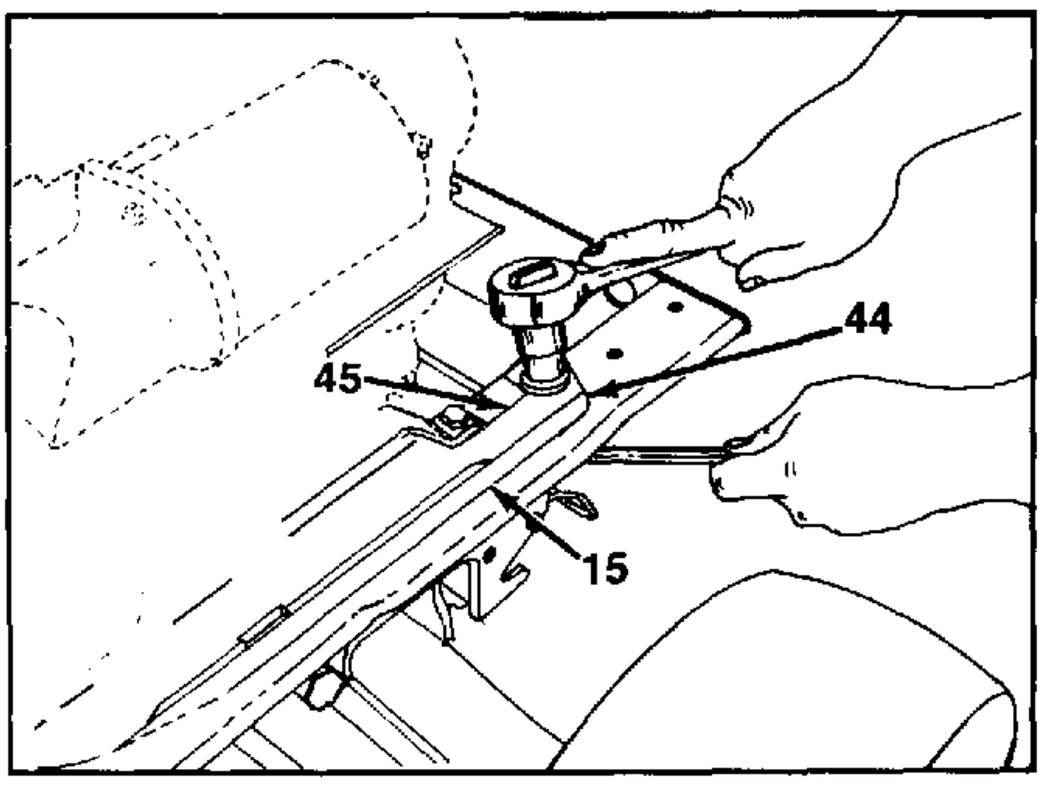

FIGURE 23.

25. Remove the four iso/mounts at chassis and engine craddle. See figure 23.

26. Now the engine may be removed from the tractor.
27. Upon reassembly of iso/mounts, they must be installed as shown in figure 24.

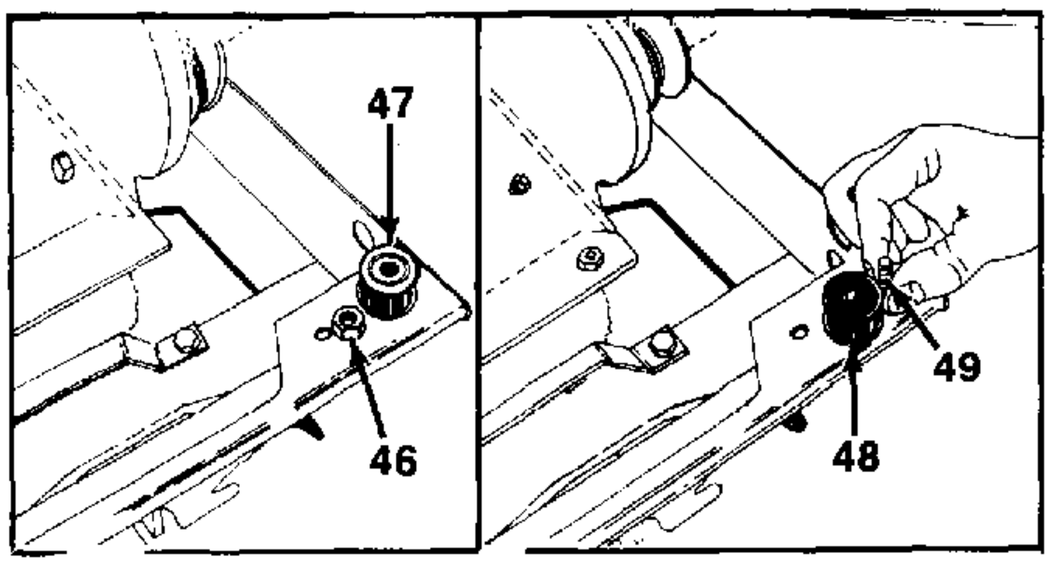

FIGURE 24.

15. Chassis
41. Drive Shaft
42. Alignable Bearing
43. Bolts
44. iso/mounts
45. Engine Craddle
46. Hex Nut
47. iso/mounts—Bottom Half
48. iso/mounts—Top Half
49. Hex Bolt

ENGINE REMOVAL
18 & 20 H.P. KOHLER

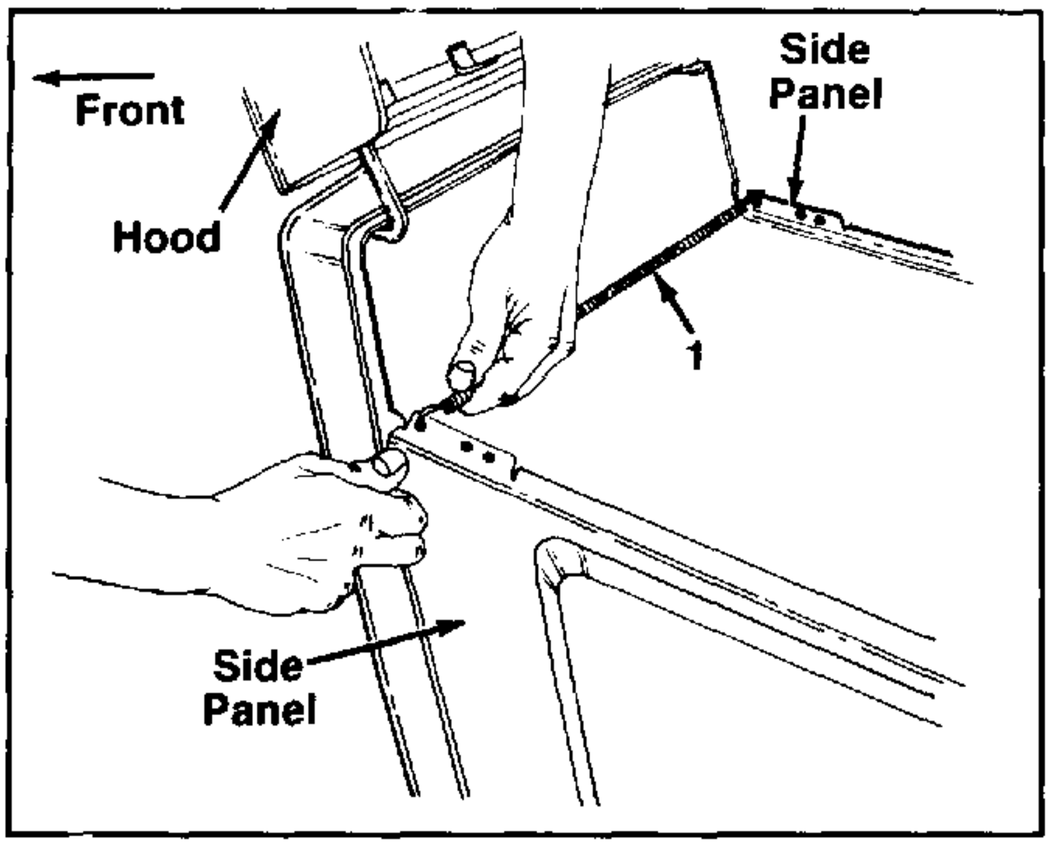

FIGURE 1.

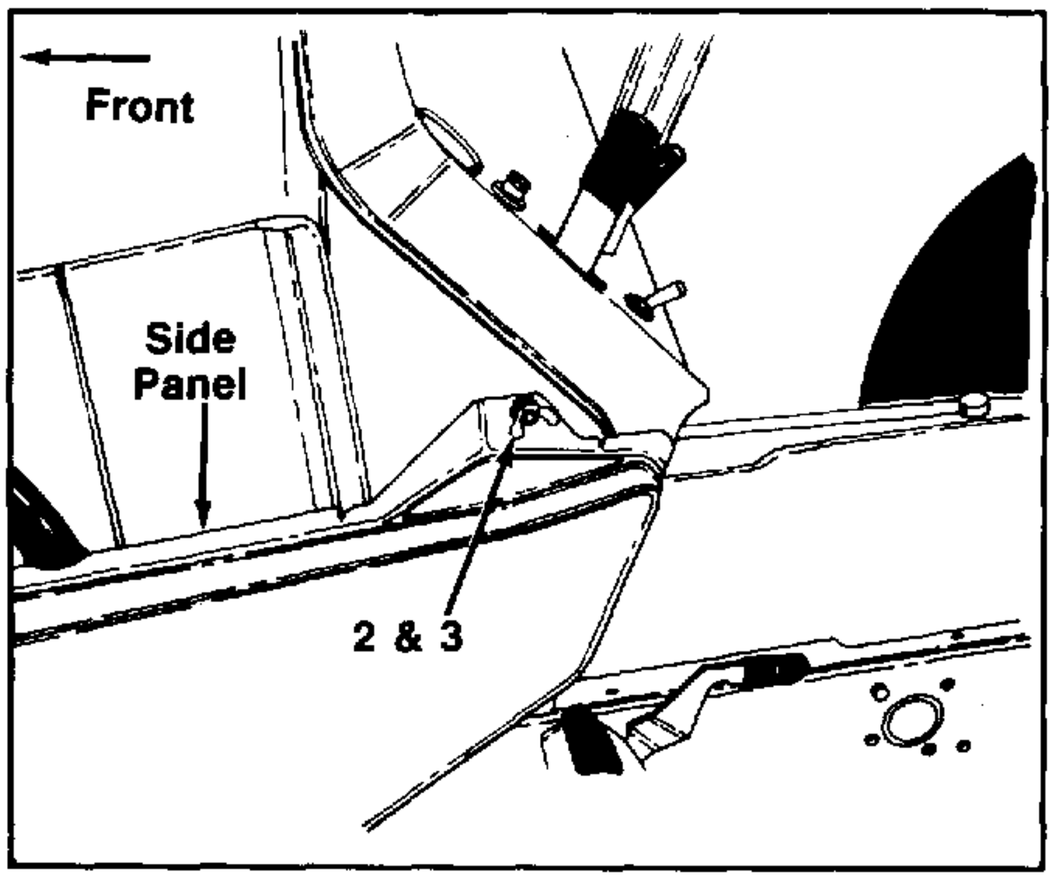

FIGURE 2.

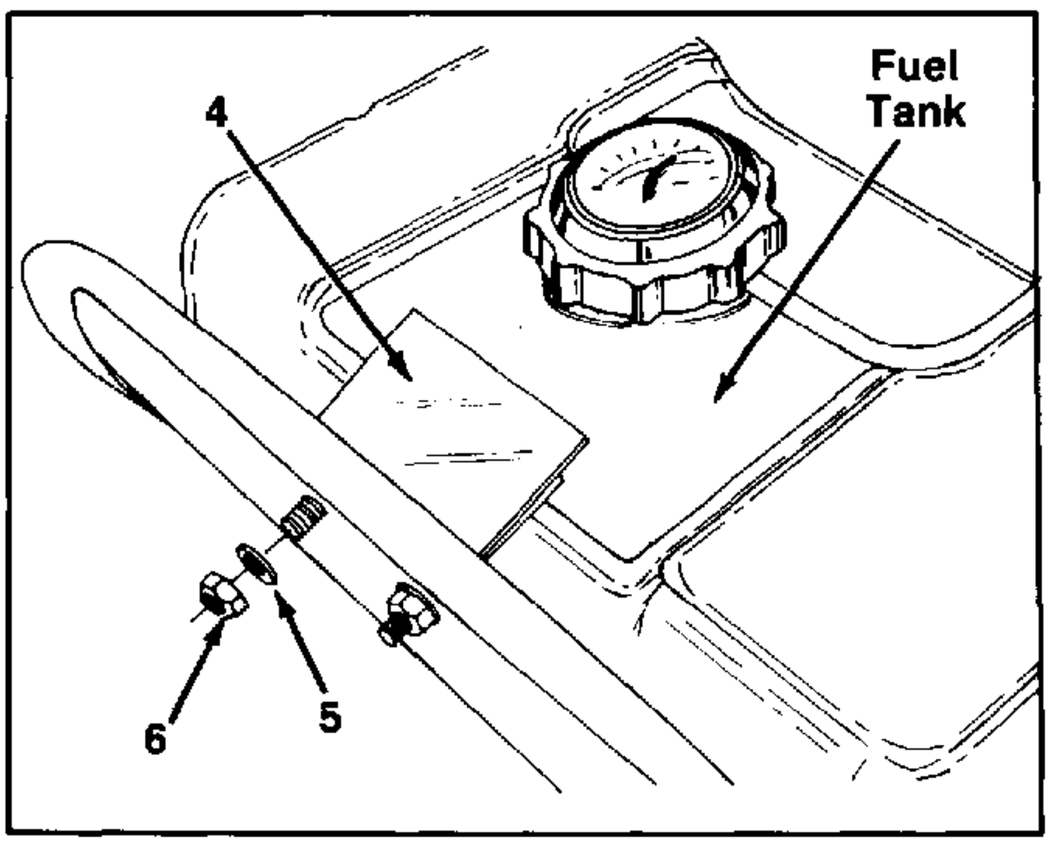

FIGURE 3.

REMOVAL

1. Remove the two side panels from tractor, by opening the hood and removing the extension spring, flat washer and wing nut on each side. See figures 1 and 2. Retain spring and hardware for reassembly.

2. Close the fuel line shut-off valve, (turn clockwise) located on the bottom left hand side of fuel tank.
3. Remove clamp and fuel line from bottom of fuel tank and be prepared to catch any fuel in a container.

4. Remove the fuel tank, by removing two hex nuts and flat washers from fuel tank clamp. See figure 3.

NOTE

Tank may be wedged into fuel tank support bracket; upward pressure on bottom of tank may be required to remove tank.

1. Extension Spring
2. Flat Washer
3. Wing Nut
4. Fuel Tank Clamp
5. Flat Washer
6. Hex Nut

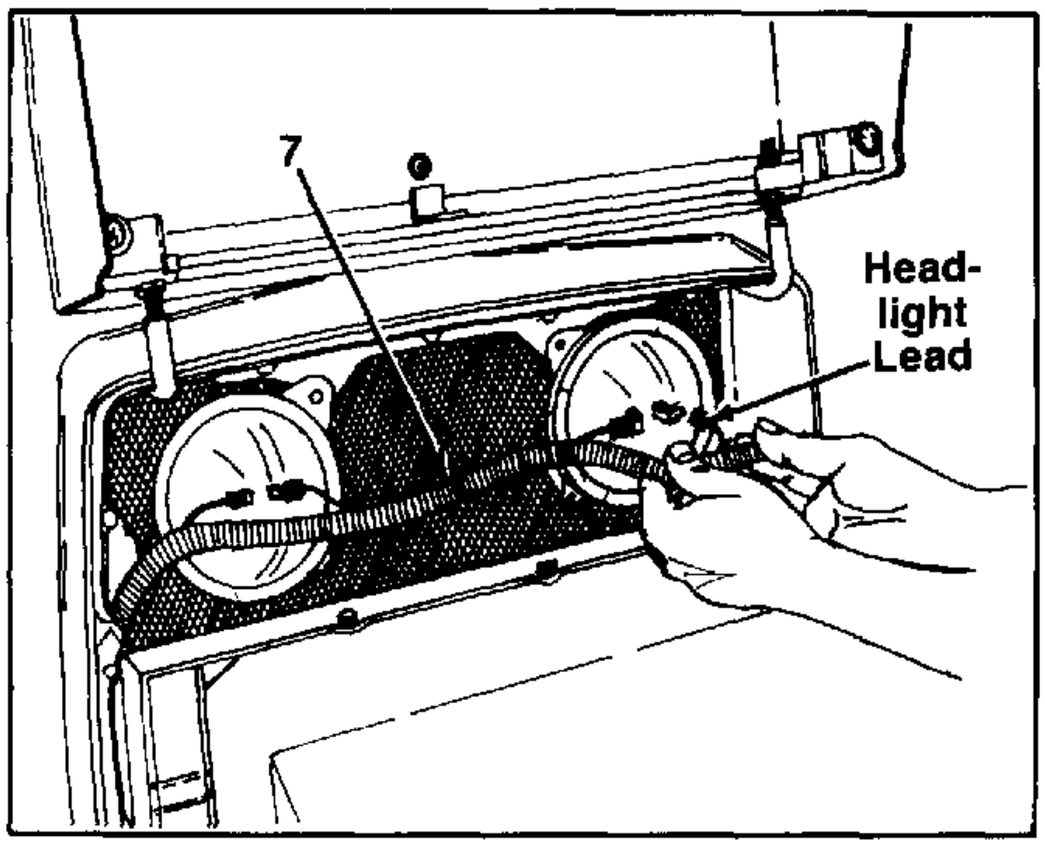

FIGURE 4.

5. Disconnect the four wire leads at headlights. See figure 4.

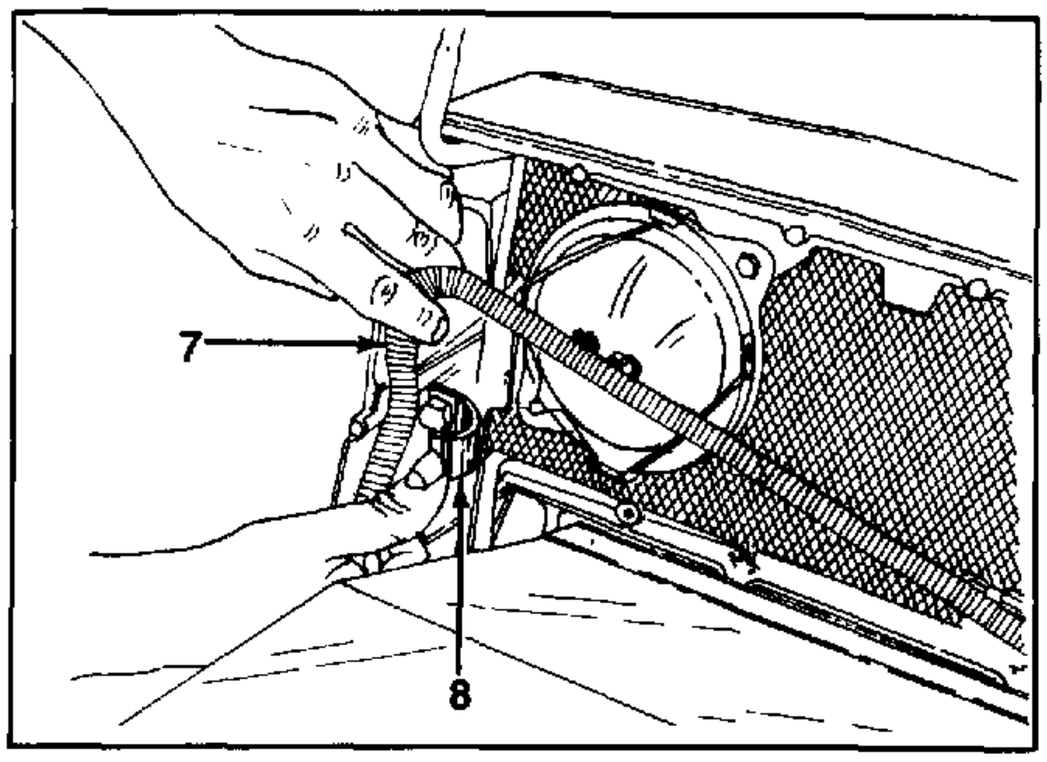

FIGURE 5.

6. Pull the cable clamp back enough to allow removal of headlight wire harness from grille. See figure 5.

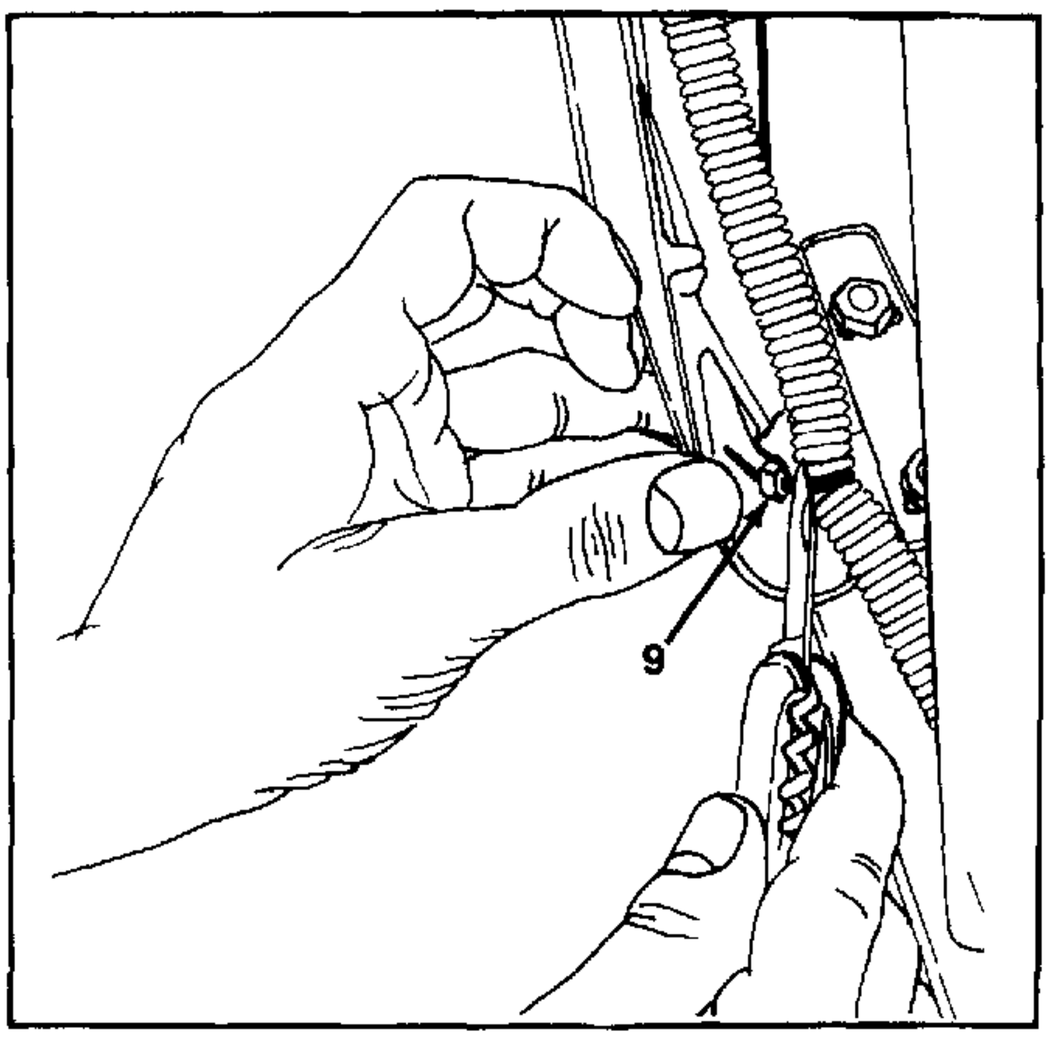

FIGURE 6.

7. Cut the cable tie located on bottom left hand side of grille. See figure 6. Discard cable tie.

7. Headlight Wire Harness
8. Cable Clamp
9. Cable Tie

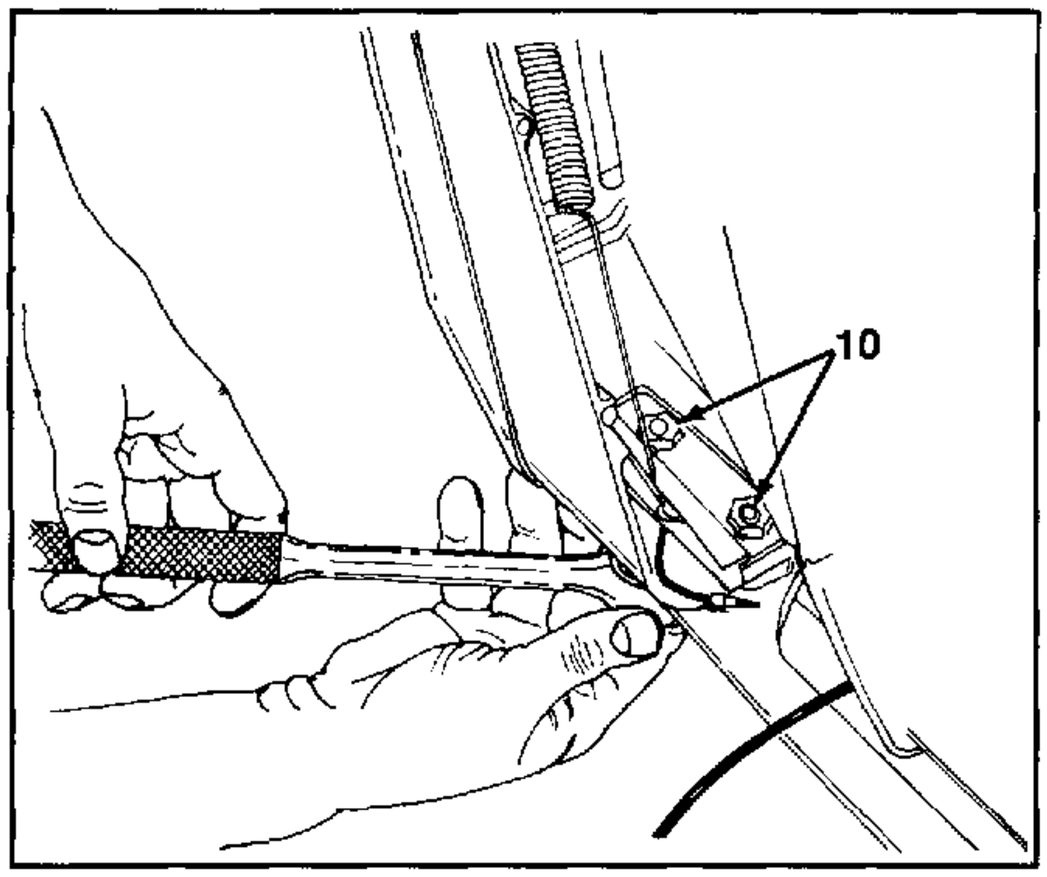

FIGURE 7.

9. Remove four hex bolts and lock washers securing the grille and hood to front chassis. See figure 7. Use a ½" socket wrench, going up through the access holes in the chassis.

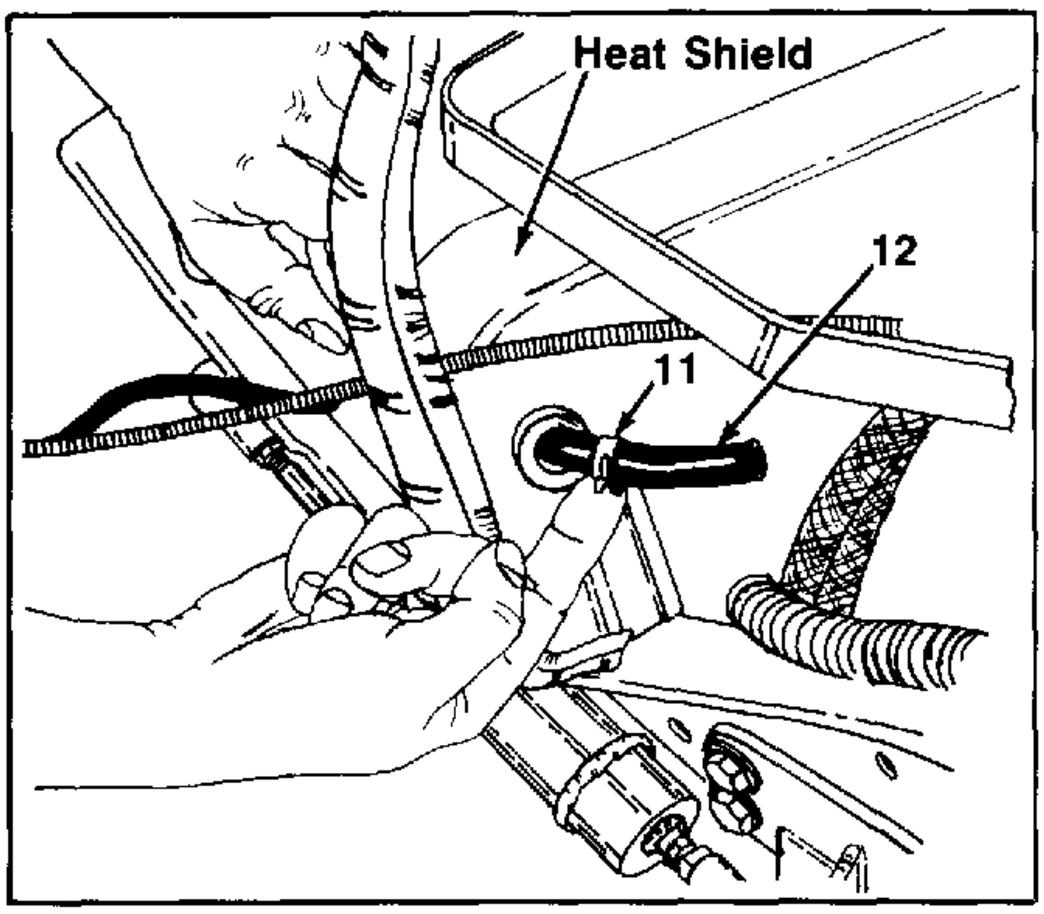

FIGURE 8.

10. Remove the fuel line clamp from fuel line, then pull the fuel line back through the heat shield. See figure 8.

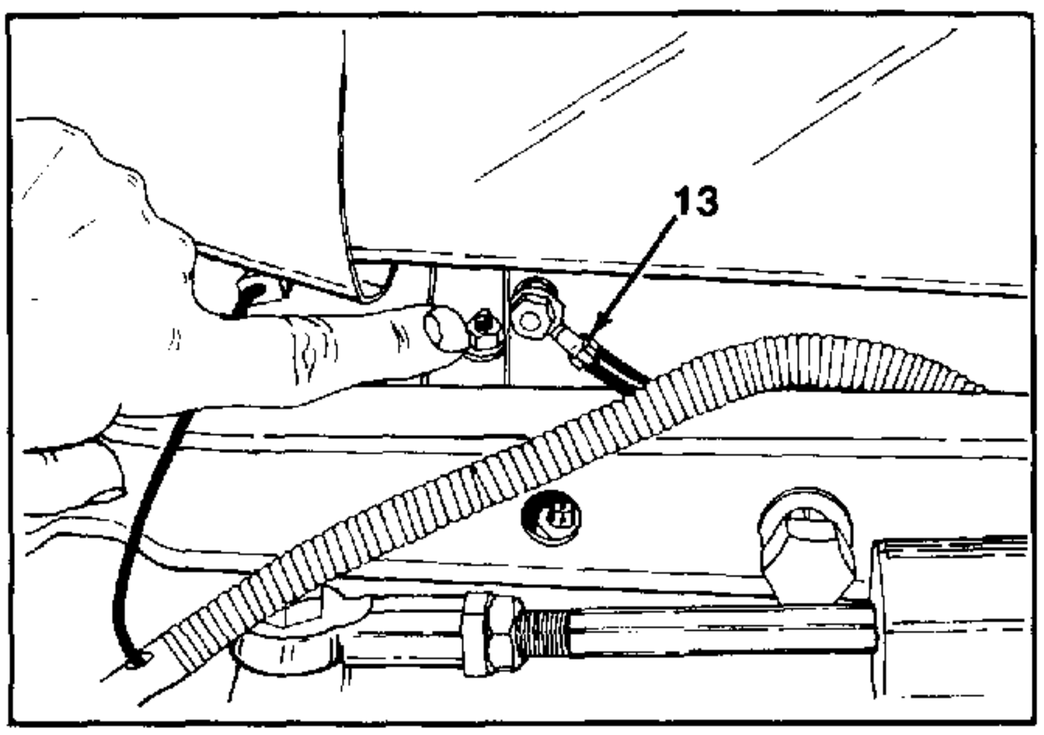

FIGURE 9.

11. Remove the engine ground cable, located on the lower left hand side of engine. See figure 9.

10. Hex Bolts
11. Fuel Line Clamp
12. Fuel Line
13. Engine Ground Cable

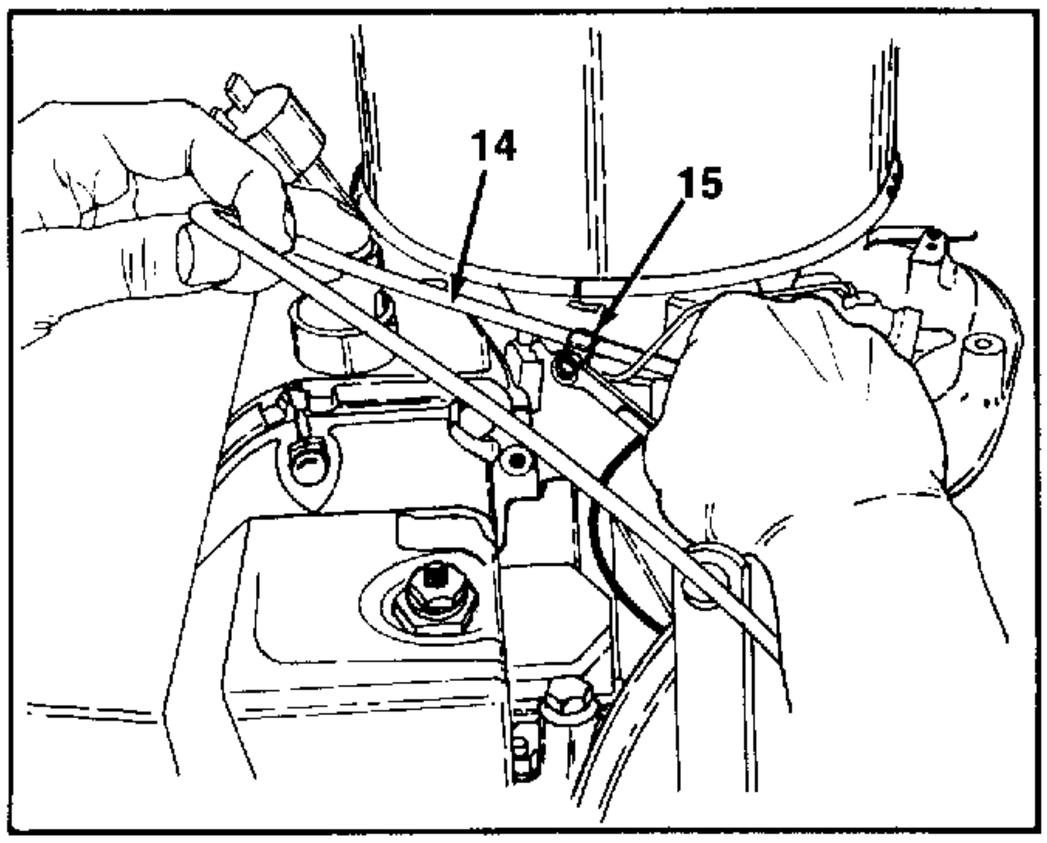

FIGURE 10.

12. Remove the choke cable, located on the left hand side of engine. See figure 10. Loosen the hex bolt and cable clamp.
13. Unhook end of choke cable.

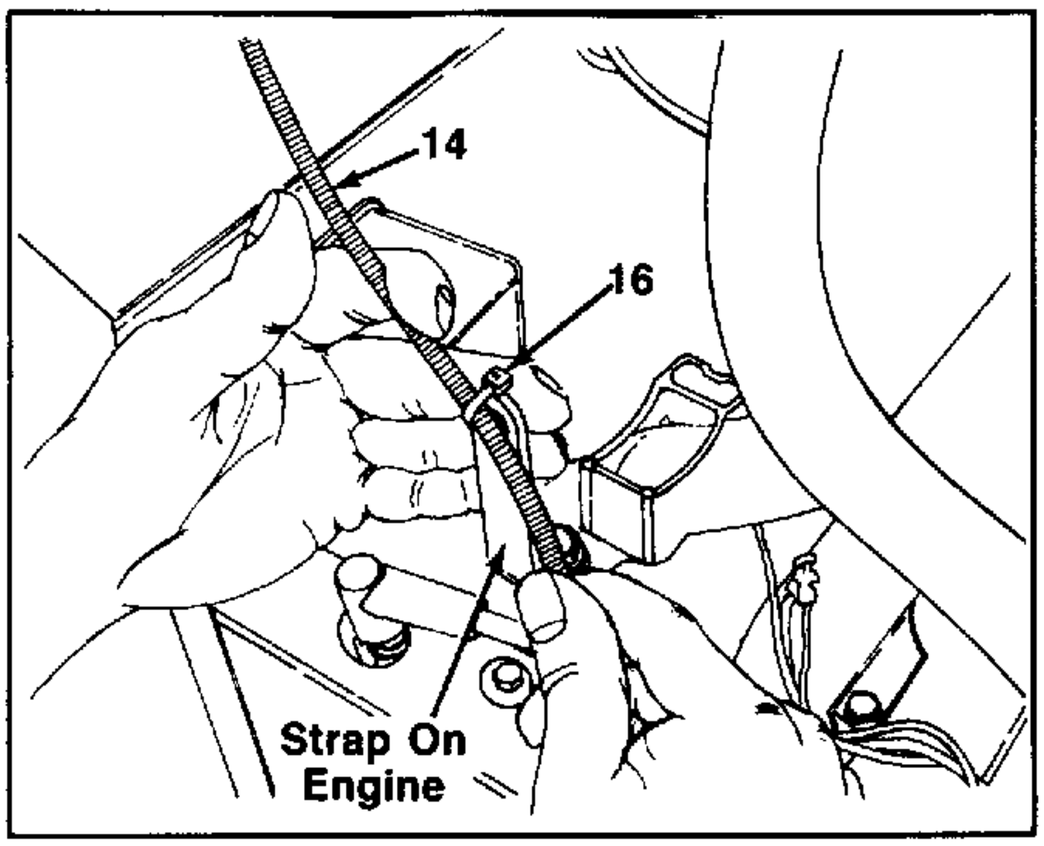

FIGURE 11.

14. Slide the choke cable out of cable tie located on top of engine strap. See figure 11. You may also cut the cable tie.

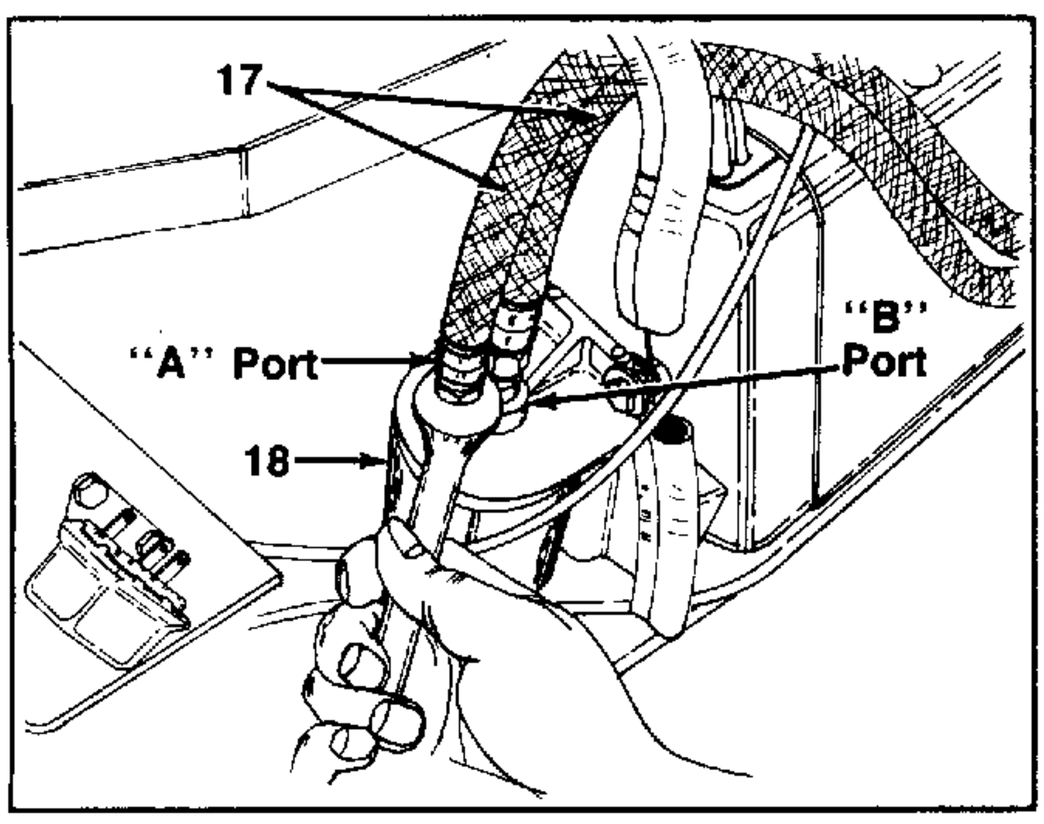

FIGURE 12.

15. Disconnect the two oil lines, located on the right hand side of engine, from the oil filter. See figure 12. A 5/8" wrench is required.

NOTE

Upon reassembly of oil lines to filter the top line on engine goes to port "A."

14. Choke Cable
15. Cable Clamp
16. Cable Tie
17. Oil Lines
18. Oil Filter

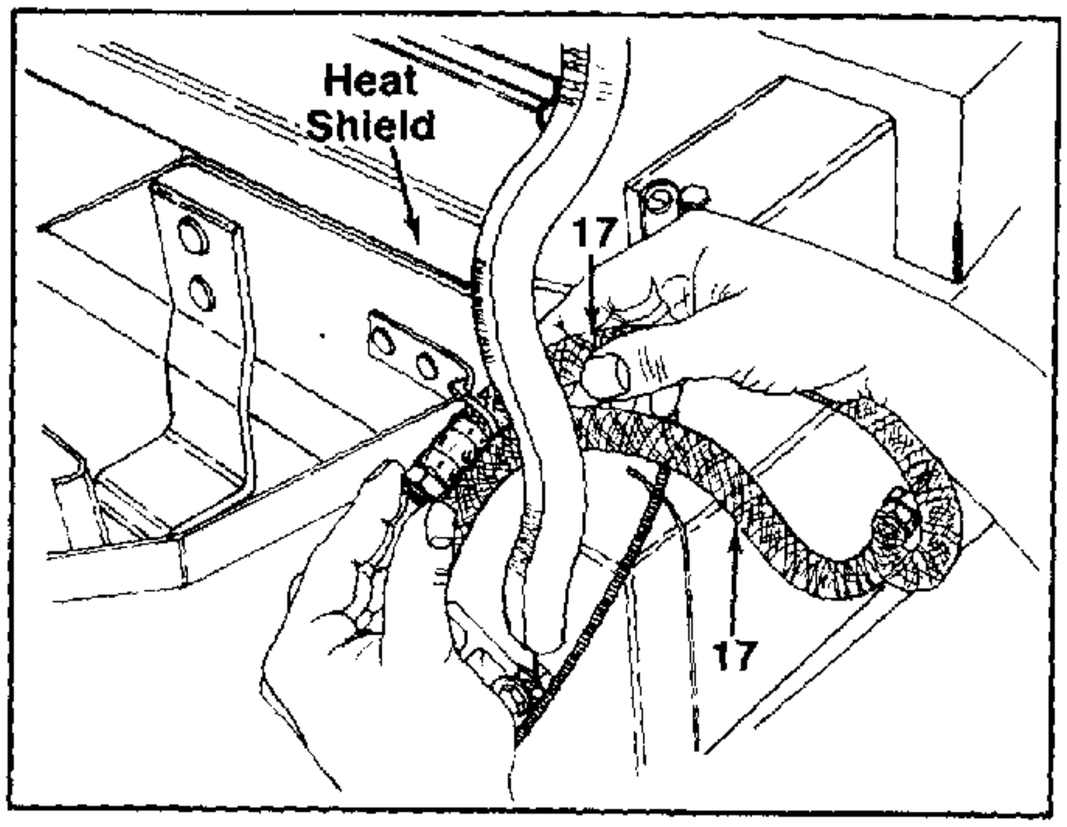

FIGURE 13.

16. Slide the two oil lines through the heat shield. See figure 13. Oil lines will stay with engine.

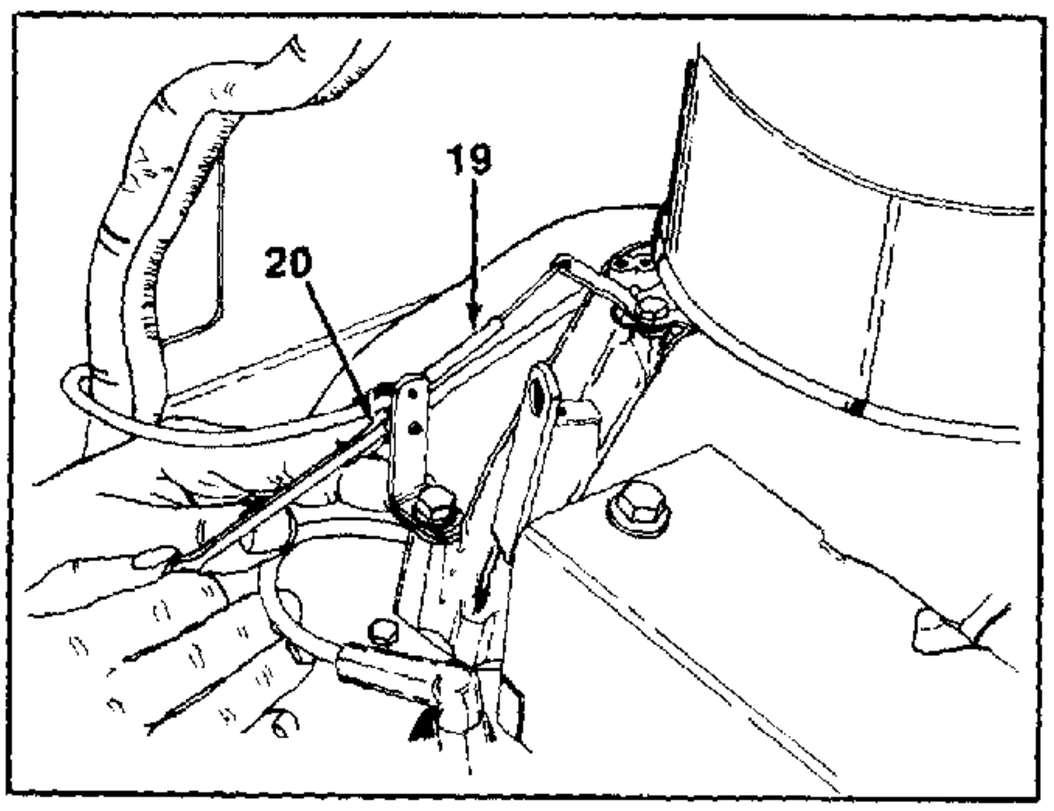

FIGURE 14.

17. Disconnect the throttle control cable, located on the right hand side of engine using a ¼" wrench. Loosen the hex bolt and cable clamp. See figure 14. Unhook the end of throttle cable and remove.

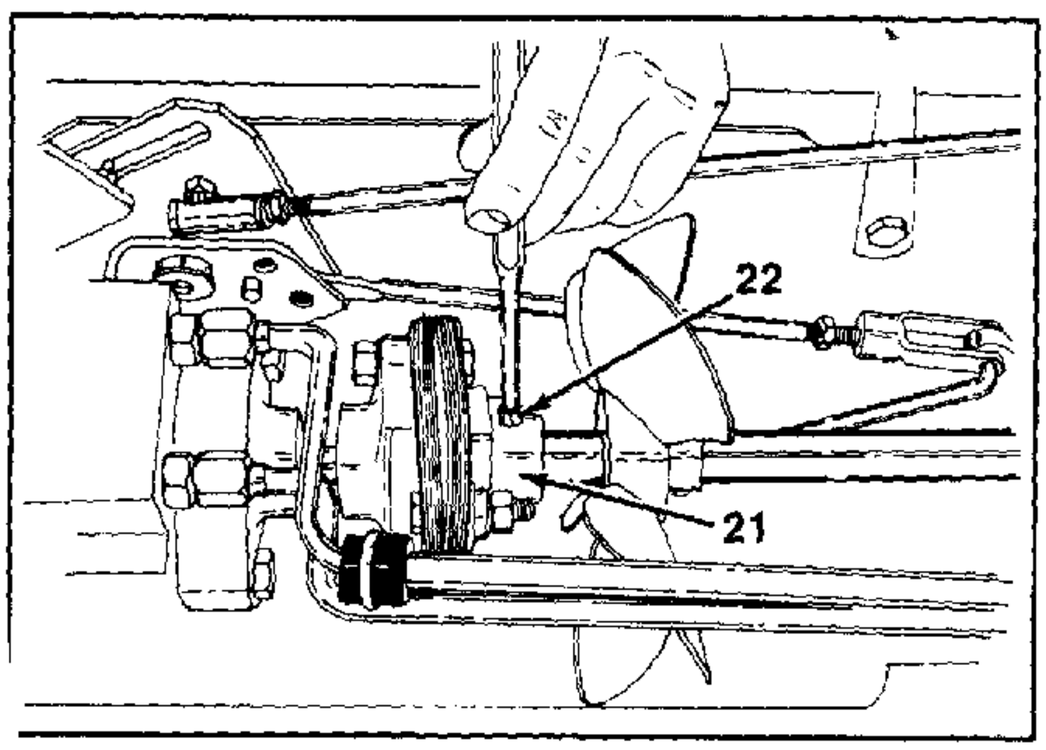

FIGURE 15.

18. Remove the roll pin on the casting (coupling) on the drive shaft at the rear of tractor just in front of pump. See figure 15.

17. Oil Lines
19. Throttle Control Cable
20. Cable Clamp
21. Coupling (Casting)
22. Roll Pin

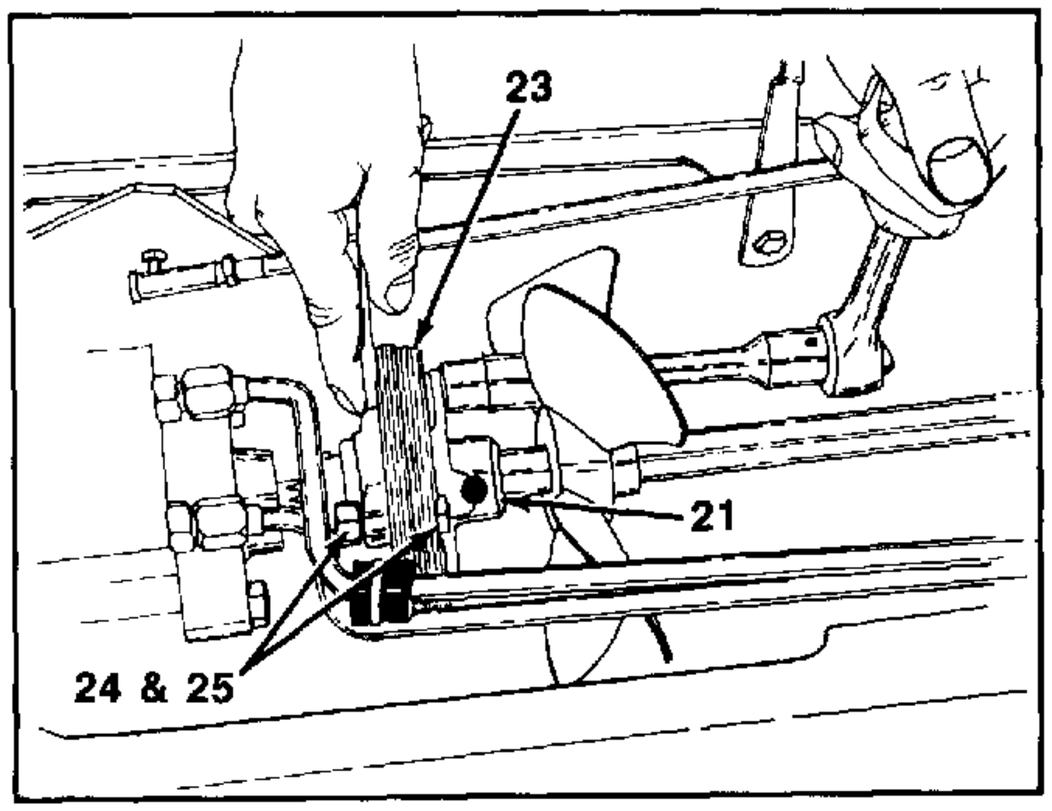

FIGURE 16.

19. Remove the two hex nuts and hex bolts at rear coupling and flexible disc. See figure 16.

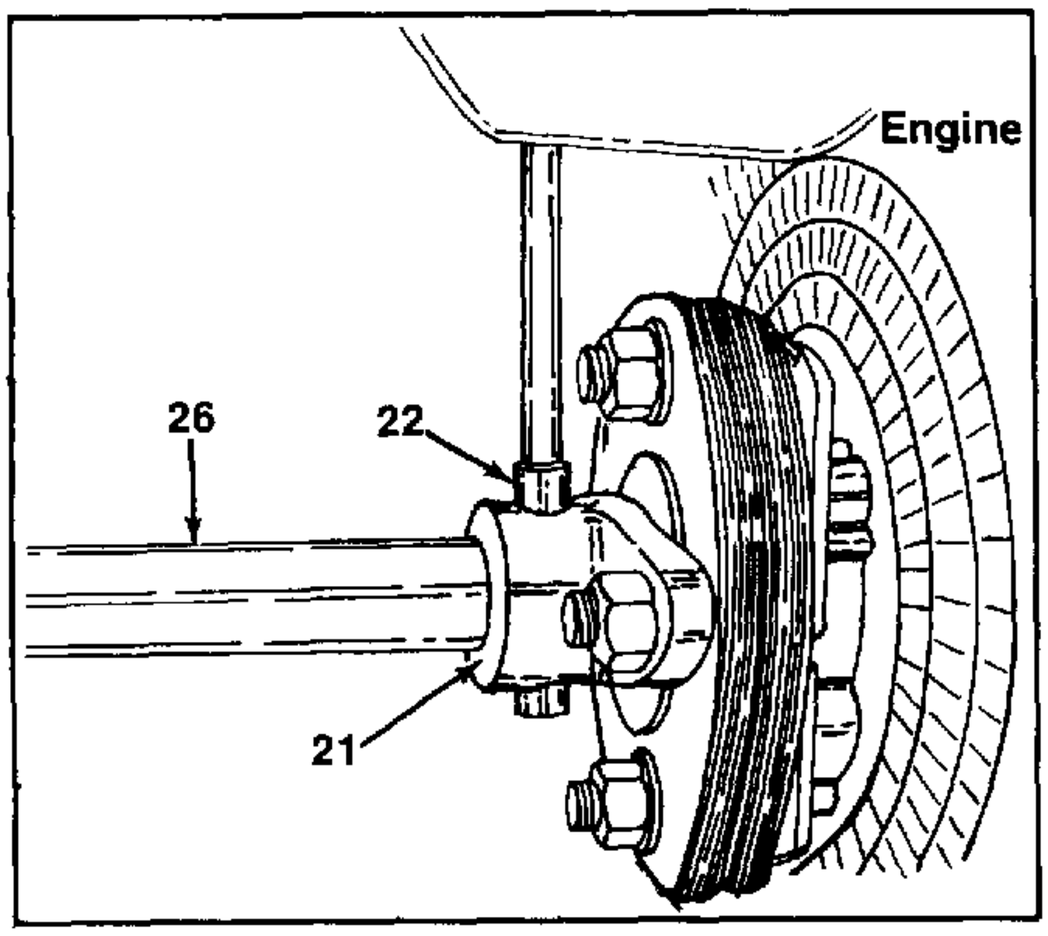

FIGURE 17.

20. Move to the front of tractor and remove the roll pin from casting (coupling) and drive shaft. See figure 17.

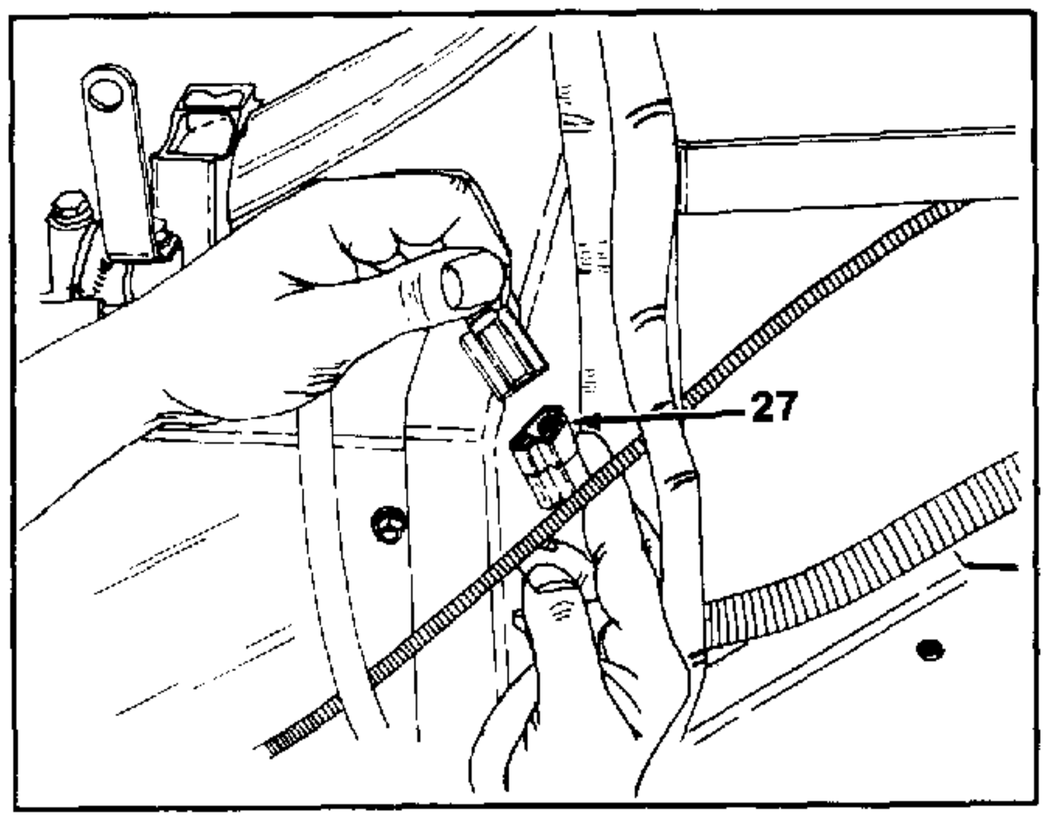

FIGURE 18.

21. Disconnect the main wire harness from engine. See figure 18.

21. Coupling (Casting)
22. Roll Pin
23. Flexible Disc
24. Hex Bolt
25. Hex Nut
26. Drive Shaft
27. Main Wire Harness

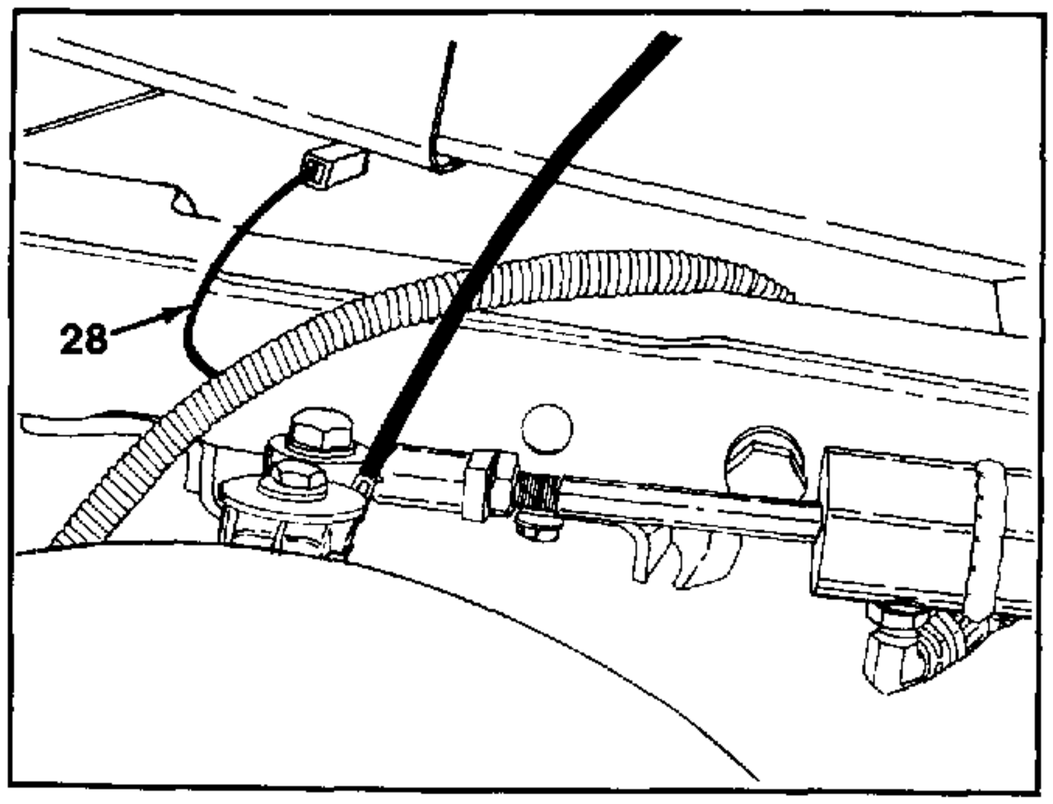

FIGURE 19.

22. Disconnect the wire lead to the electric clutch, located on the left hand side of unit. See figures 19 and 20.

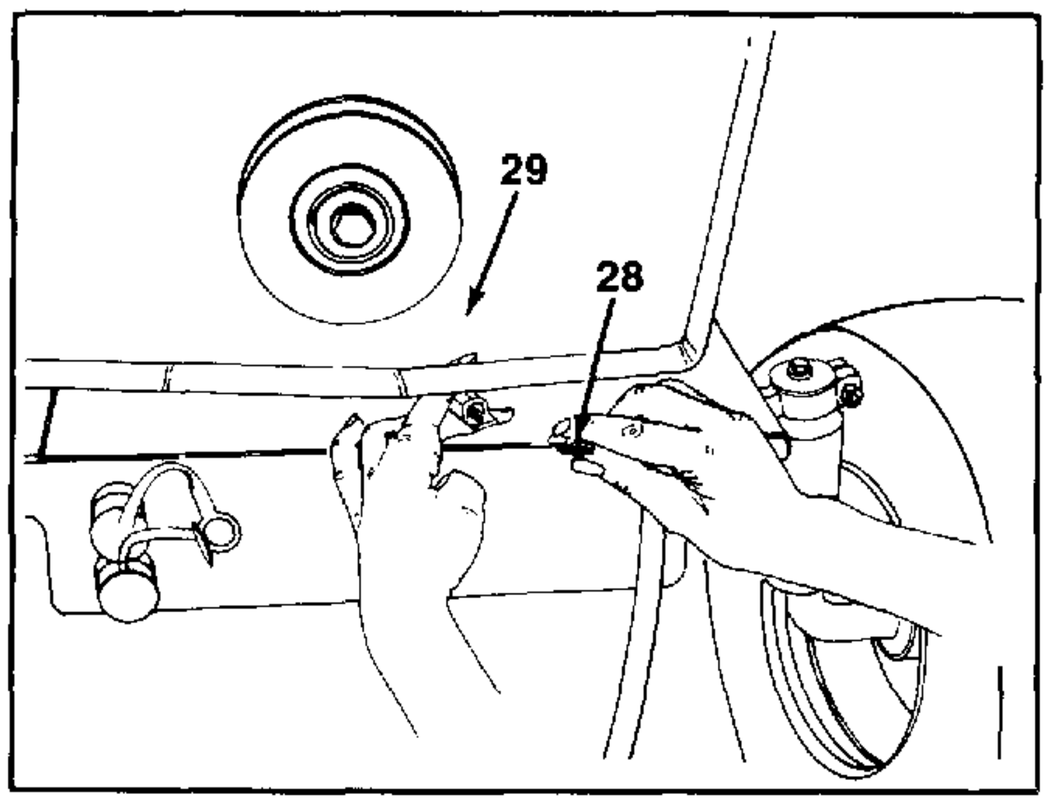

FIGURE 20.

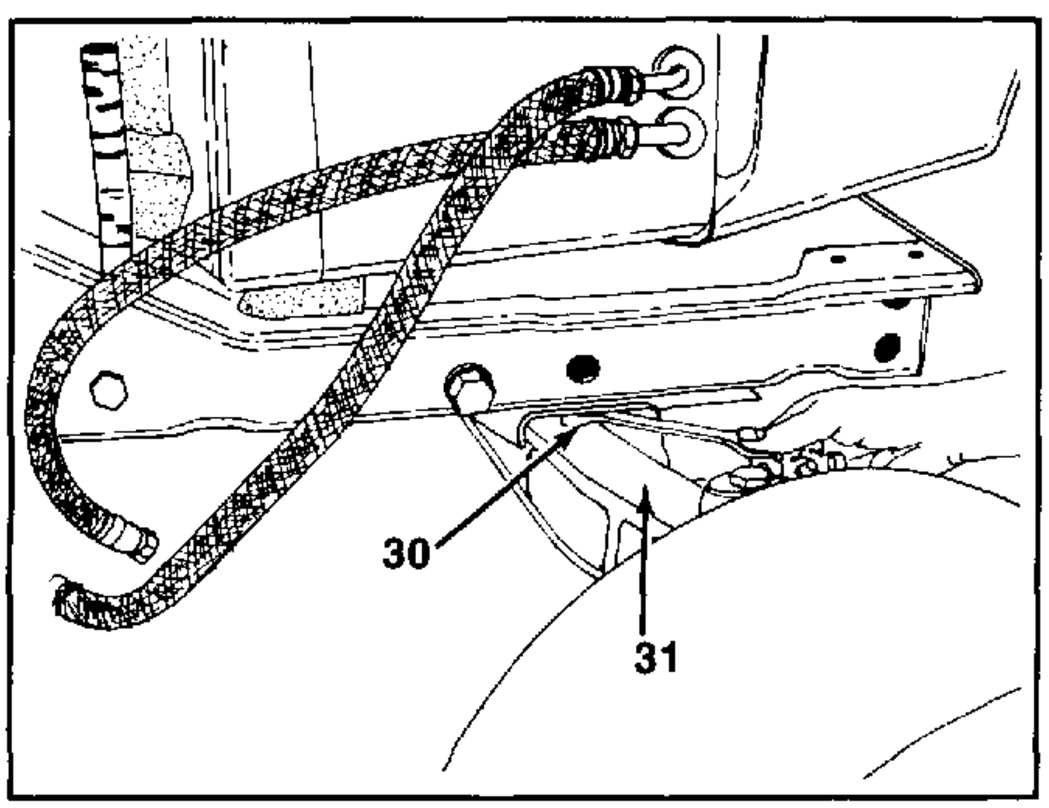

FIGURE 21.

23. Now you can remove the engine and engine cradle as one unit. Remove six bolts from under the chassis. Two of the bolts are just above the pivot bar and require an open-end wrench. See figure 21.

28. Wire Lead
29. Electric Clutch
30. Hex Bolt
31. Pivot Bar

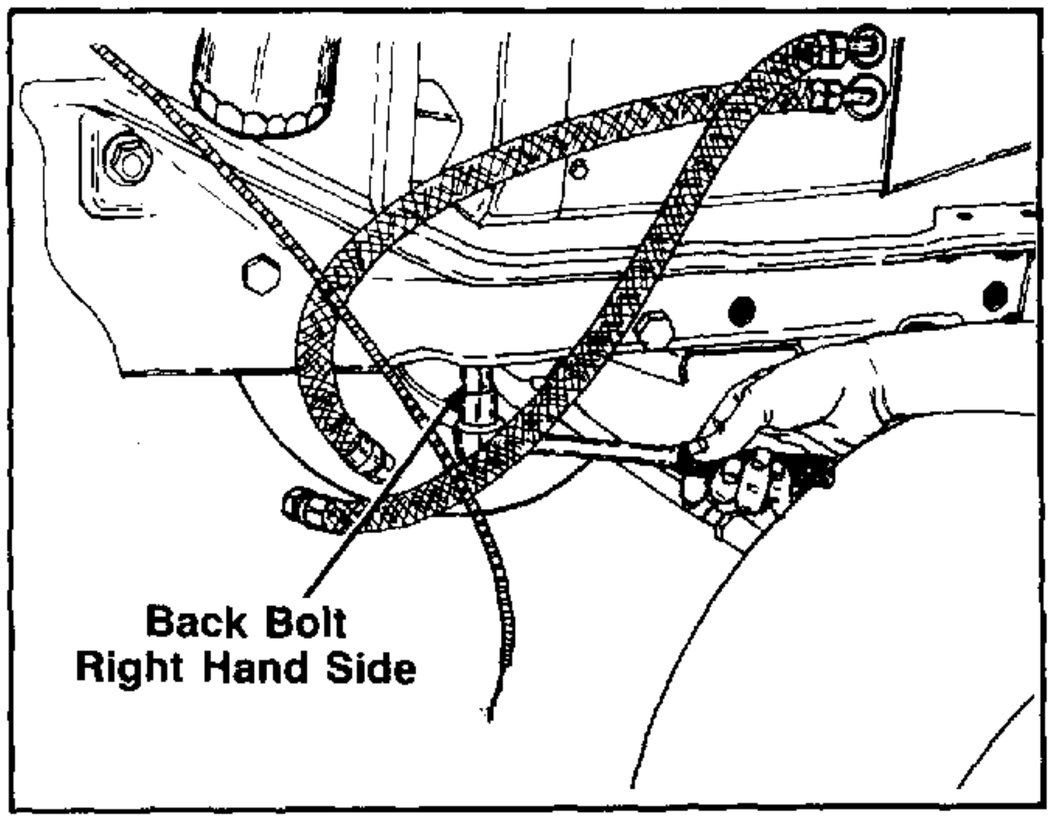

FIGURE 22.

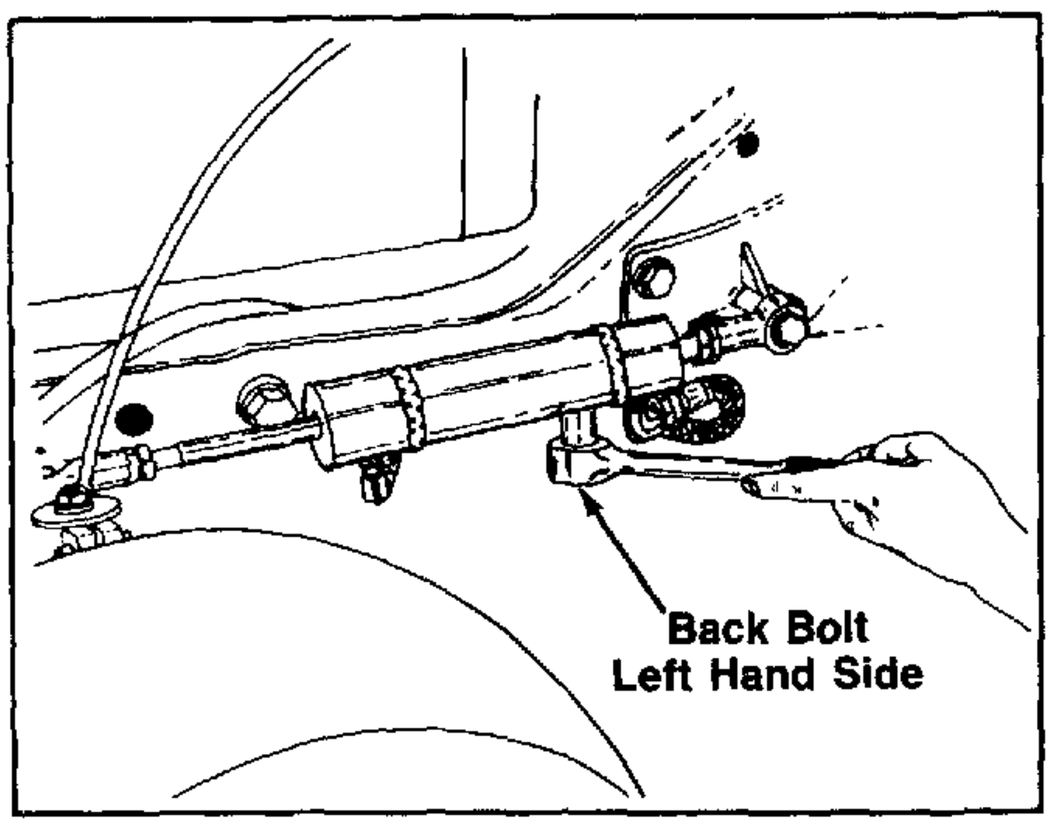

FIGURE 23.

24. Remove the four remaining bolts from engine cradle and chassis. See figures 22 and 23.
25. Upon lifting the engine and engine cradle out of the tractor, you will have to move the engine forward enough to allow the drive shaft to drop out of coupling.
26. Take care in lifting the engine out of frame; if tractor is equipped with front hydraulic lines, pull lines out of the way.

TRACTOR SERVICE MANUAL FOR GARDEN TRACTORS
S/N 737,625 - 799,999

SECTION 1. ENGINE

SECTION 2. CHASSIS

SECTION 3. DRIVE SYSTEMS AND HYDRAULICS

SECTION 4. ATTACHMENTS

SECTION 5. SAFETY

CHASSIS

Contents

	Page
Special Torques	2-2
Steering Assembly—Mechanical Garden Tractor	2-3
Steering Assembly—Mechanical Super Garden Tractor	2-7
Front Wheels and Bearings	2-8
Front Axle	2-9
Power Steering Attachment for Super Garden Tractor	2-10
Servicing the Power Steering	2-22
Electrical Systems	2-54
Battery Information	2-62
Brake Adjustments—Garden Tractor	2-63

SPECIAL TORQUES

Gear Drive
- Reduction gear ..... 75 N•m (55 ft. lbs.)
- Transmission countershaft nut ..... 115 N•m (85 ft. lbs.)
- Transmission countershaft bearing retainers ..... 27 N•m (20 ft. lbs.)
- Reduction housing to transmission ..... 108 N•m (80 ft. lbs.)

Hydrostatic Drive
- Charge pump capscrews ..... 71 N•m (52 ft. lbs.)
- Hydrostatic cover to hydrostatic unit center section ..... 47 N•m (35 ft. lbs.)
- Motor swash plate 12 point capscrews ..... 91 N•m (67 ft. lbs.)
- Hydrostatic unit to differential housing ..... 40 N•m (30 ft. lbs.)

General
- Wheel lug bolts ..... 76 to 85 N•m (56 to 63 ft. lbs.)
- Steering wheel ..... 43 to 50 N•m (32 to 37 ft. lbs.)
- Steering sector jam nut ..... 54 N•m (40 ft. lbs.)
- Cam follower lock nut ..... 54 N•m (40 ft. lbs.)
- Front wheel capscrews
  - Garden Tractors ..... 47 to 54 N•m (35 to 40 ft. lbs.)
  - Super Garden Tractors ..... 88 to 102 N•m (65 to 75 ft. lbs.)
- Drag link and tie rod ball joint nuts
  - Garden Tractors
    - (tighten to align cotter pin hole) ..... 20 N•m (15 ft. lbs.)
  - Super Garden Tractors
    - 3/8 inch (tighten to align cotter pin hole) ..... 41 N•m (30 ft. lbs.)
    - 1/2 inch (tighten to align cotter pin hole) ..... 54 N•m (40 ft. lbs.)

STEERING ASSEMBLY
MECHANICAL GARDEN TRACTOR

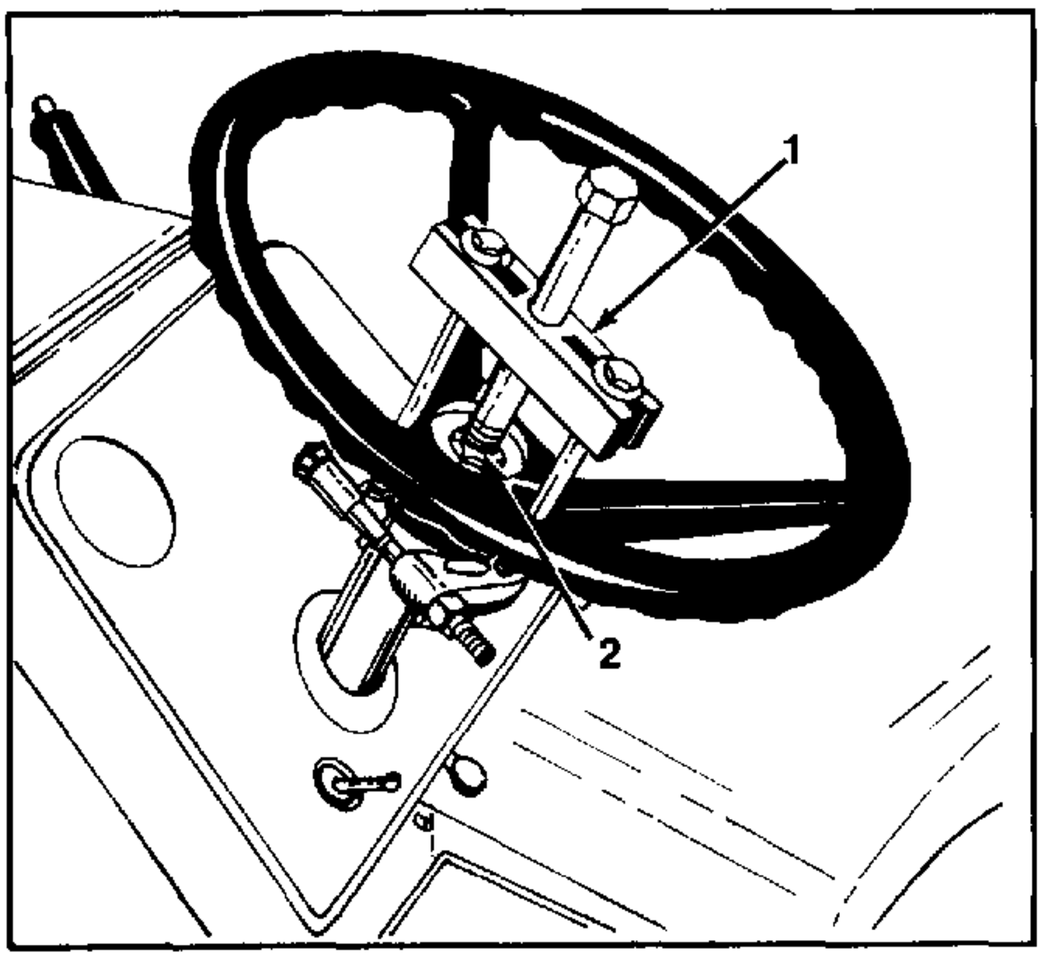

FIGURE 1.

1. Puller Assembly
2. 3/8 Inch Bolt

REMOVAL

1. Remove the steering wheel cover.
2. Remove the nut securing the wheel to the column.
3. Place a 3/8 inch bolt into the column to protect the column end from damage. Remove the steering wheel using a puller as shown.

For Model 782:

Disconnect the hydraulic lines (from the transmission) at the control valve. Remove the connecting link(s) from the control valve spools. Remove the control valve from the mounting plate. Scribe a line on the steering column just above and below the control valve mounting plate and remove the mounting plate.

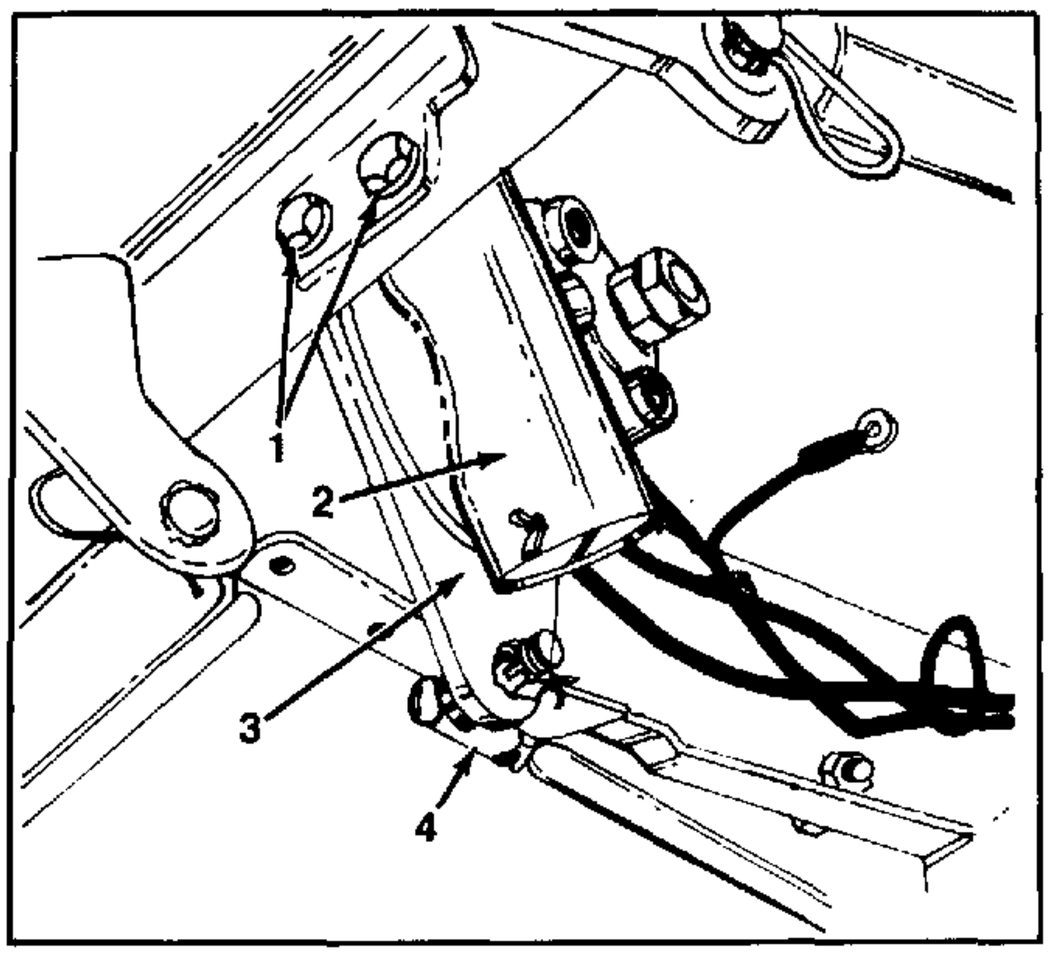

FIGURE 2.

4. Disconnect the drag link rear ball joint from the steering lever.
5. Remove the mounting bolts securing the unit. Remove the steering assembly by lowering it thru the control panel.

1. Mounting Bolts
2. Steering Unit
3. Steering Lever
4. Drag Link Rear Ball Joint

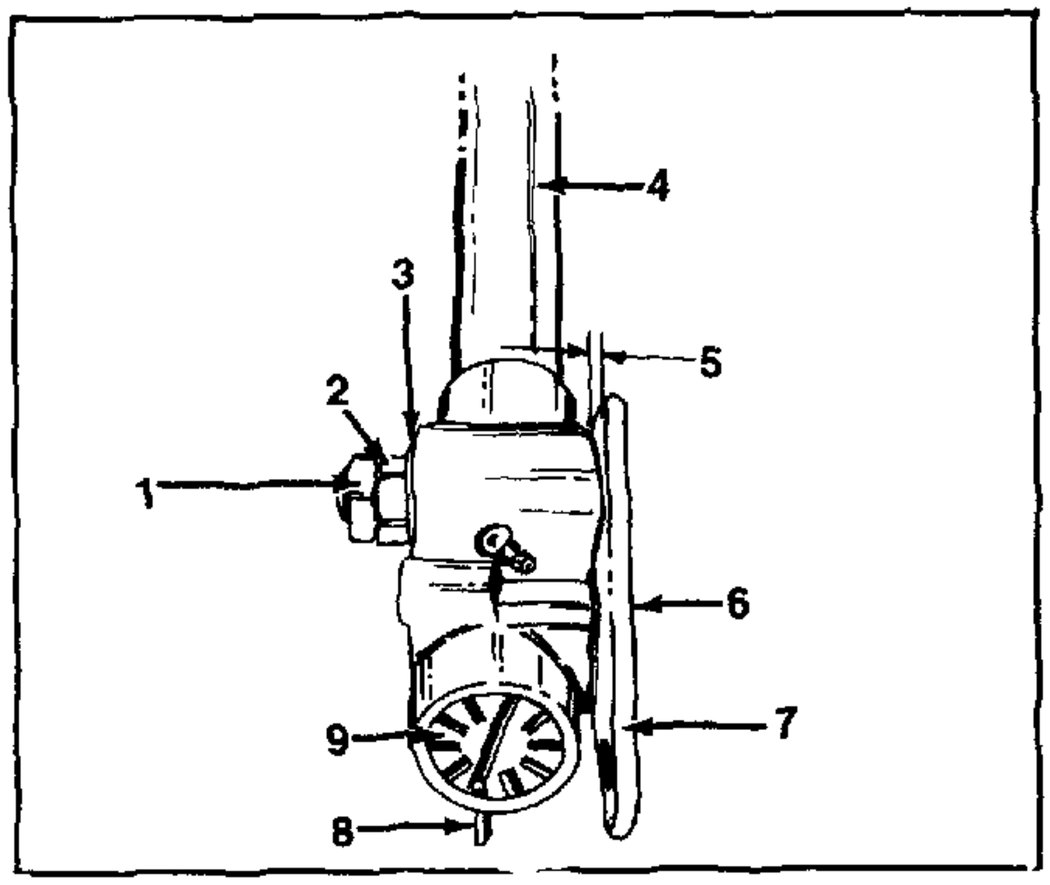

FIGURE 3.

1. Jam Nut
2. Adjusting Nut
3. Washer
4. Steering column
5. 2.4 mm gap (3/32 inch)
6. Cam Follower With Lock Nut
7. Steering Lever
8. Cotter Pin
9. Adjusting Plug

DISASSEMBLY

1. Secure the steering lever and bolt in a vise.
2. Remove the lever bolt jam nut, adjusting nut and washer.
3. Slide the column and housing assembly away from the lever, bolt and cam follower.
4. Remove the adjusting plug.
5. Remove the steering cam and bearings from the *housing*.

INSPECTION AND REPAIR

1. Wash all parts in cleaning solvent, then dry thoroughly.
2. Inspect the cam follower for wear (flat spots).
3. Inspect the cam ends, bearings and races for wear, roughness and pitting.
4. Inspect the cam grooves for wear, roughness and galling.
5. Inspect the housing for cracks and stripped threads.
6. Inspect the upper bearing (nylon bushing) for wear or damage.

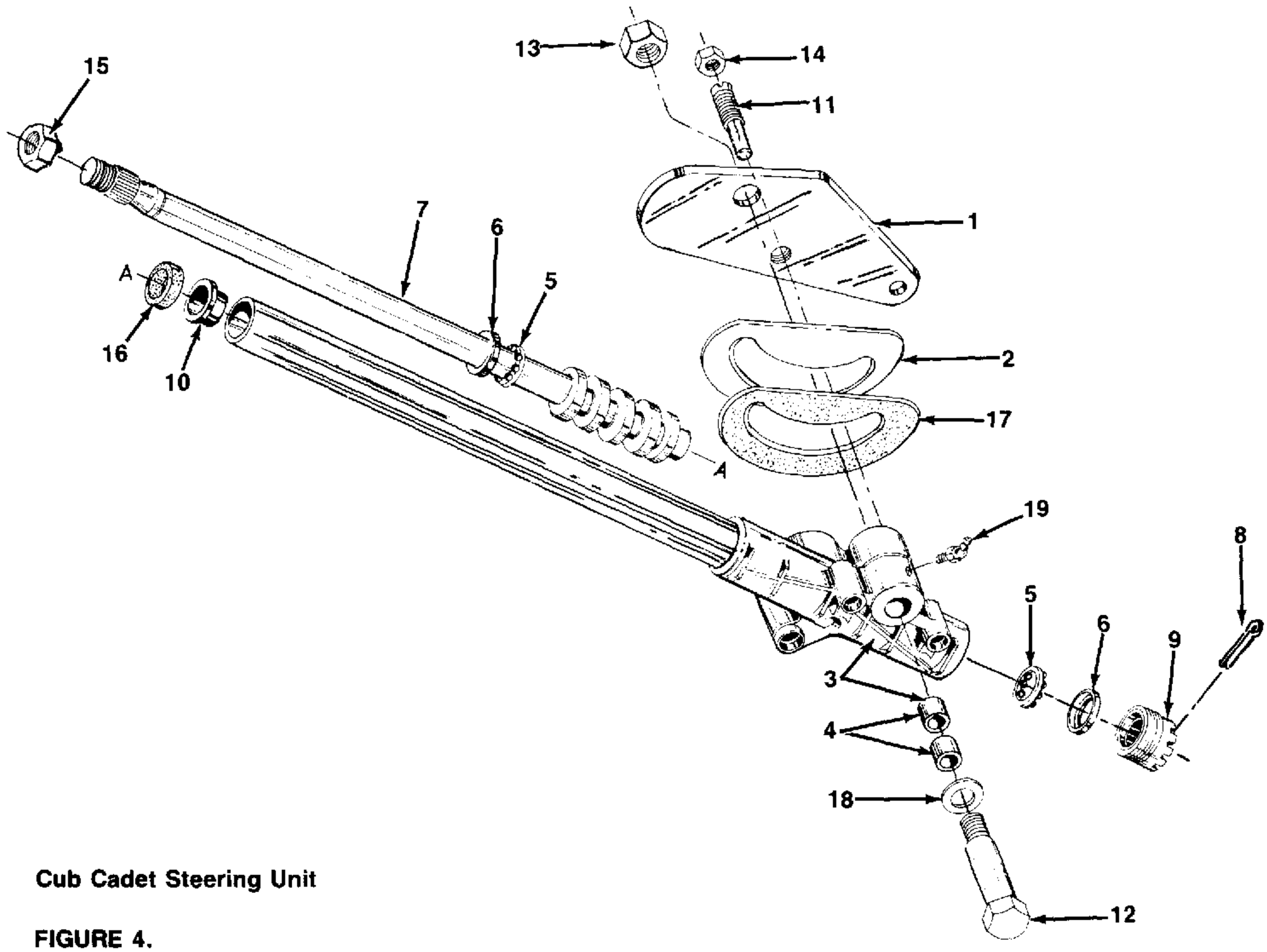

Cub Cadet Steering Unit

FIGURE 4.

FOR UNITS WITH SERIAL NO. 753228 AND ABOVE

Item	Part No.	Description	Qty.	Item	Part No.	Description	Qty.
	703-1085	Steering Gear Assembly	1	11	711-3149	Cam Follower	1
1	703-1082	Arm Steering	1	12	711-3208	Shaft, Pivot	1
2	703-1031	Retainer, Seal	1	13	712-3063	Nut, Hex Crown Lock 5/8-18	1
3	703-1027	Housing and Tube Assembly (Includes Ref. No. 4)	1	14	712-3062	Nut, Hex Jam 9/16-18	1
				15	712-3056	Nut, Hex Jam 5/8-18	1
4	748-3008	Bushing	2	16	723-3040	Seal, Column	1
5	741-3021	Retainer Assembly, Ball	2	17	723-3039	Seal, Grease	1
6	703-1029	Bearing Cup	2	18	736-3029	Washer, Flat .781 x 1.25 x .027	1
7	703-1030	Cam and Tube Assembly	1				
8	714-0474	Pin, Cotter	1	19	737-3001	Fitting, Grease 45 Deg. 1/4-28 Taper	1
9	719-3053	Plug, Adjusting	1				
10	741-3023	Bearing, Column	1				

REASSEMBLY AND ADJUSTMENT

1. Thoroughly coat the cam ends, balls and races with IH 251H E.P. (or equivalent lithium base grease).
2. Install the balls and races on the cam ends.
3. Thoroughly coat the cam with chassis lubricant, then install into the housing and column assembly.

NOTE: Be sure the races enter the housing squarely and are not "cocked."

4. Install the adjusting plug. Screw the plug inward until end play of the cam is removed but turns freely. Insert the cotter pin in the nearest hole.

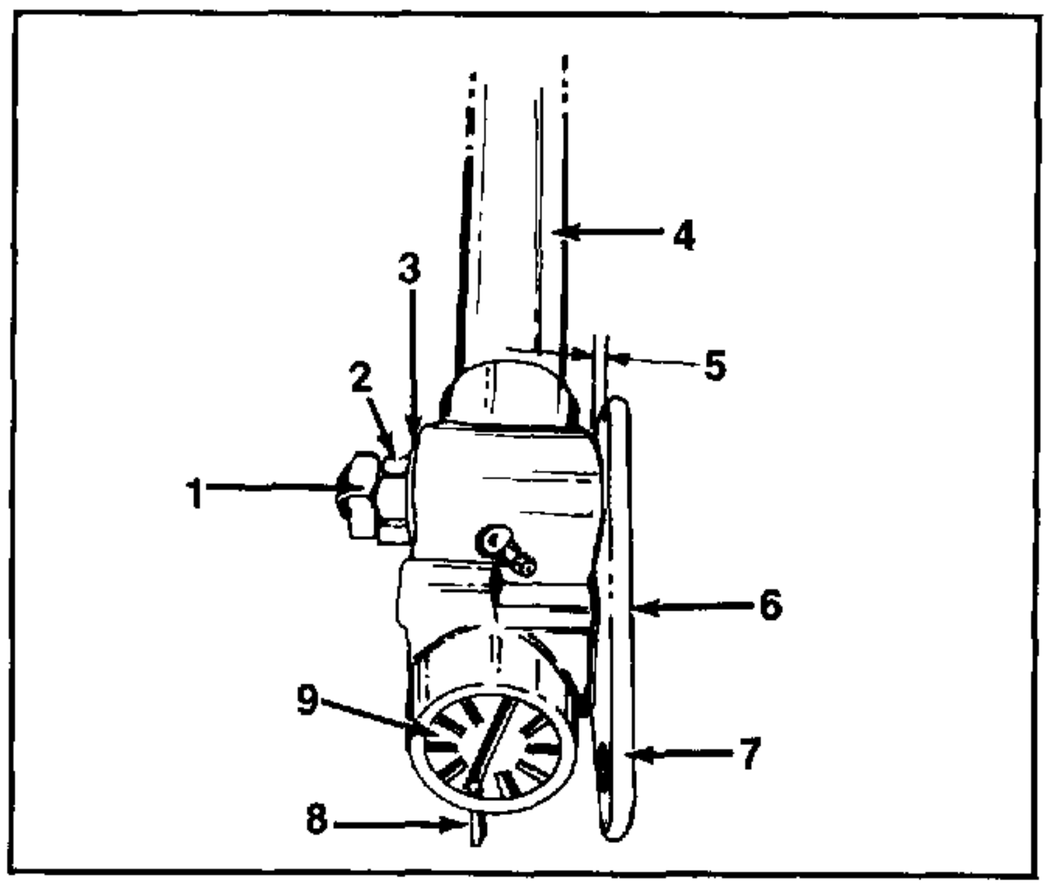

FIGURE 5.

1. Jam Nut
2. Adjusting Nut
3. Washer
4. Steering Column
5. 2.4 mm gap (3/32 inch)
6. Cam Follower with Lock Nut
7. Steering Lever
8. Cotter Pin
9. Adjusting Plug

5. Fill the housing with IH 251H E.P. (or equivalent lithium base grease).
6. Loosen the cam follower lock nut, then back out the cam follower two turns.
7. Install the seal, retainer and lever bolt assembly to the housing.
8. Install the washer and adjusting nut. Tighten the adjusting nut sufficiently to provide good seal compression. Refer to illustration for adjustment dimensions. Secure with the jam nut. Tighten jam nut to 54 N•m (40 ft. lbs.). Lubricate at the fitting in the housing slowly until lubricant begins to seep out.
9. Center the steering cam by rotating the steering shaft half-way between full right and full left turn.
10. Adjust the cam follower inward to eliminate backlash, then tighten lock nut to 54 N•m (40 ft. lbs.). Turn steering shaft full right and left to check for binding.
11. Install the steering assembly in the tractor chassis. Secure with two capscrews through the frame cross member.
12. Connect the drag link.
13. Install the steering wheel and secure with nut.

FOR MODEL 782:

a. Install the control valve mounting plate aligning it with the scribe marks on the column.

b. Install the control valve and connect the hydraulic lines. Install the connecting link(s).

14. Adjust the tie rod to provide .8 to 3 mm (1/32 to 1/8 inch) toe-in as follows:

a. With the wheels straight ahead place a chalk mark on each rim at points "A" (wheel hub height). Measure the distance between the two points.

b. Move the tractor straight forward a distance equal to one-half revolution of the front wheels. The chalk marks will now be at points "B."

c. Measure the distance between points "B." This distance must be .8 to 3 mm (1/32 to 1/8 inch) **less than** distance "A."

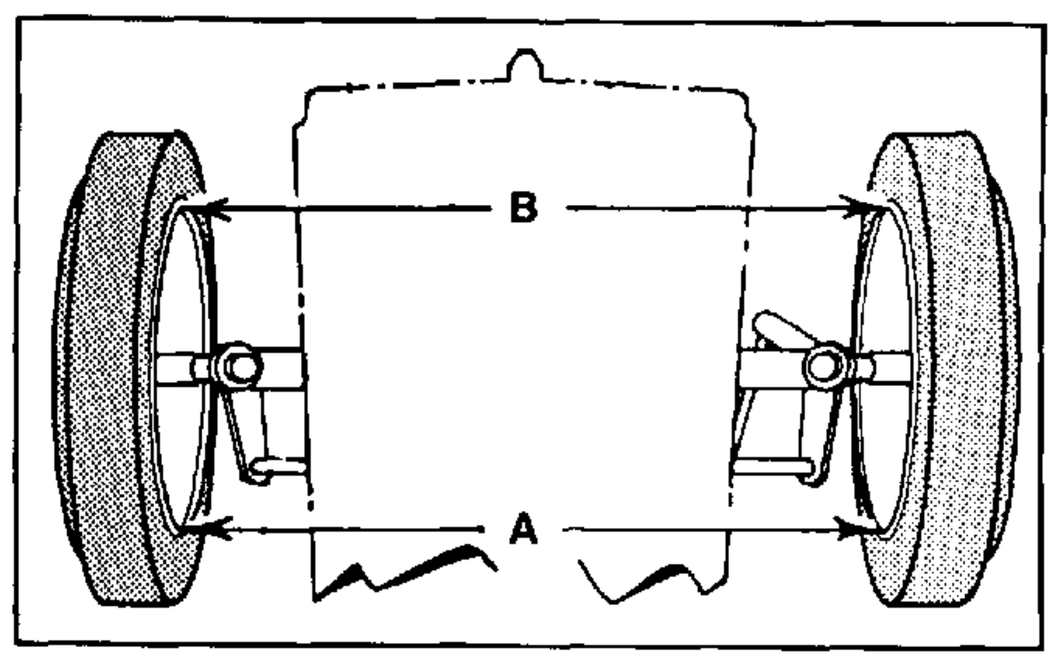

FIGURE 6.

d. To adjust, remove one of the tie rod ball joints and loosen the lock nut.

e. Screw the ball joint in or out to obtain the specified toe-in and tighten the lock nut.

f. Connect the ball joint to the steering knuckle and be sure to install the cotter pin.

15. Adjust the drag link to the proper length to place the front wheels in the straight ahead position when the steering assembly is centered.

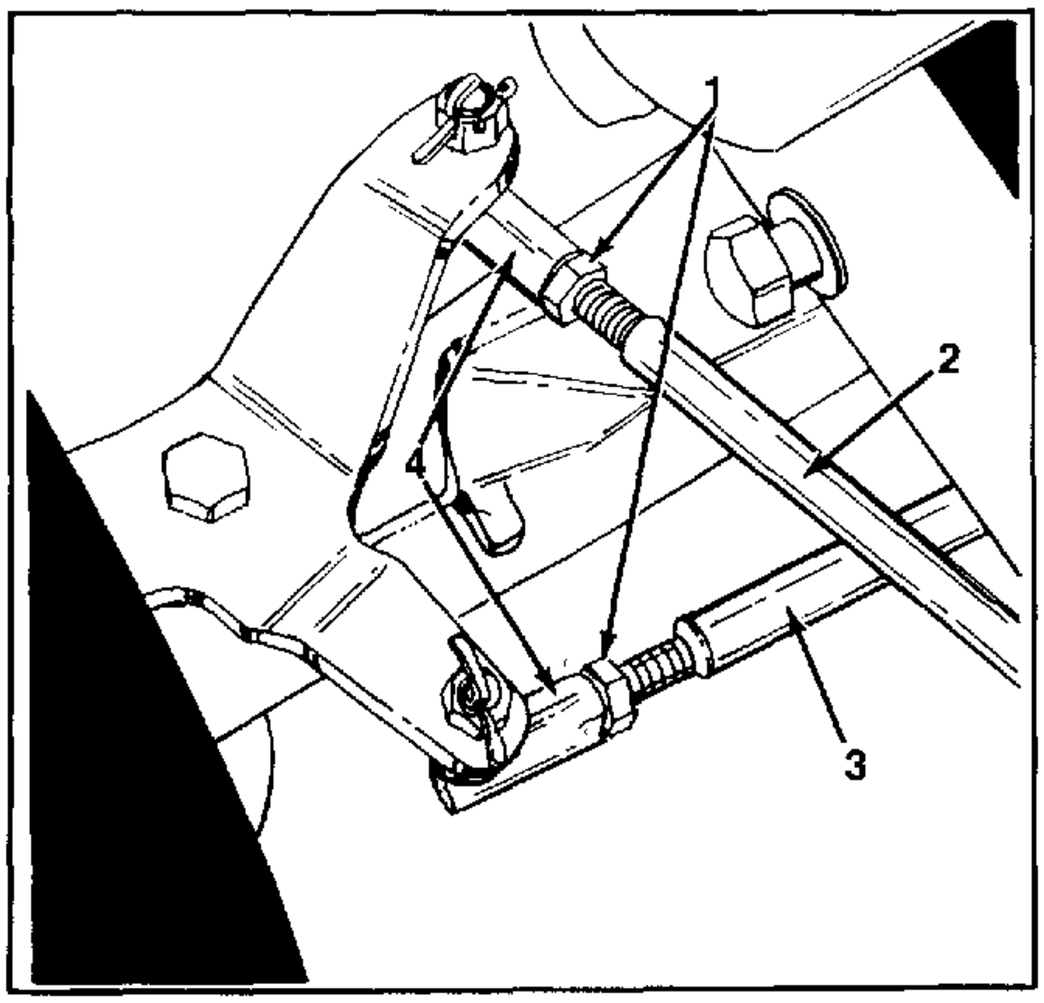

1. Lock Nuts
2. Drag Link
3. Tie Rod
4. Ball Joints

FIGURE 7.

STEERING ASSEMBLY MECHANICAL SUPER GARDEN TRACTOR

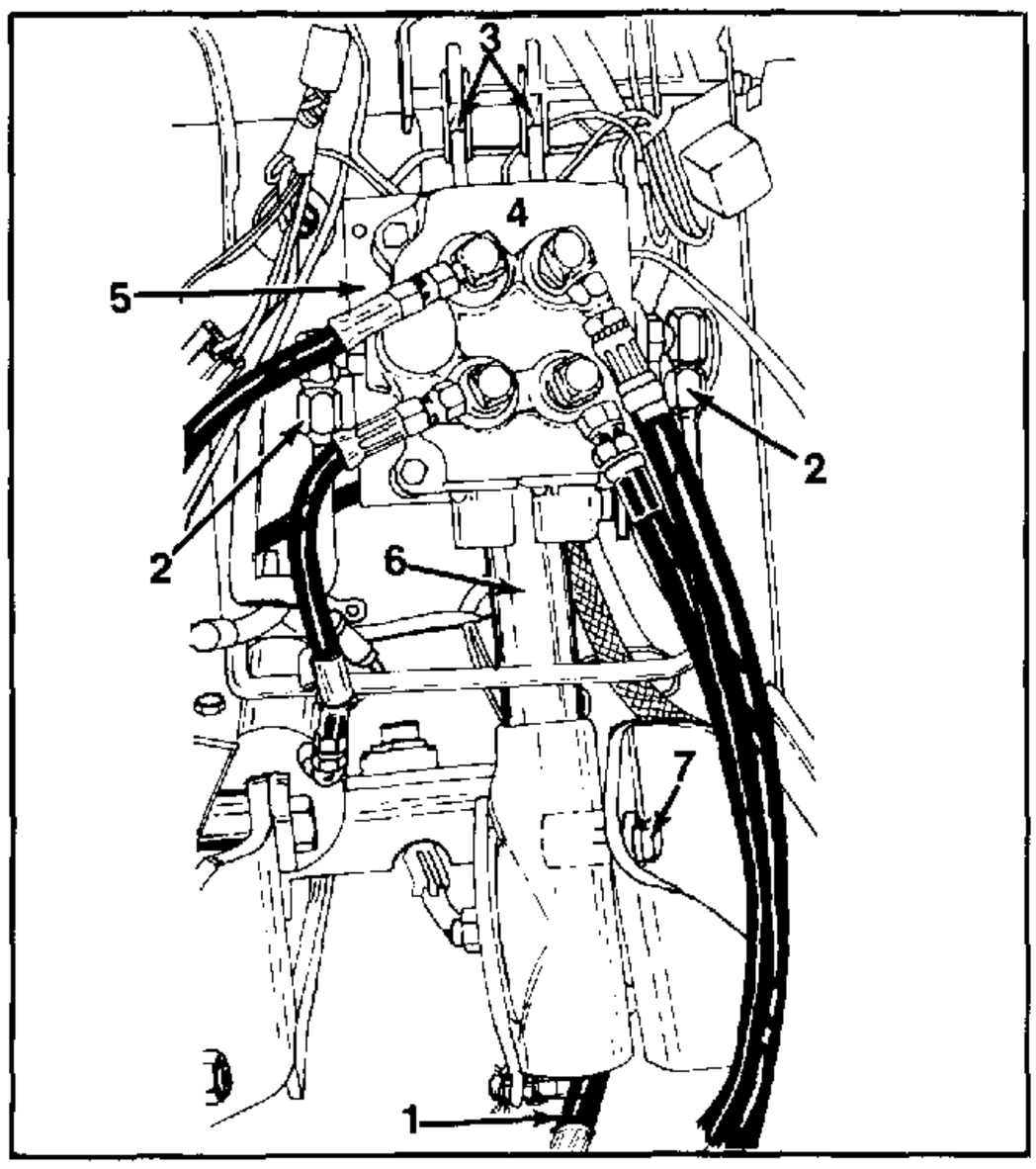

FIGURE 8.

REMOVAL

1. With the front wheels held in the straight ahead position, remove the steering wheel. The steering wheel is fitted on a tapered shaft and may require a puller for removal.
2. Shut off the fuel at the fuel tank. Disconnect the fuel line. Remove the fire wall and fuel tank as an assembly.
3. Remove the drag link rear ball joint from the steering lever.
4. Disconnect the hydraulic lines (from the transmission) at the control valve. Remove the connecting links from the control valve spools. Remove the control valve from the mounting plate. Scribe a line on the steering column just above and below the control valve mounting plate. Remove the mounting plate.
5. Remove the three steering column assembly mounting bolts. Lower the steering column assembly to remove it.

1. Drag Link Rear Ball Joint
2. Hydraulic Lines
3. Connecting Links
4. Control Valve
5. Control Valve Mounting Plate
6. Steering Column
7. Steering Column Assembly Mounting Bolts

FRONT WHEELS AND BEARINGS

REMOVAL

1. Lock the brake and block the rear wheels. Jack up the front axle.
2. Remove the capscrew and flat washer from the outer end of the front spindle.
3. Slide the wheel and bearings from the spindle.

NOTE: The bearings are a press fit in the wheel and a slip fit on the spindle.

4. Wheel bearings can be driven from the wheel hub with a hammer and long drift punch. Drive from the inside toward the outside.

INSPECTION AND REPAIR

1. Inspect the entire wheel and hub for wear or damage.
2. Bearings and seal should be inspected and replaced as necessary.
3. Bearing fit to wheel must be tight. If not, replace the wheel.

REASSEMBLY

1. If the bearings were removed, lubricate and press in new ones. Be sure force is directed to the outer race only.
2. Slide the wheel and bearing assembly over the spindle and secure with the capscrew and flat washer.

FRONT AXLE
Models 582, 582 Special, 682 & 782

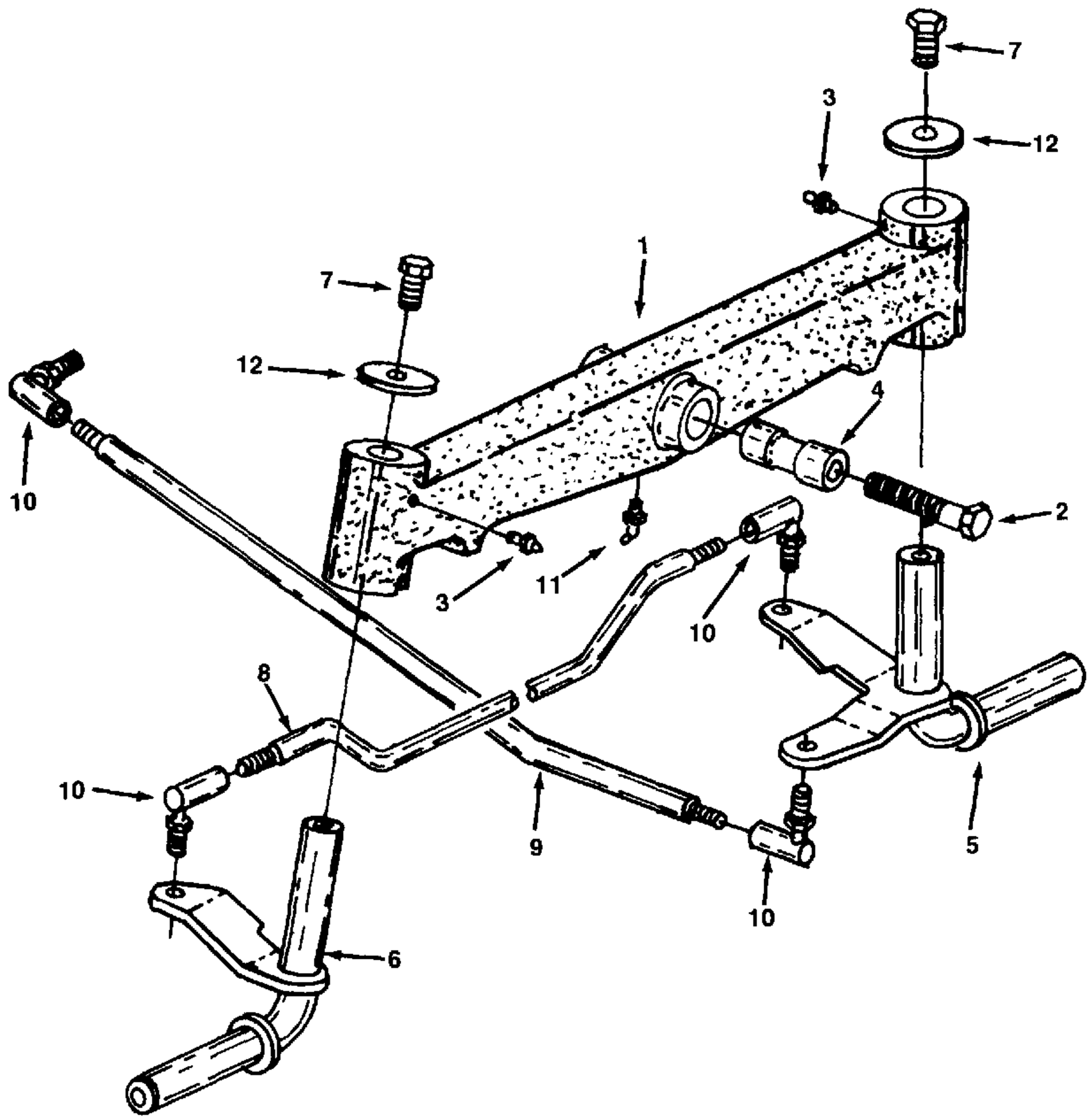

1. Axle, Front
2. Bolt, ½ x 4
   Nut, ½ Castle
   Pin, 1/8 x 1-¼ Cot.
3. Fitting, 3/16 Hole Lube -2-
4. Bushing, Axle Pivot
5. Knuckle Ass'y., L.H.
6. Knuckle Ass'y., R.H.
7. Bolt, 3/8 x 3/4 Type 5 -2-
8. Link, Drag
   Nut, 3/8-NF PLN Jam Type 5 -2-
9. Link, Drag
   Nut, 3/8-NF PLN Jam Type 5 -2-
10. Joint, 3/8 C-Z Type G Ball -4-
    Nut, 3/8-NF PLN Jam Type 5 -4-
11. Fitting, 3/16 45D Drive Type Lub
12. Washer, .406 x 1.500 x 11GA -2-

POWER STEERING ATTACHMENT FOR SUPER GARDEN TRACTORS

NOTE:

Right and left hand sides are determined from the operator's position on the tractor.

CONTENTS OF HARDWARE PACK:
(See Figure 1)

Ref.	Qty.	Description
A	2	Hex Bolt ½-20 x 1.50″ Lg. Gr. 5
B	2	Hex Bolt ½-13 x 1.25″ Lg. Gr. 5
C	2	Hex Bolt 3/8-16 x 1.25″ Lg. Gr. 5
D	2	Hex Bolt ½-20 x 1″ Lg. Gr. 5
E	4	Hex Jam Nut ½-20 Thd.
F	1	Hex Nut ½-20 Thd.
G	2	Hex Cent. L-Nut ½-13 Thd.
H	2	Hex Cent. L-Nut 3/8-16 Thd.
I	2	Fl-Wash. .531 x .688 x .054
J	2	Fl-Wash. .510 x 1.12 x .06
K	2	Fl-Wash. .385 x .87 x .06
L	2	L-Wash. 3/8″ I.D.
M	2	L-Wash. ½″ I.D.
N	1	Hex Bolt 5/16-18 x 1.38″ Lg.
O	2	Alignaball ½-20 Thd. x ½″ I.D.
P	1	Hex Bolt 3/8-24 x 1″ Lg.
Q	1	Hex Cent. L-Nut 5/16-18 Thd.
R	3	Hex Nut 5/16-24 Thd.
S	3	Bell-Wash. .388 x .88 x .06
T	1	Fl-Wash. .406 x 1.50 x .110

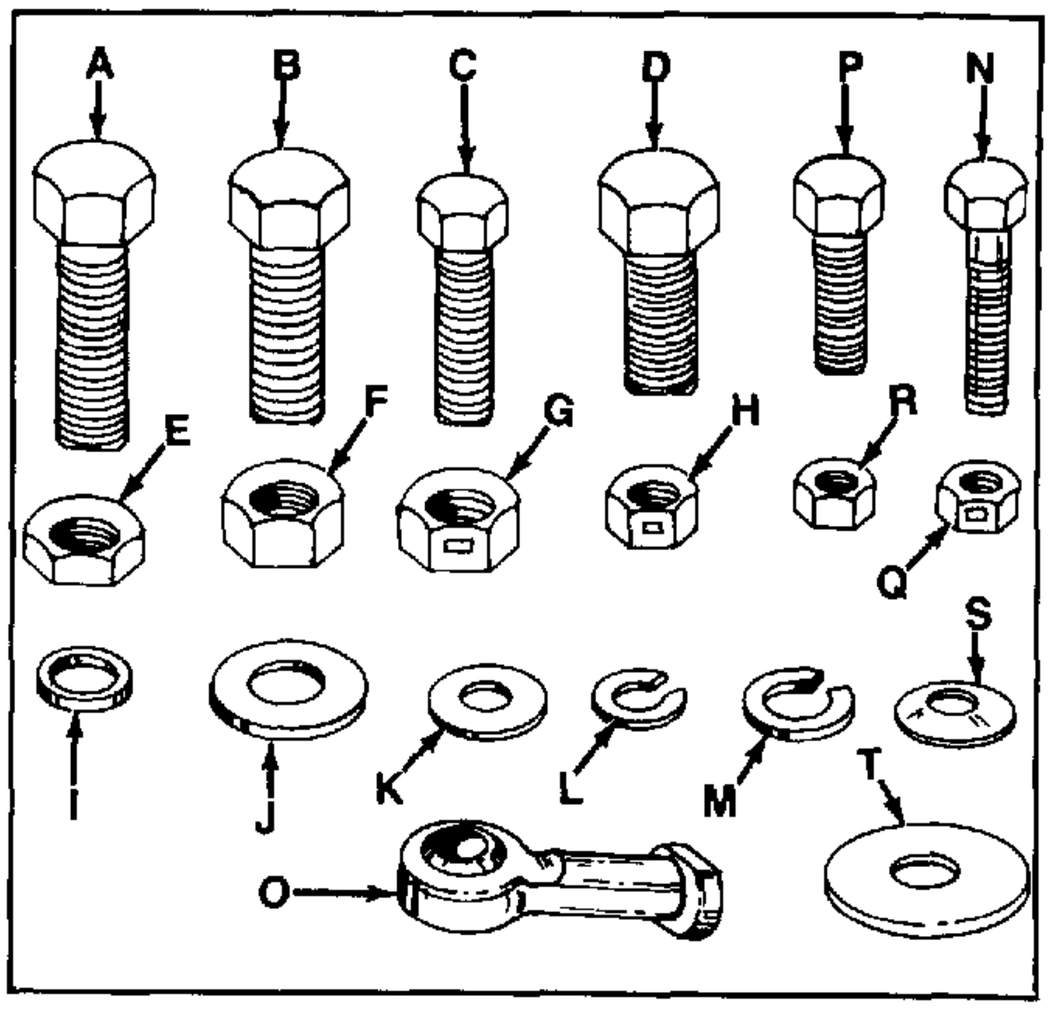

FIGURE 1.

CONTENTS OF HYDRAULIC PACK:
(See Figure 2)

Ref.	Qty.	Description
U	1	"T"-Fitting
V	1	Union
W	2	90° Tube Elbow Male/Female
X	2	90° Tube Elbow Male/Female

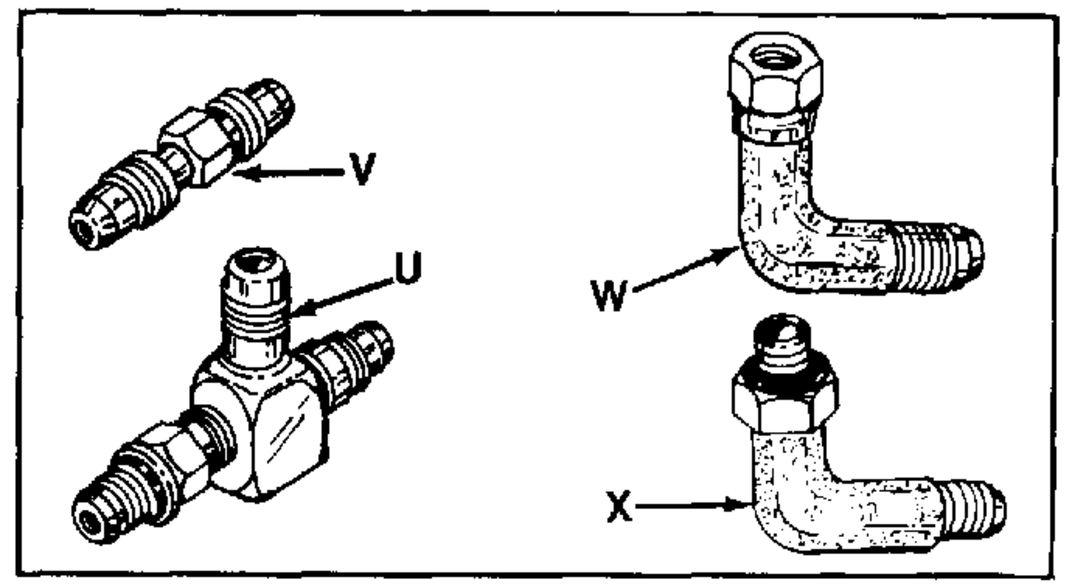

FIGURE 2.

CONTENTS OF LOOSE HOSES
(See Figure 3)

Ref.	Qty.	Description
Y	1	Pump Pressure Tube Ass'y.
Z	1	Valve Pressure Tube Ass'y.
AA	1	Pump Pressure Tube Ass'y.
AB	1	Valve Pressure Tube Ass'y.
AC	1	Steering Hose 10.5″ Lg.
AD	1	Steering Hose 8.9″ Lg.

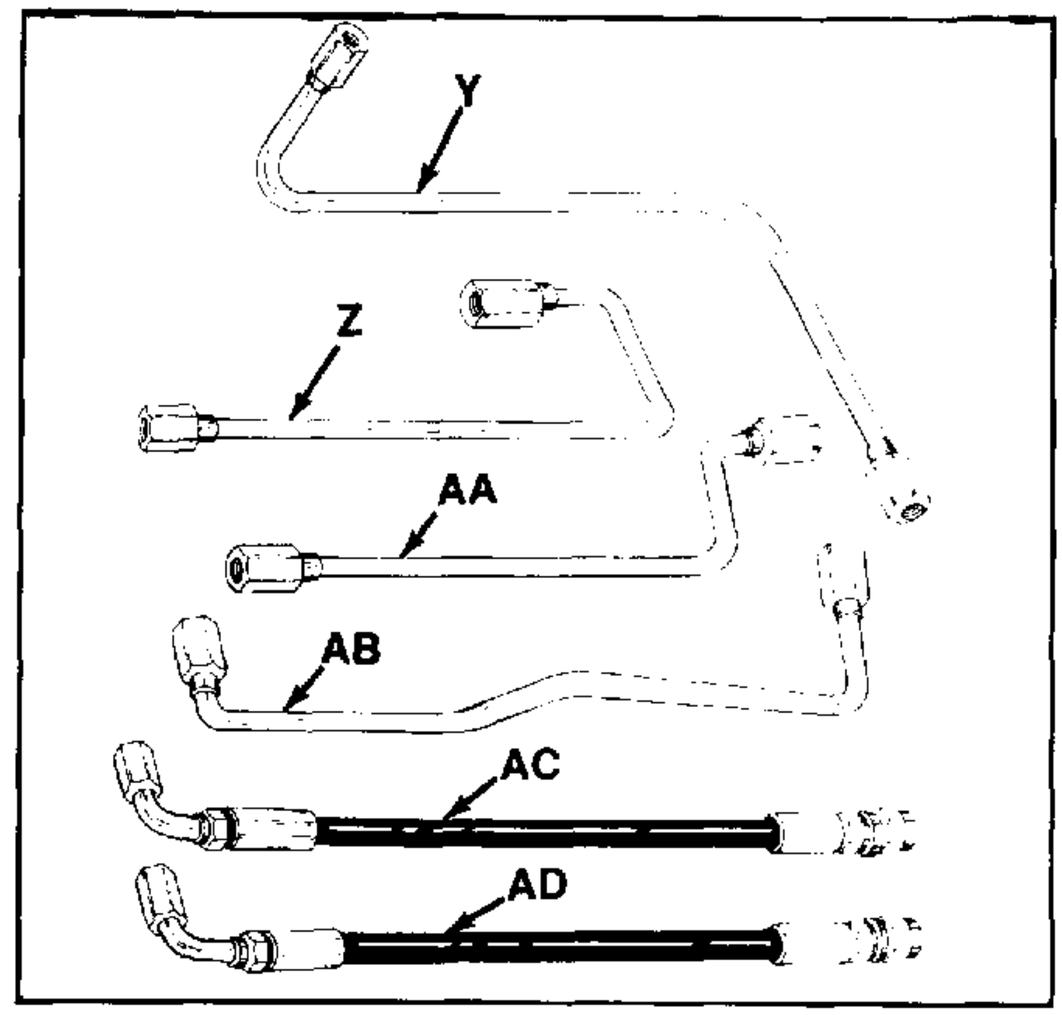

FIGURE 3.

CONTENTS OF LOOSE PARTS IN CARTON:
(See Figure 4)

Ref.	Qty.	Description	Ref.	Qty.	Description
AE	1	Steering Column Ass'y.	AJ	1	Steering Arm
AF	1	Steering Mount Bracket	AK	1	Front Frame Screen
AG	1	L.H. Axle Ass'y.	AL	1	Rear Frame Screen
AH	1	Cylinder Mounting Bracket	AM	1	R.H.—Pivot Bar Adj. Plate
AI	1	Power Steering Cylinder	AN	1	L.H.—Pivot Bar Adj. Plate

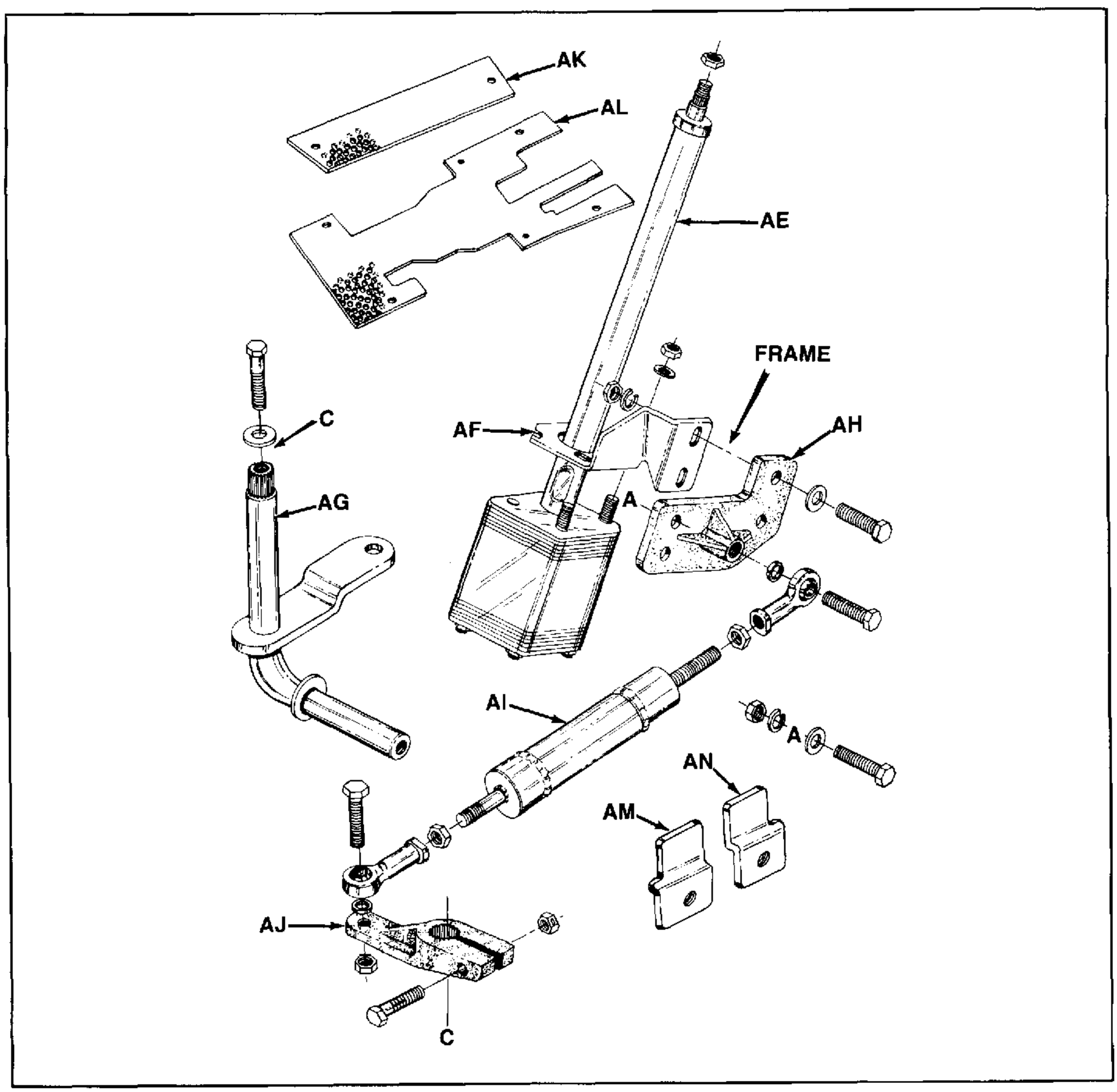

FIGURE 4.

DISASSEMBLY INSTRUCTIONS REQUIRED FOR POWER STEERING KIT:

1. Remove the two side panels from tractor, by opening the hood and removing the extension spring, flat washer and wing nut on each side. See figures 5 and 6. Retain spring and hardware for reassembly.

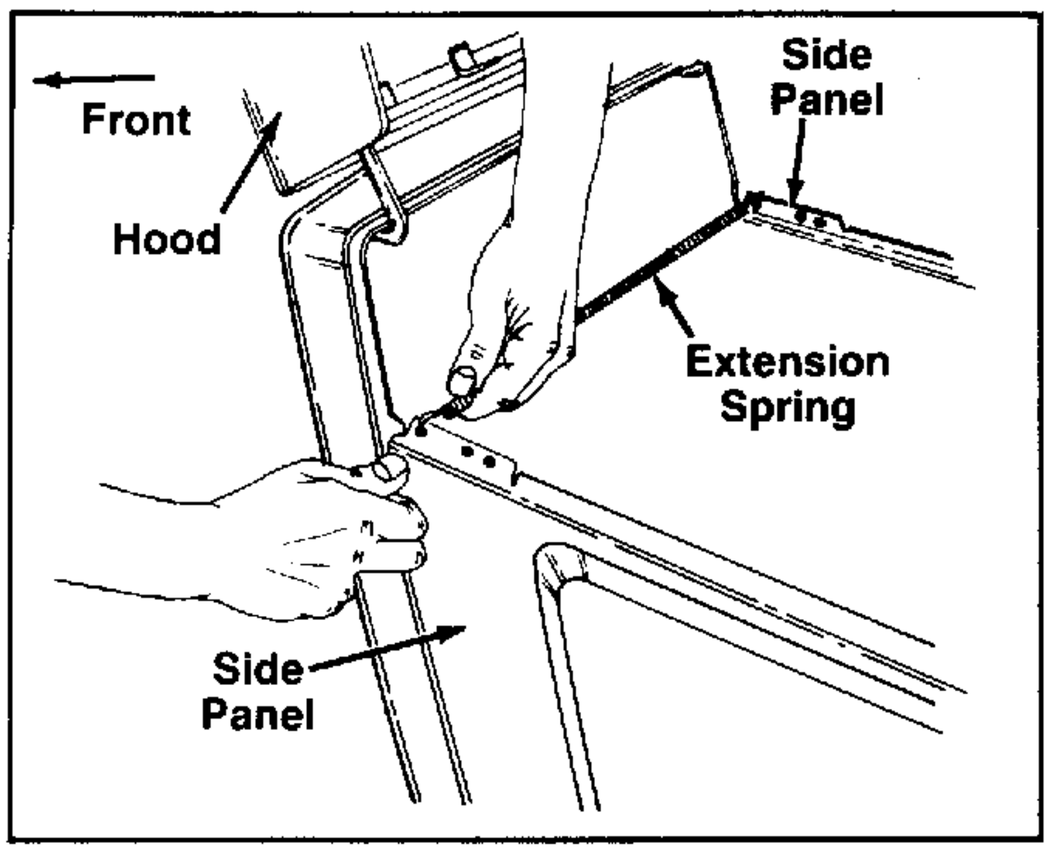

FIGURE 5.

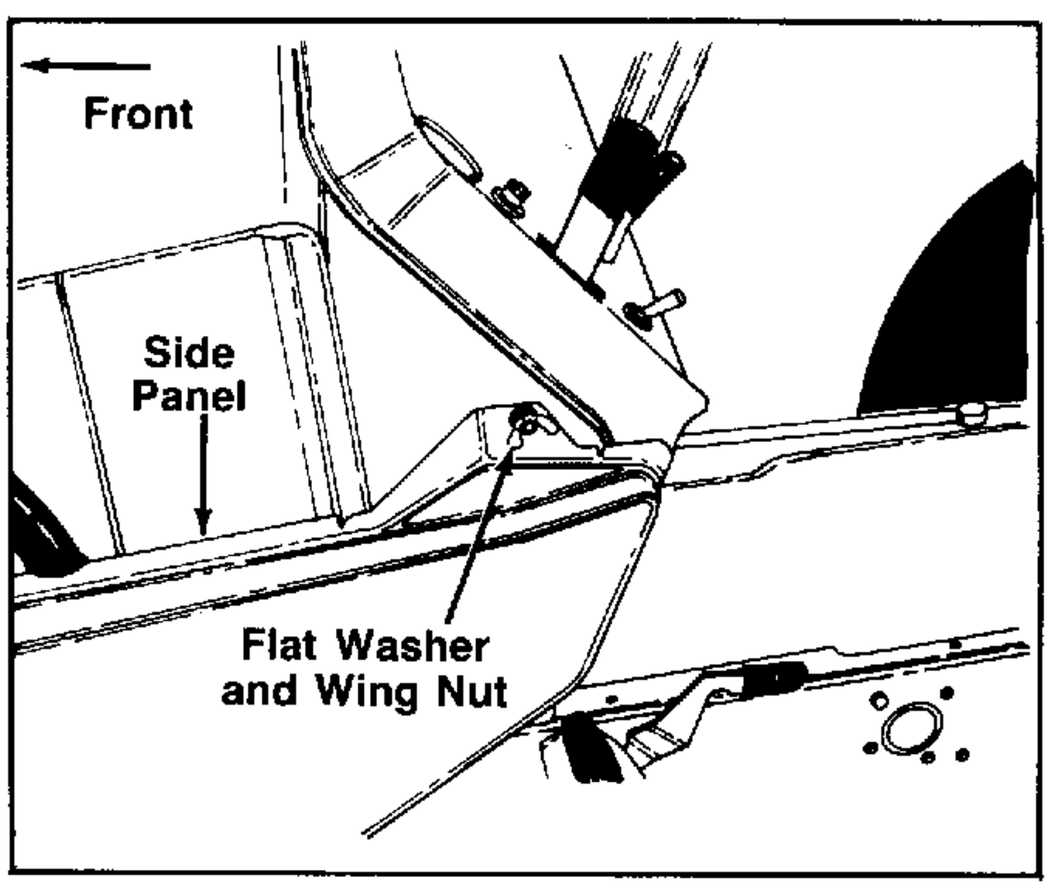

FIGURE 6.

2. Close the fuel line shut-off vlave, (turn clockwise) located on the bottom left hand side of fuel tank.

3. Disconnect the fuel line clamp at the end of hose and fuel line shut-off.

4. Remove clamp and fuel line from bottom of fuel tank and be prepared to catch any fuel in a container.

5. Remove the fuel tank, by removing two hex nuts and flat washers from fuel tank clamp. See figure 7.

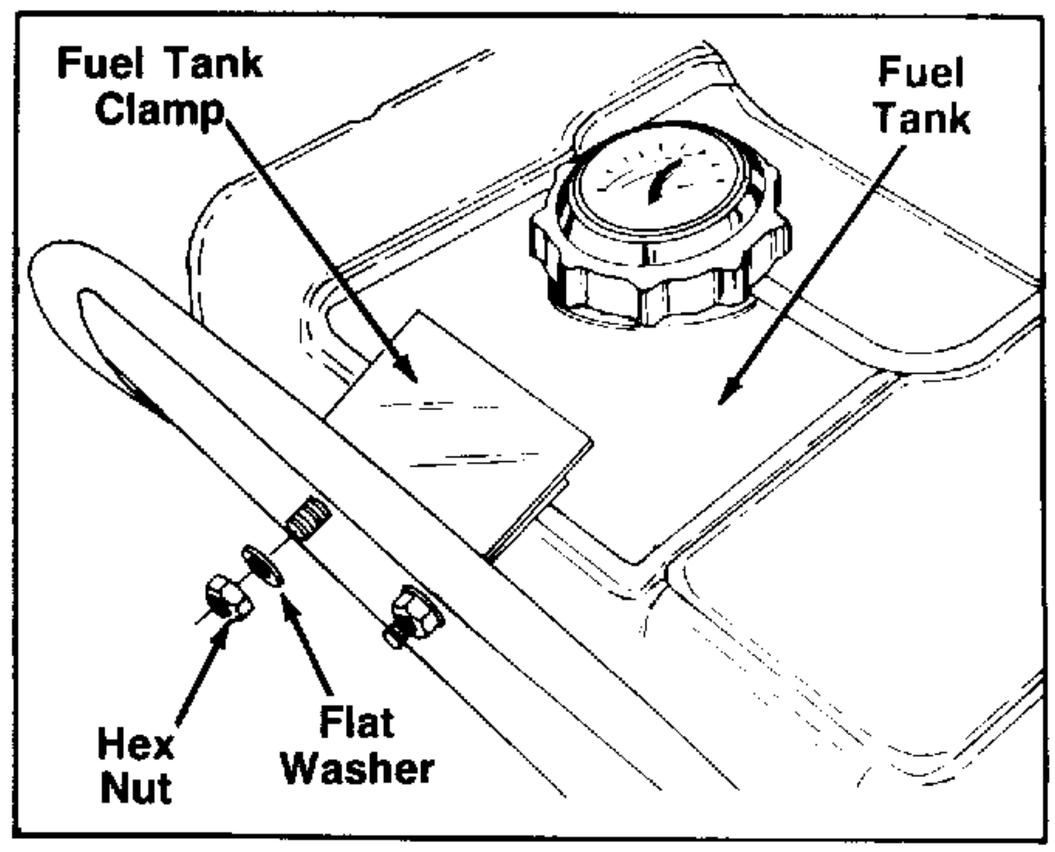

FIGURE 7.

NOTE

Tank may be wedged into fuel tank support bracket; upward pressure on bottom of tank may be required to remove tank.

6. Remove the steering wheel cap, using a screwdriver or suitable tool. See figure 8.

7. Remove the steering wheel, by removing the hex nut. Remove foam washer and rubber gasket. See figure 8. Retain all items for reassembly of steering wheel.

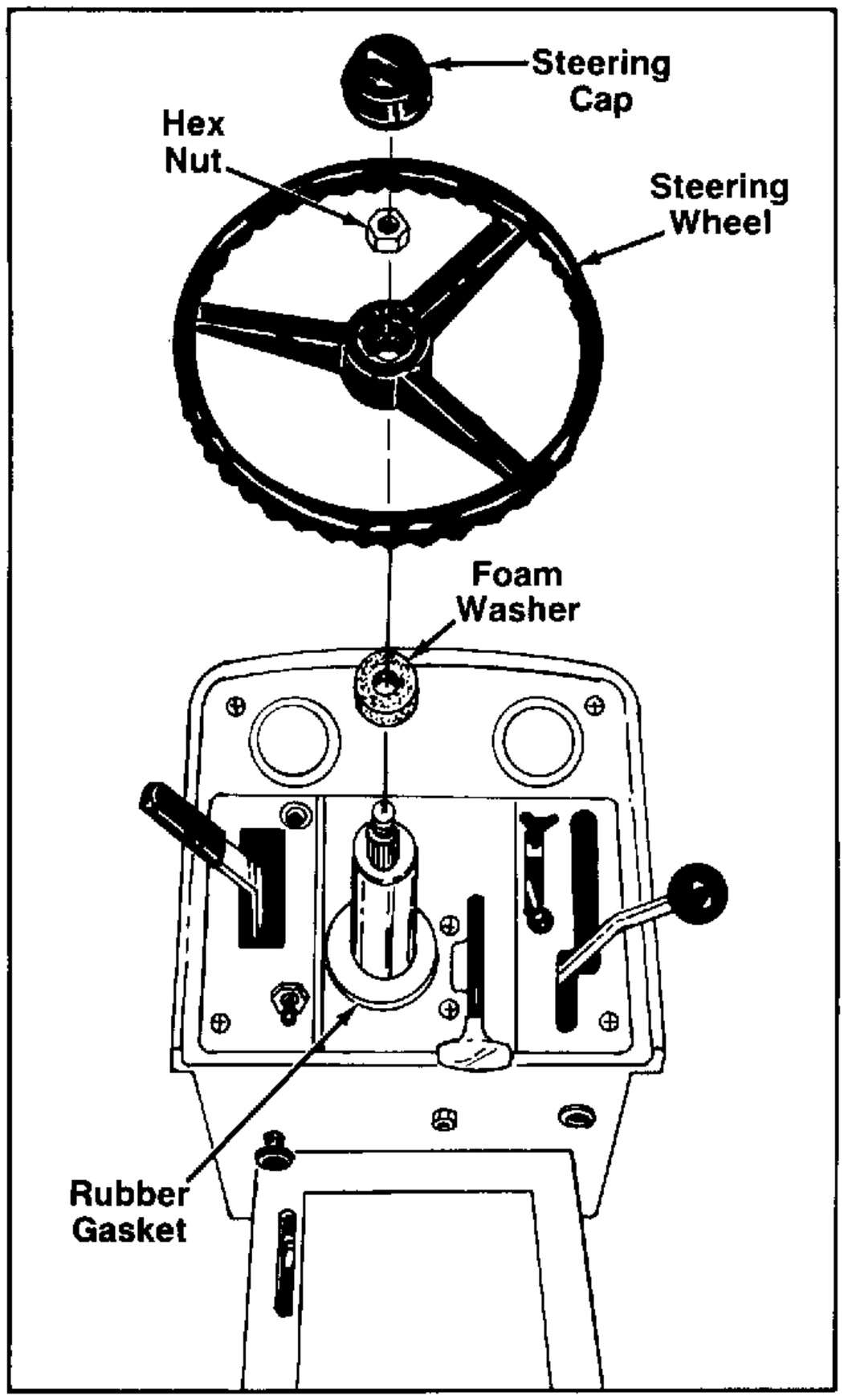

FIGURE 8.

8. Remove the four self-tapping hex bolts holding the center frame cover. See figure 9. Lift off center frame cover.

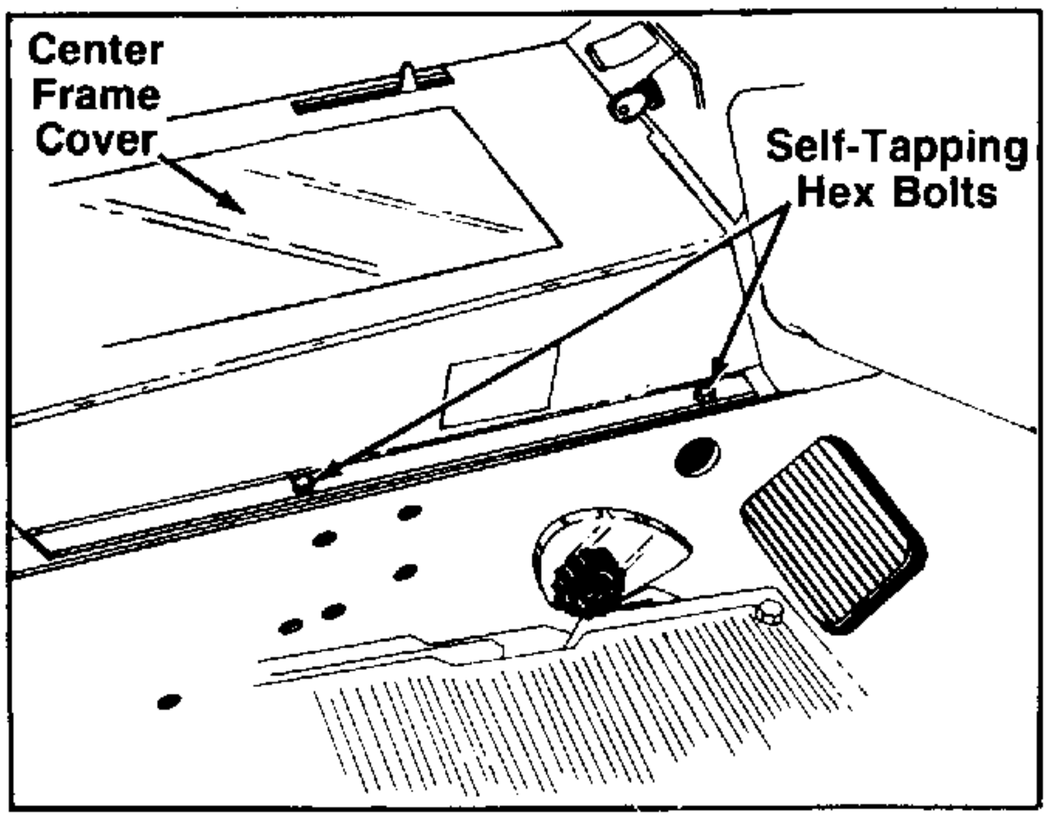

FIGURE 9.

9. Loosen clamp bracket mounted to the pedestal, by removing/loosening the hex bolt and hex nut. See figure 10.

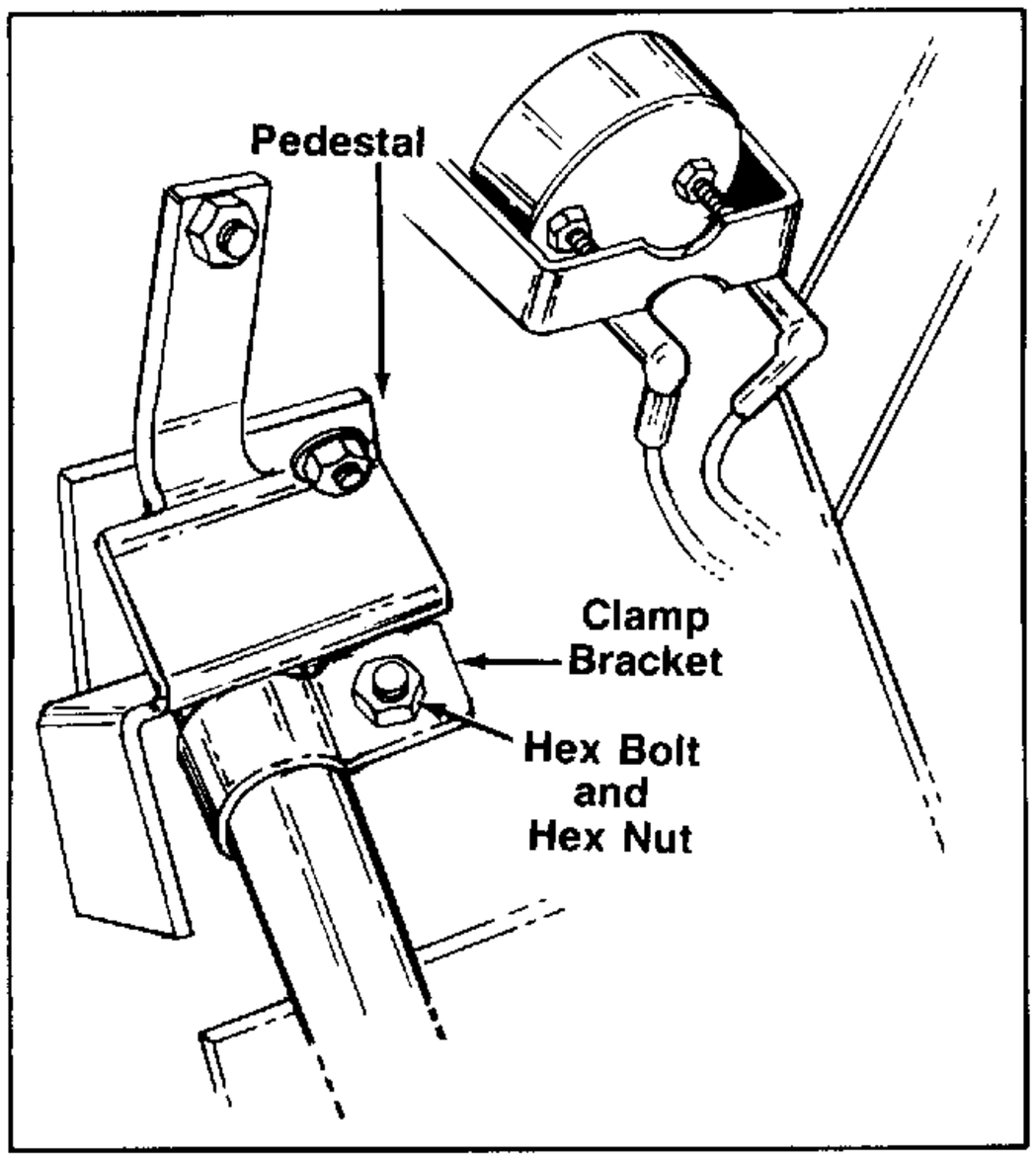

FIGURE 10.

10. Loosen the two "U"-bolts, holding the steering column. Loosen the four hex lock nuts as much as possible. **Do not remove nuts.** See figure 11.

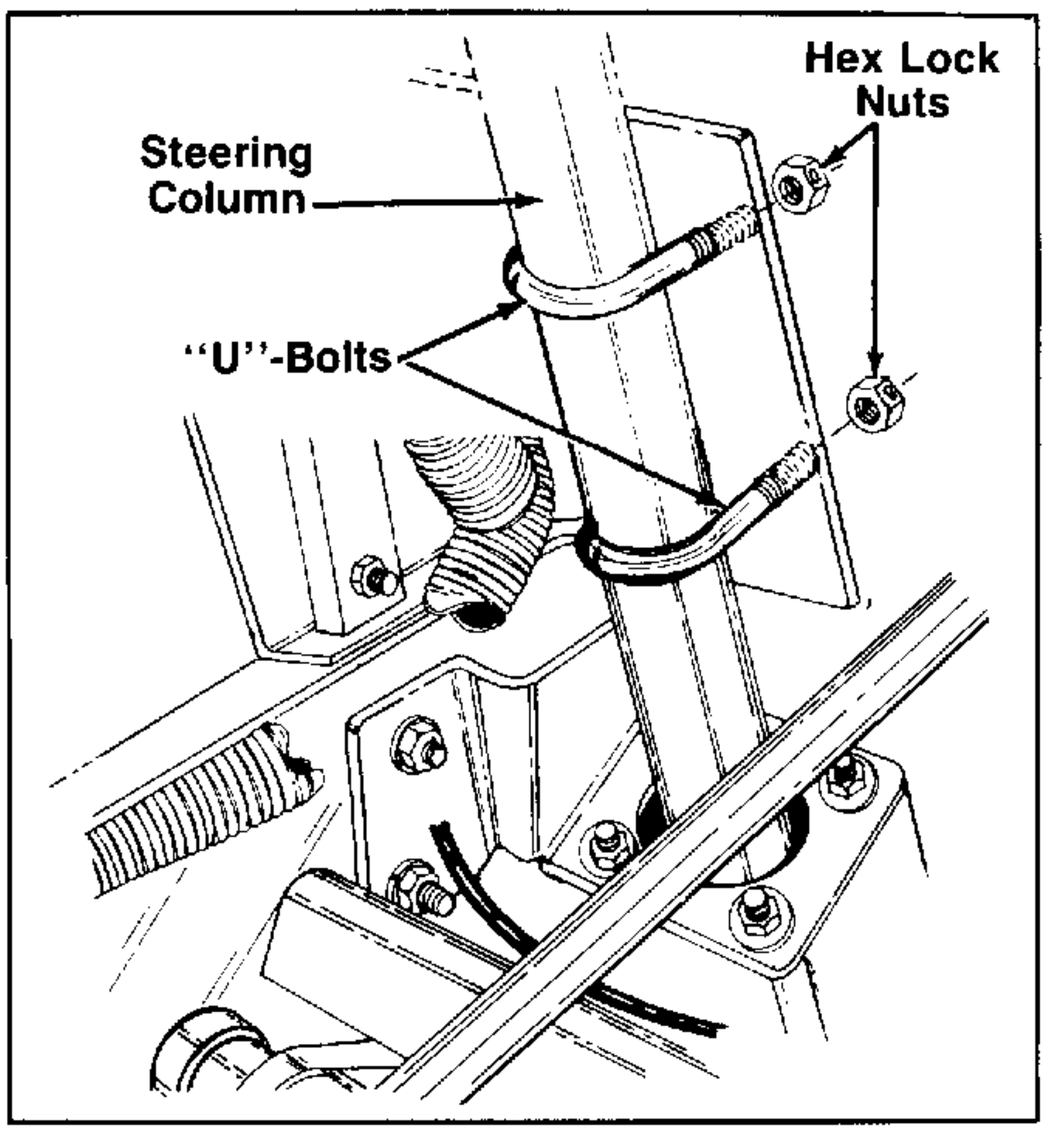

FIGURE 11.

NOTE

When the steering column is removed, the lift lever will hold the valve assembly in place.

11. Remove the drag link from bottom of steering arm on steering box and the other end from center pivot casing in front axle and discard.

12. Remove the frame screen from under tractor, which is held in place with six bolts. Retain hardware for new screens and discard old frame screen.

13. Steps to remove the steering column assembly from tractor.
    A. Loosen hardware holding support bracket to left hand side of frame.
    B. Remove the hardware securing the support bracket to the steering column.
    C. Remove the hardware you loosened in step "A" above, and discard support bracket and hardware.

CAUTION

The steering column assembly can now slide down to the floor or may be held by "U"-bolts. Care should be taken when raising the tractor.

    D. Lock dual brake pedals together and apply parking brake.
    E. Block the rear wheels to prevent tractor from rolling or sliding.
    F. Raise front of tractor two to three feet high to allow the steering column assembly to slide out of the bottom of tractor.

14. With the tractor still raised up, remove the left hand wheel and axle assembly.
    A. Remove hex bolt and flat washer holding wheel. Retain bolt, flat washer and wheel for reassembly.
    B. Remove tie rod at axle assembly, by removing cotter pin, hex castle nut and lock washer. Retain hardware for reassembly.
    C. Remove hex bolt and flat washer from top of axle assembly, allowing the axle assembly to be pulled out of pivot bar. Discard hex bolt, flat washer and left hand axle assembly.

ASSEMBLY OF POWER STEERING KIT TO TRACTOR

1. Preassemble hex bolts (D) and hex jam nuts (E) to the pivot bar adjustment plates (AM and AN) as shown in figure 12.

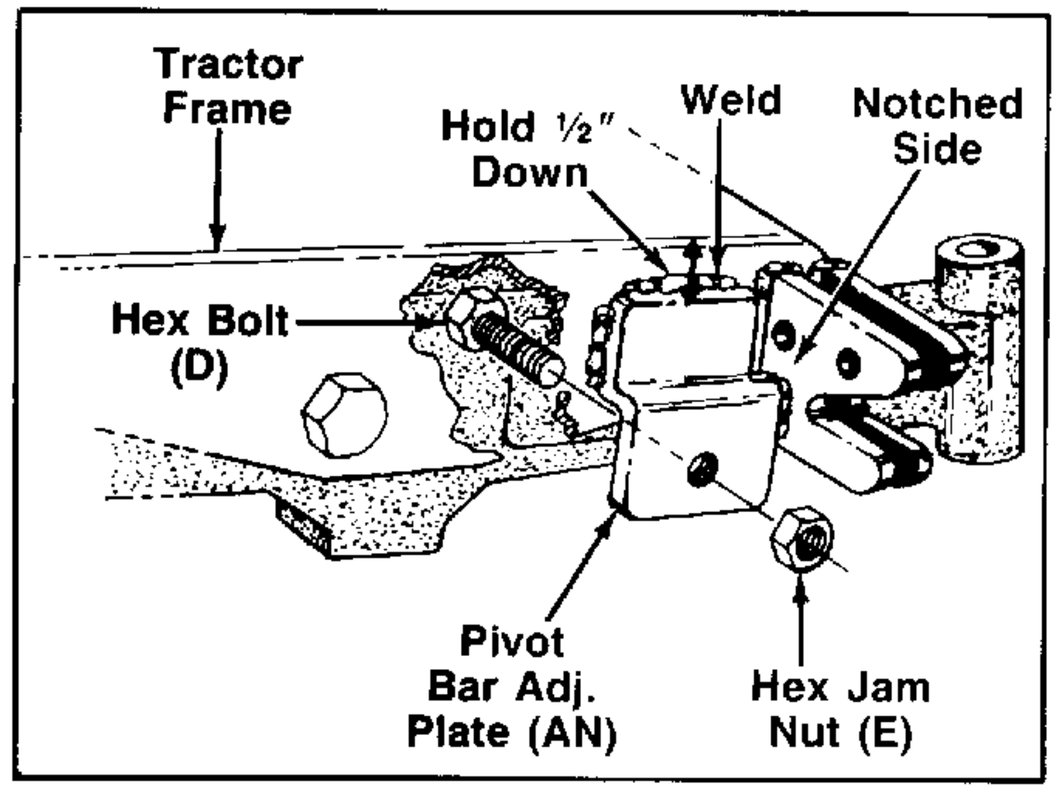

FIGURE 12.

2. With the tractor in the raised position, clamp the pivot bar adjustment plates (AM and AN) in position on frame (½" down) and weld as shown in figure 12.

3. Clean all weld splatter and burnt paint with steel (wire) brush.

4. Carefully paint the frame area and pivot bar adjustment plates.

5. Place the new steering mount bracket (AF) over steering column (AE) and position studs on steering box through slots in steering mount bracket. See figure 13.

NOTE

Notched corner on steering bracket must line up with removed stud on steering box.

Steering mount bracket must be moved all the way to the right as shown by an arrow in figure 13; for drive shaft clearance, secure bracket to steering box with three bell washers (S) and hex nuts (R). Tighten securely.

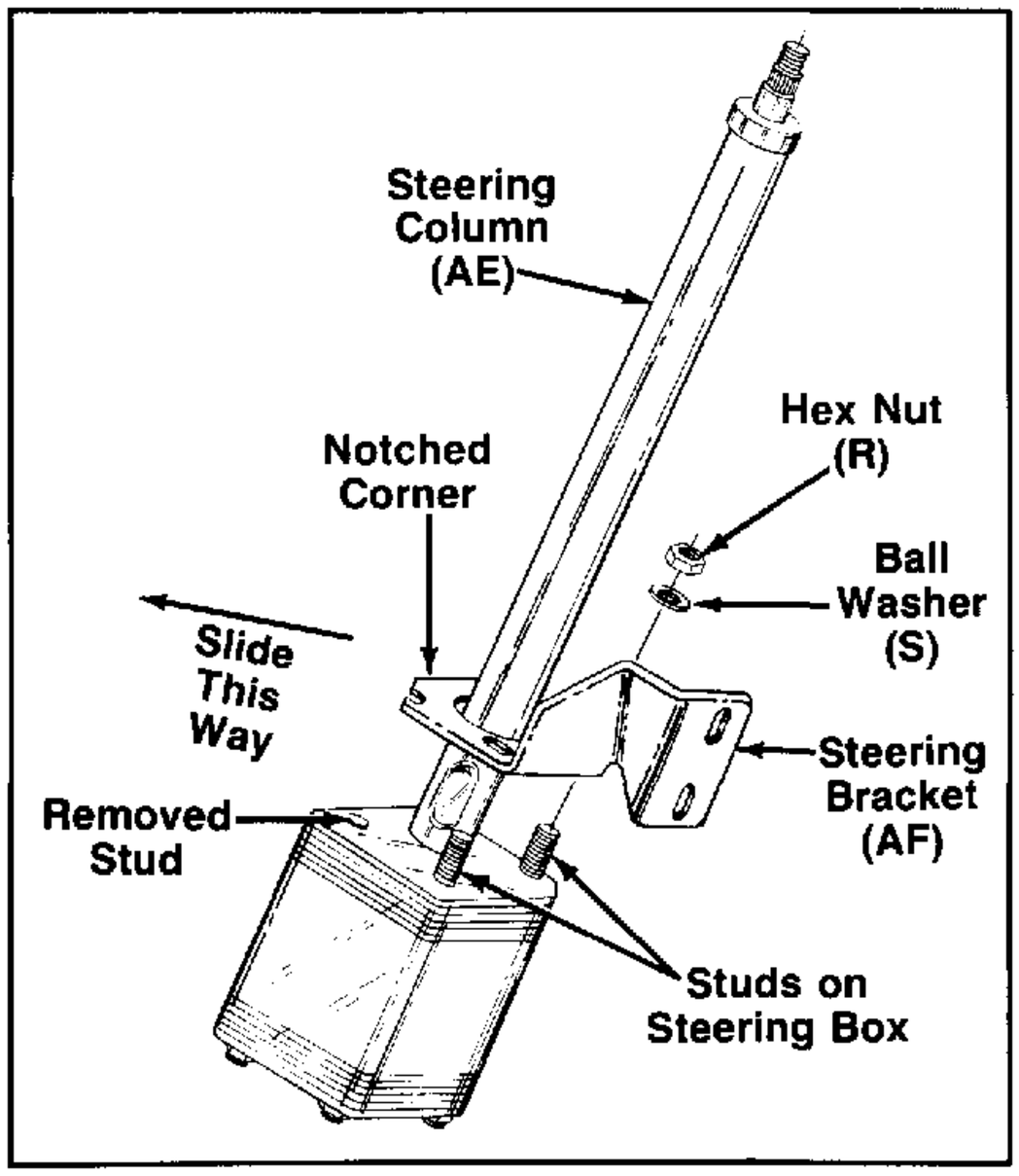

FIGURE 13.

6. Remove the five plastic protective caps (used for shipping only) from the bottom of the steering column assembly. See figure 14.

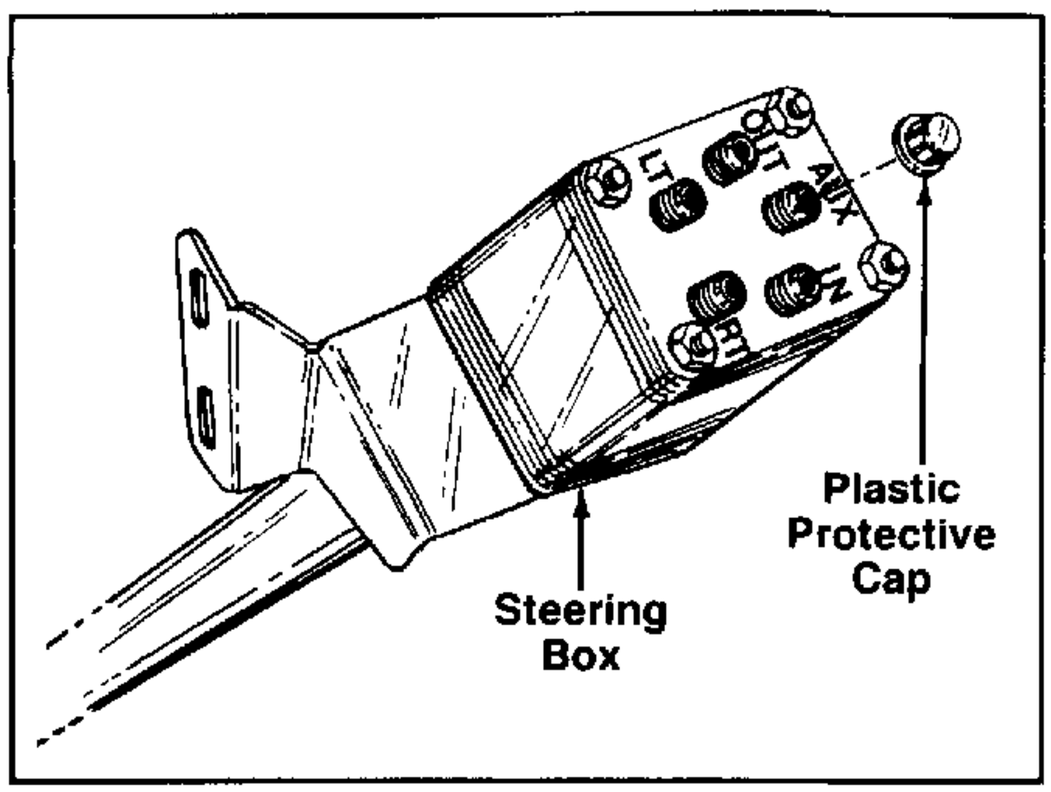

FIGURE 14.

7. Assemble two 90° tube elbows male/female (W) to the ports marked "IN" and "OUT" on bottom of steering column assembly as shown in figure

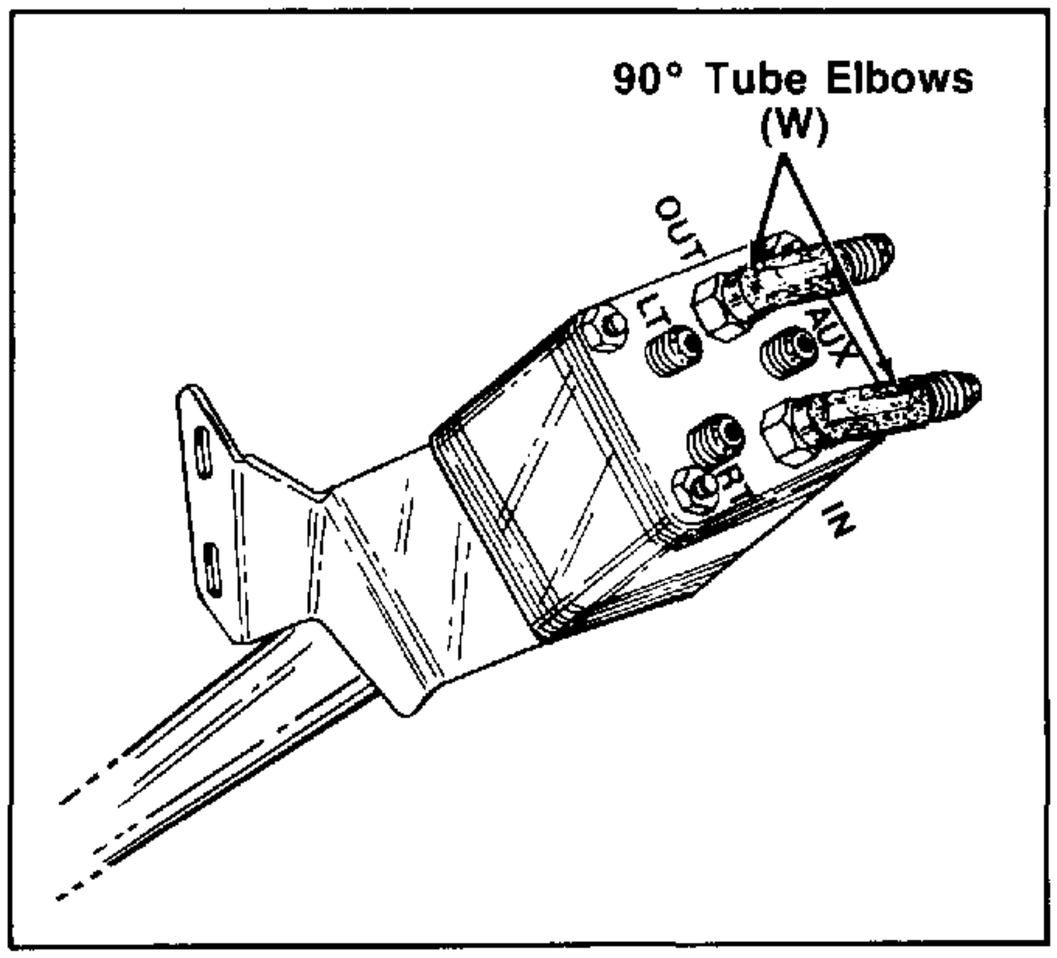

FIGURE 15.

8. Assemble the cylinder mounting bracket (AH) to the left hand side of tractor frame using two front holes, with two hex bolts (C), flat washers (K), lock washers (L) and hex center lock nuts (H) loosely at this time. See figure 16.

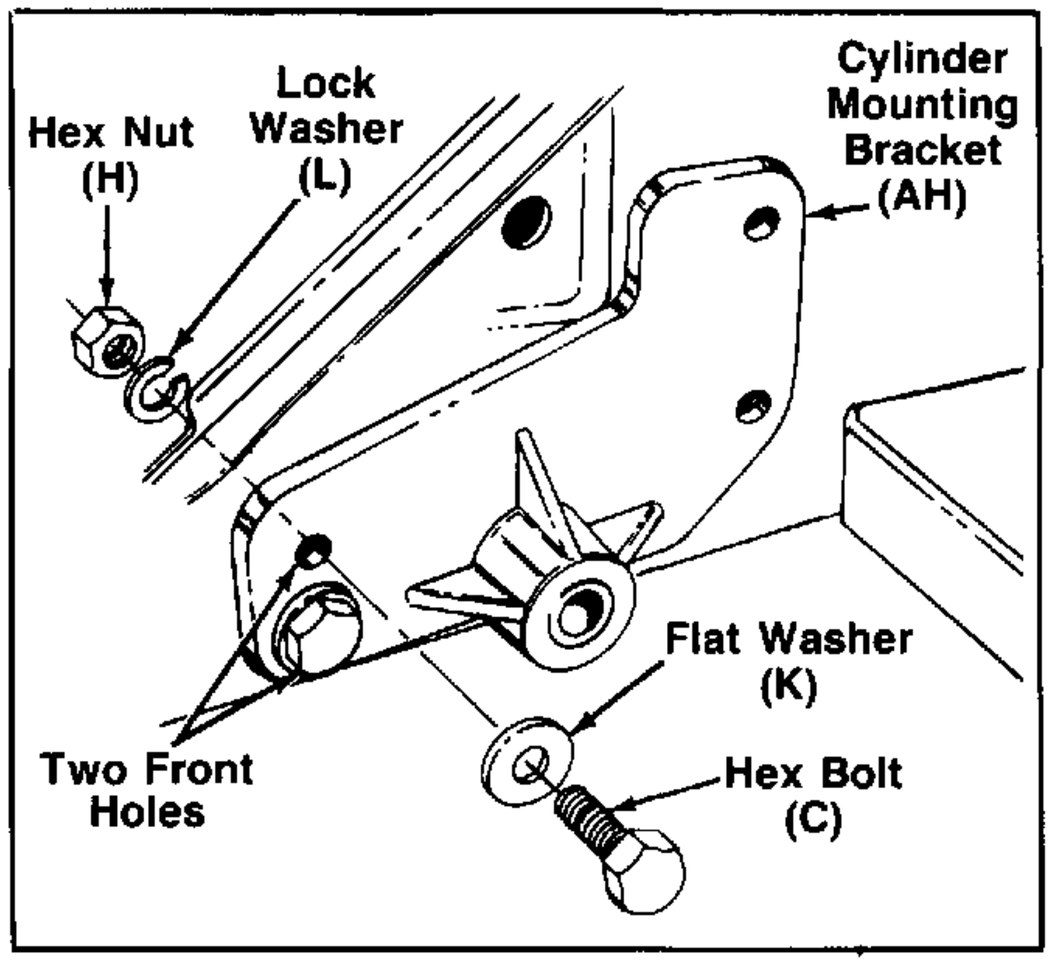

FIGURE 16.

NOTE

Upon sliding the new steering column assembly up into the tractor you will need someone to hold it in position while keeping the "U"-bolts up, allowing the steering column to go through both "U"-bolts and the clamp

9. Place the steering column assembly with installed steering mount bracket (bracket to the left side) up into the tractor.
   A. Line up the two holes in steering mount bracket with frame of tractor (left hand side) and two rear holes in cylinder mounting bracket.
   B. Secure the cylinder mounting bracket to tractor frame with two hex bolts (B), flat washers (J), lock washers (M) and hex center lock nuts (G). See figure 17. Tighten securely.

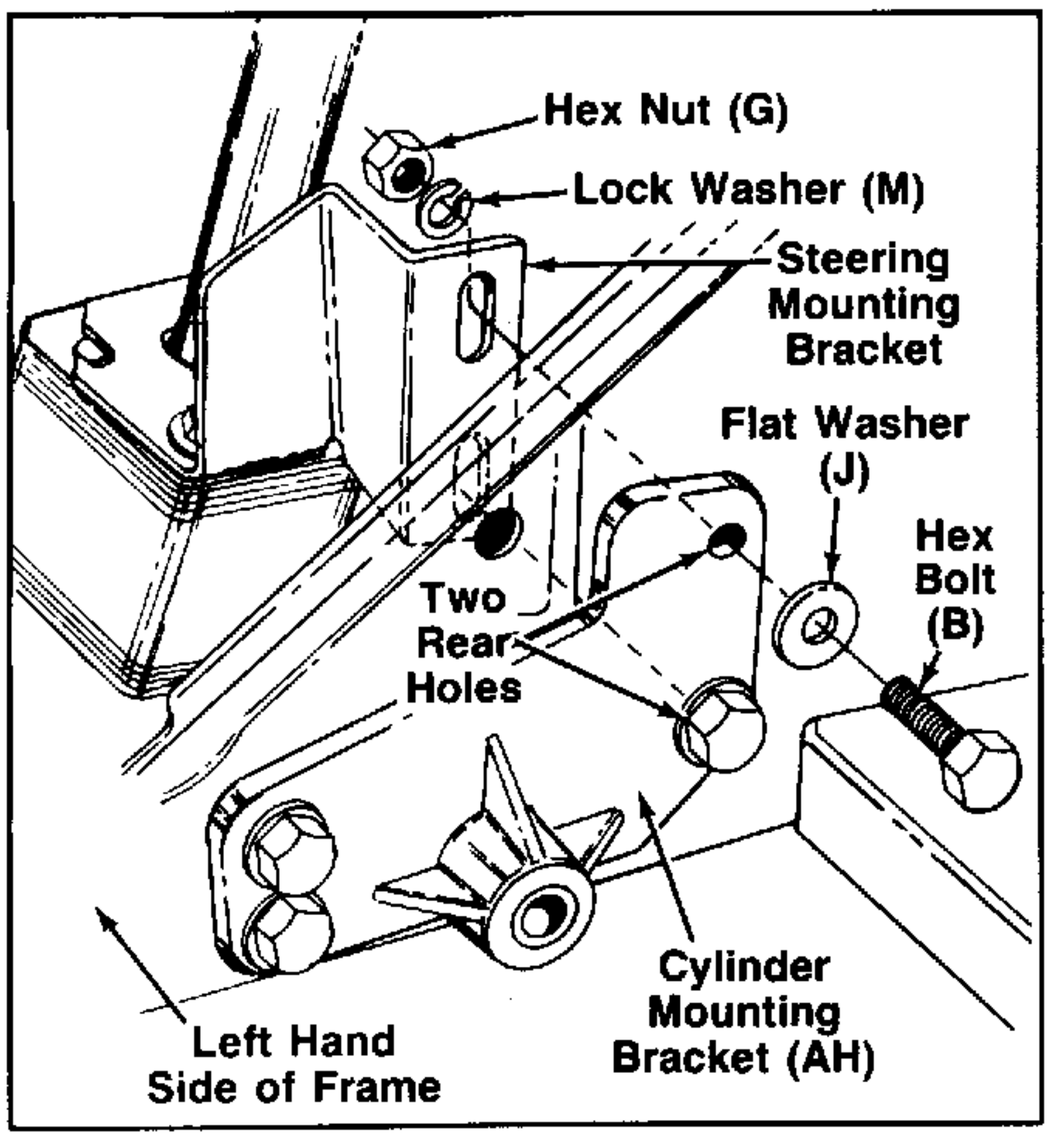

FIGURE 17.

   C. Now tighten bolts and nuts on front of cylinder mounting bracket to frame (left loose in step 8) securely.
   D. Reinstall or retighten hardware on clamp bracket mounted on pedestal (left loose or removed in disassembly section, step 9, figure 10) securely.
   E. Now tighten four lock nuts on two "U"-bolts to secure the valve plate assembly to the steering column (left loose in disassembly section, step 10, figure 11).

NOTE

"U"-bolts may have to be readjusted if your lift levers do not have full movement (bottoming out in slot).

10. Installation of hydraulic lines. **(For reference see figure 25.)**
   A. Disconnect tubing at 90° elbow on right hand side of valve. Remove 90° elbow from valve and discard.
   B. Install the "T"-Fitting (U) to the right hand side of valve with the "O"-Ring side of "T"-Fitting into valve body where 90° elbow was removed in step 10A. See figure 18.

NOTE

"T"-Fitting must be installed so bottom of "T"-Fitting is parallel with the steering column. Do not tighten. Back up nut on "T"-Fitting at this time. See figure 18.

   C. Reassemble the tube (disconnected in step "A" below) to the bottom of "T"-Fitting. See figure 19.

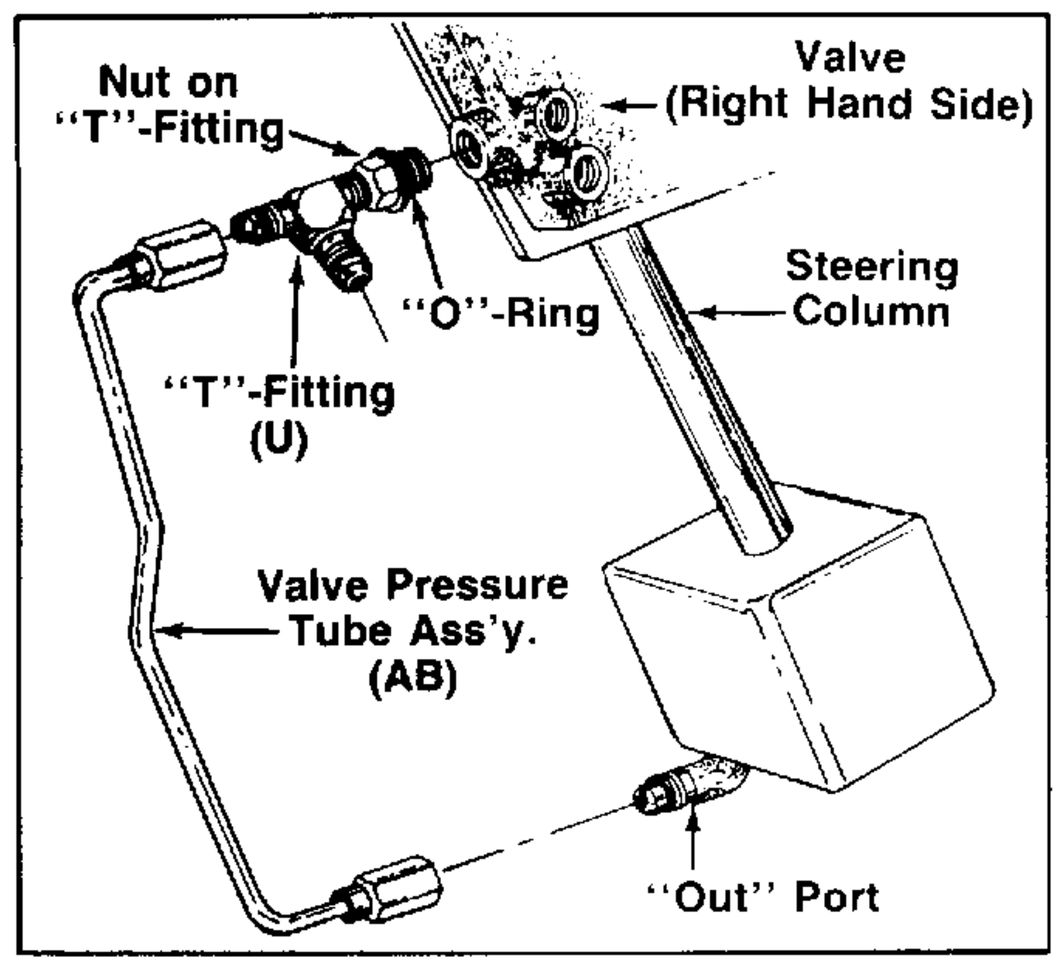

FIGURE 18.

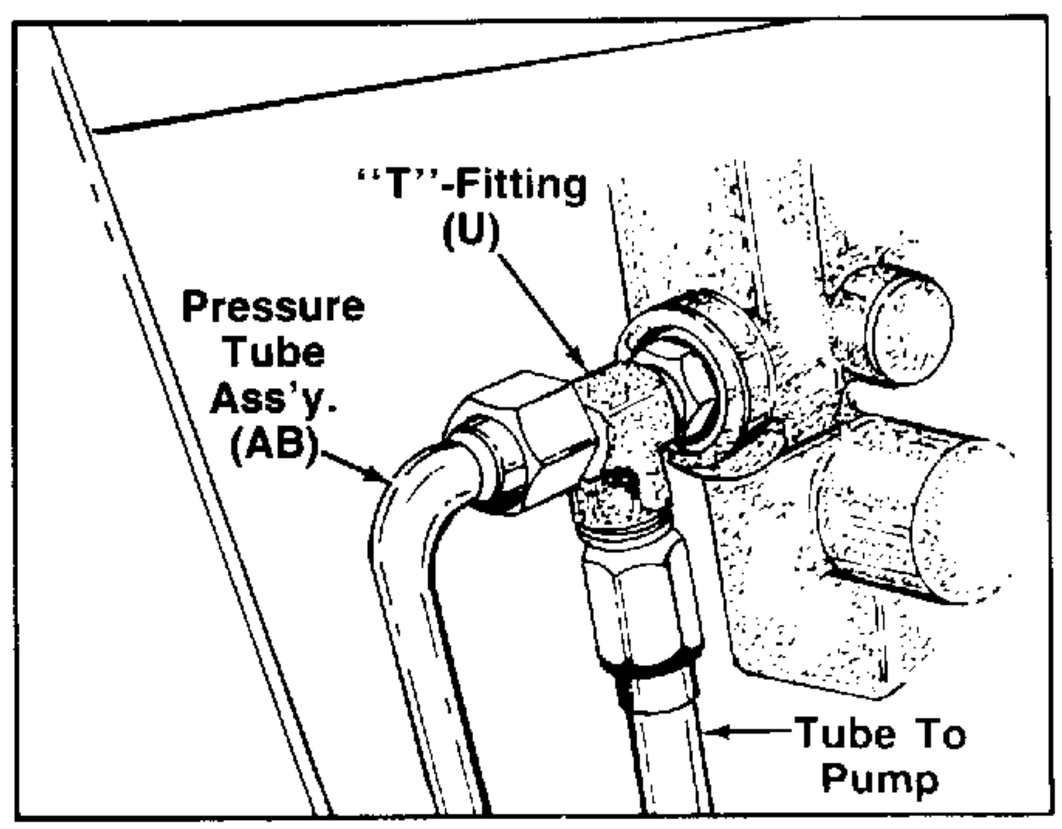

FIGURE 19.

11. Assemble valve pressure tube assembly (AB) to the other end of "T"-Fitting loosely and connect the other end to 90° tube elbow on the "Out" port on the bottom of steering column. Tighten securely at this time. See figures 18 and 19.
12. Remove the tube assembly from the right hand side of pump (marked "Out" port), then disconnect the other end of tube at left hand side of valve. **Do not remove 90° elbow.** See figure 20.

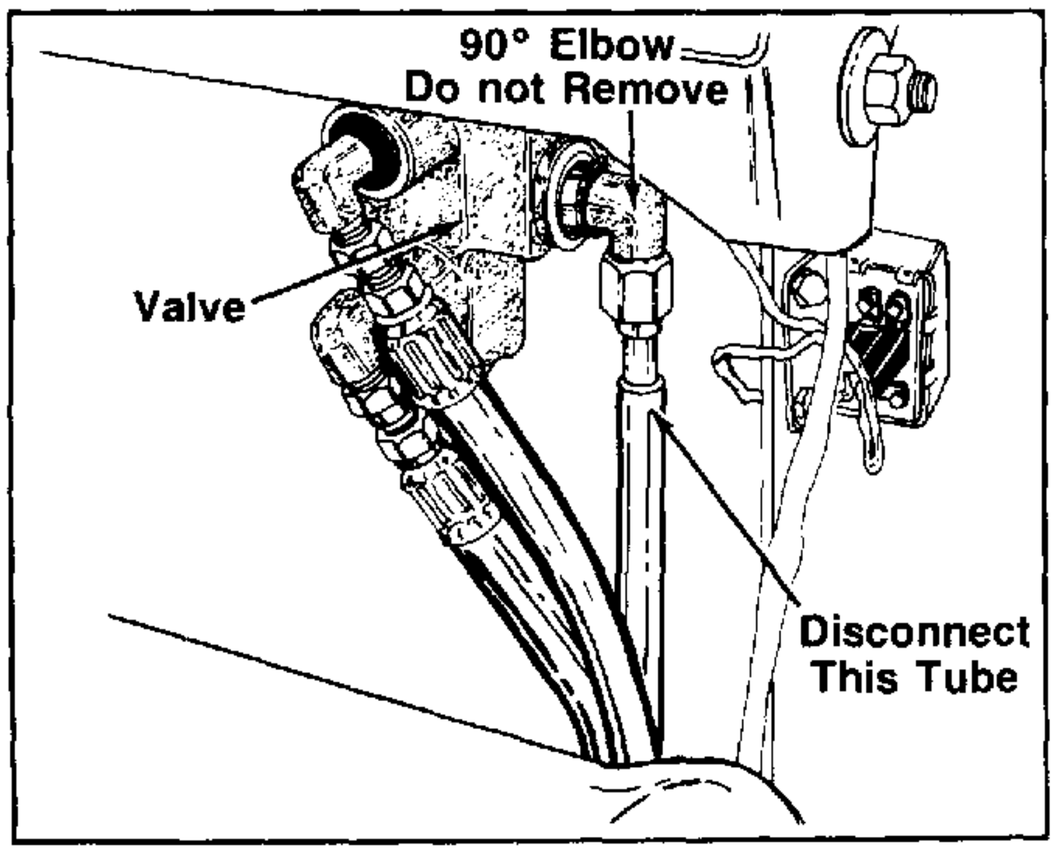

FIGURE 20.

13. Assemble the valve pressure tube assembly (Z) to the 90° tube elbow located on left hand side of valve. **Do not tighten at this time.** See figure 21. Assemble the other end of the valve tube assembly to the "Aux." port on bottom of steering column and tighten securely. See figure 21.

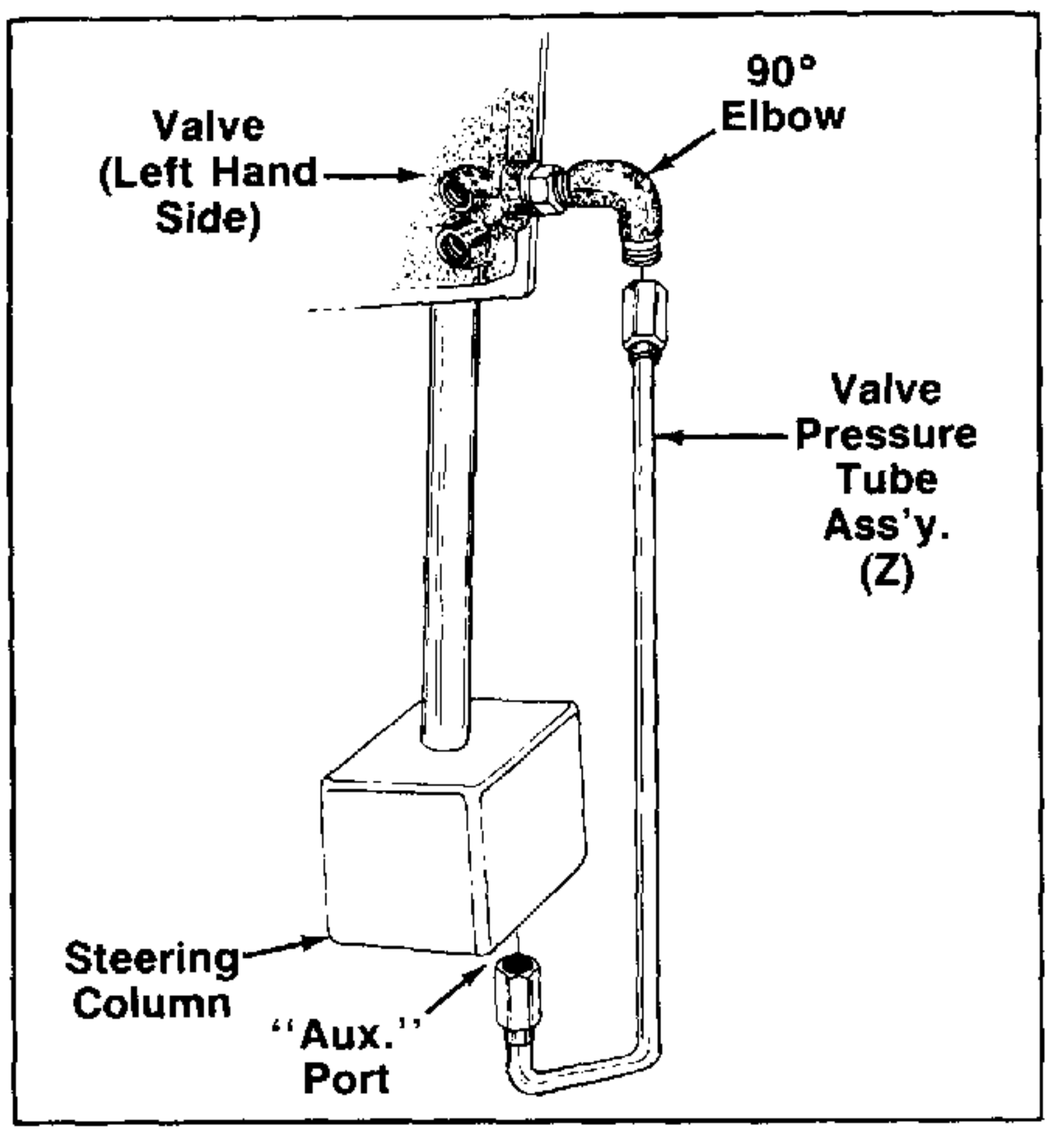

FIGURE 21.

14. Assemble the union fitting (V) to pump pressure tube assembly (AA) as shown in figure 22, and tighten.

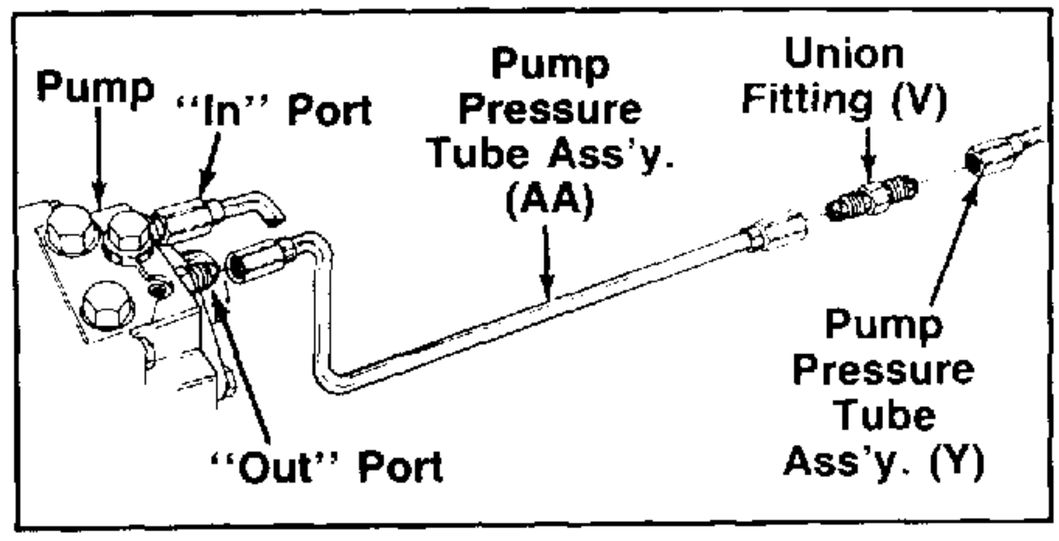

FIGURE 22.

15. Assemble the other end of the pump pressure tube assembly (AA) to pump ("Out" port) loosely. See figure 22.
16. Assemble the (short end) pump pressure tube assembly (Y) to the 90° elbow on the "In" port on the bottom of the steering column loosely. **Do not tighten at this time.** See figure 23.

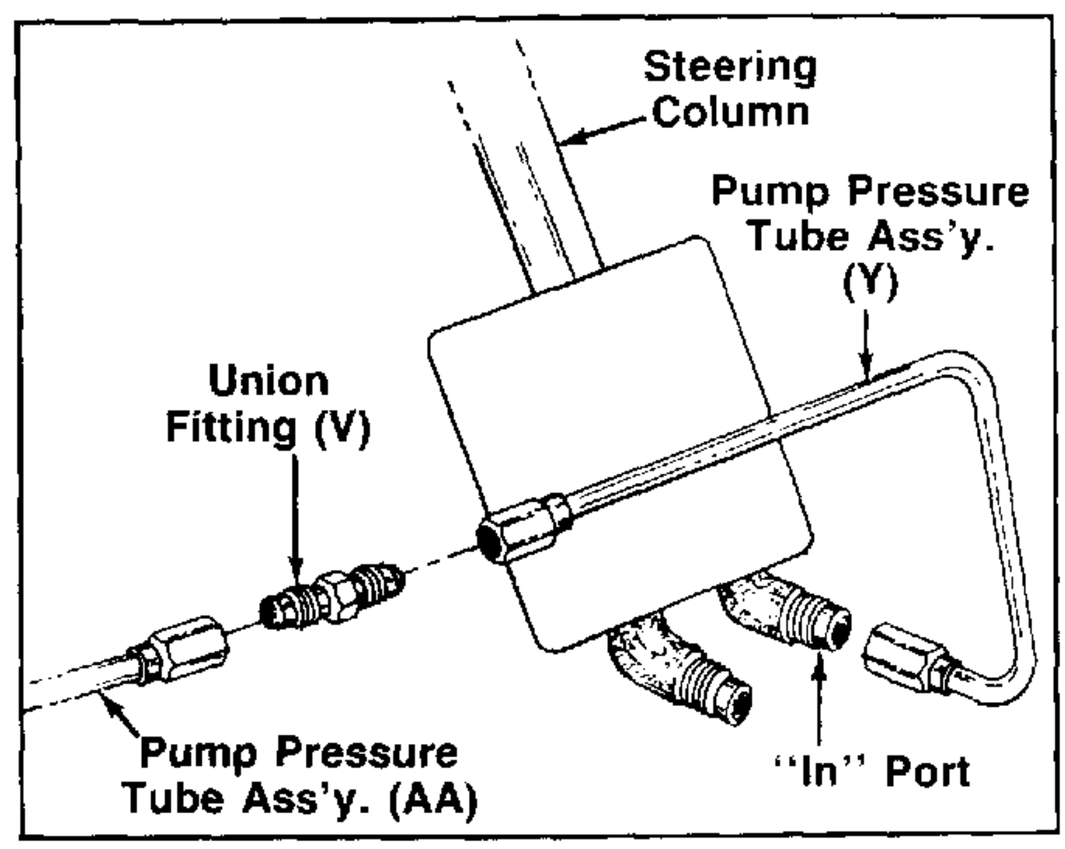

FIGURE 23.

17. Assemble the other end of pump pressure tube assembly (Y) to the union fitting (V) and tighten. See figure 23.

NOTE

The fitting you left loose at (steps 15 and 16) pump and steering was to allow you to tighten the union.

18. Now tighten the pump pressure tube assembly (Y) to the 90° fitting on steering column and the pump pressure tube assembly (AA) to the pump ("Out" port).

NOTE

Now tighten the backup nut on the "T"-Fitting which was left loose.

19. Assemble the 90° end of steering hose (AC) (10.5 inches long) to the "RT" port on steering column. Tighten securely at this time. See figure 24.
20. Assemble the 90° end of steering hose (AD) (8.9 inches long) to the "LT" port on steering column. Tighten securely at this time. See figure 24.

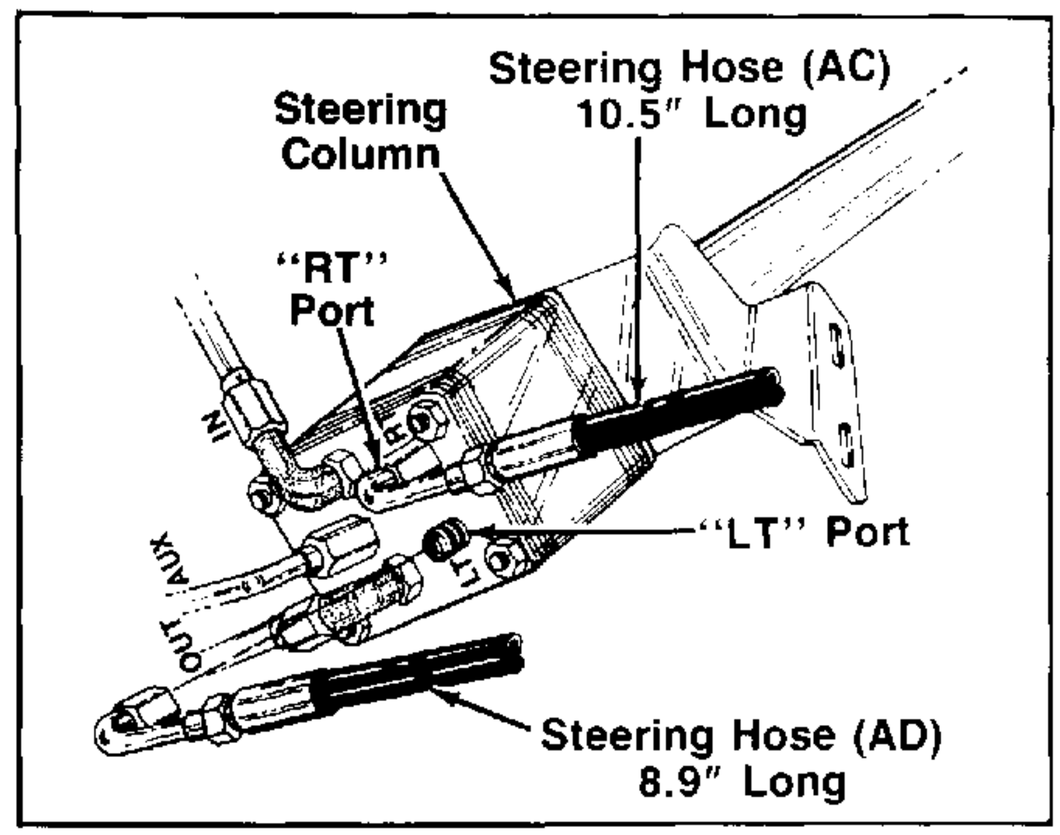

FIGURE 24.

Diagram of New Hydraulic Lines:

NOTE

This diagram is only a reference. The tube assemblies are not shown with the correct bends.

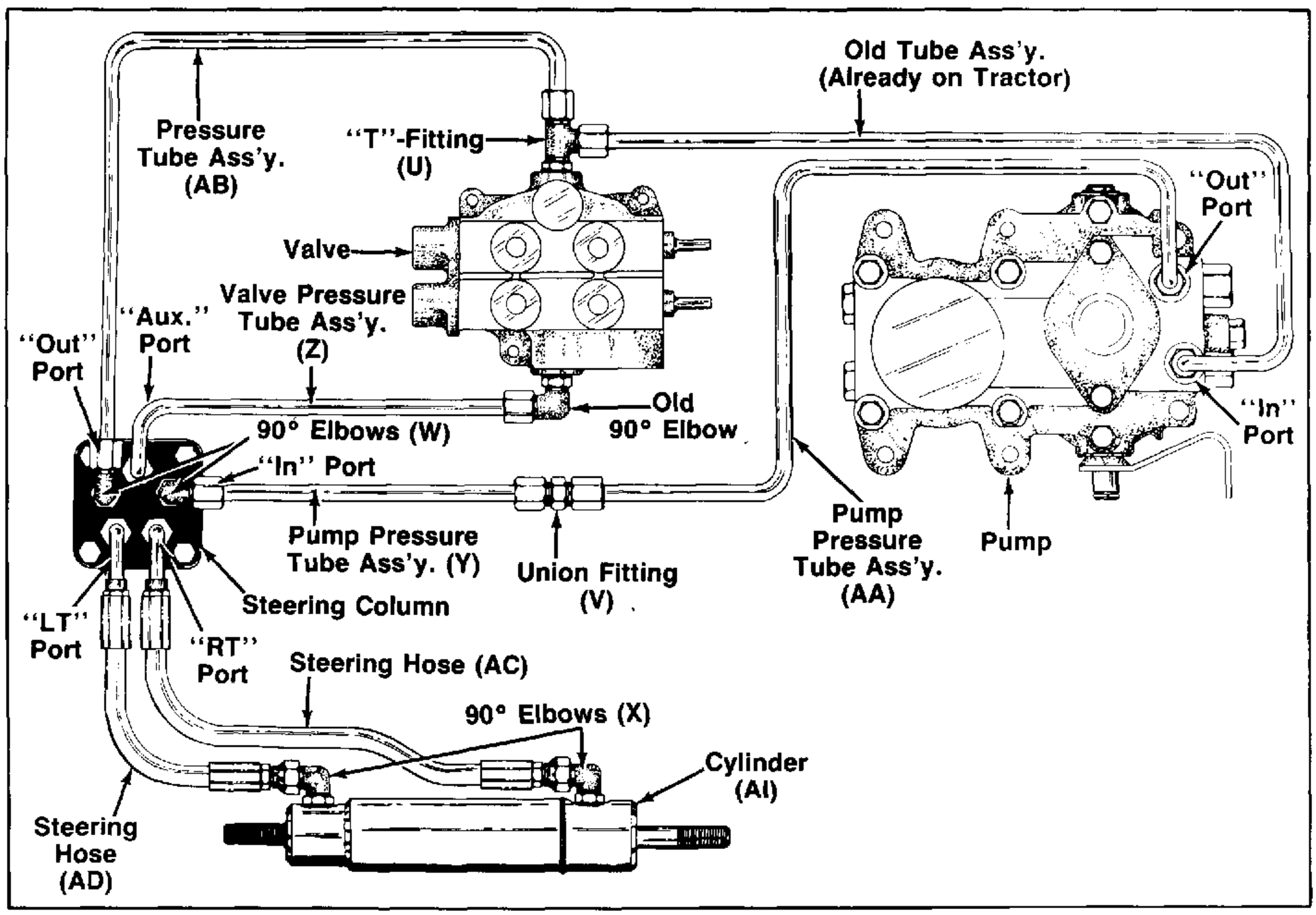

FIGURE 25.

21. Lower the tractor down towards the floor, but keep high enough to allow assembly of axle assembly (AG) and wheel.
22. Assemble the new left hand axle assembly (AG) through the pivot bar.
23. Assemble the wheel to the axle with flat washer and hex bolt, removed in disassembly section, step 14A. Tighten securely.
24. Assemble the tie rod to axle assembly with lock washer, hex castle nut and cotter pin, removed in disassembly section, step 14B. Tighten securely and install cotter pin. See figure 26.

NOTE

Figures 26 and 27 are shown without wheel for clarity.

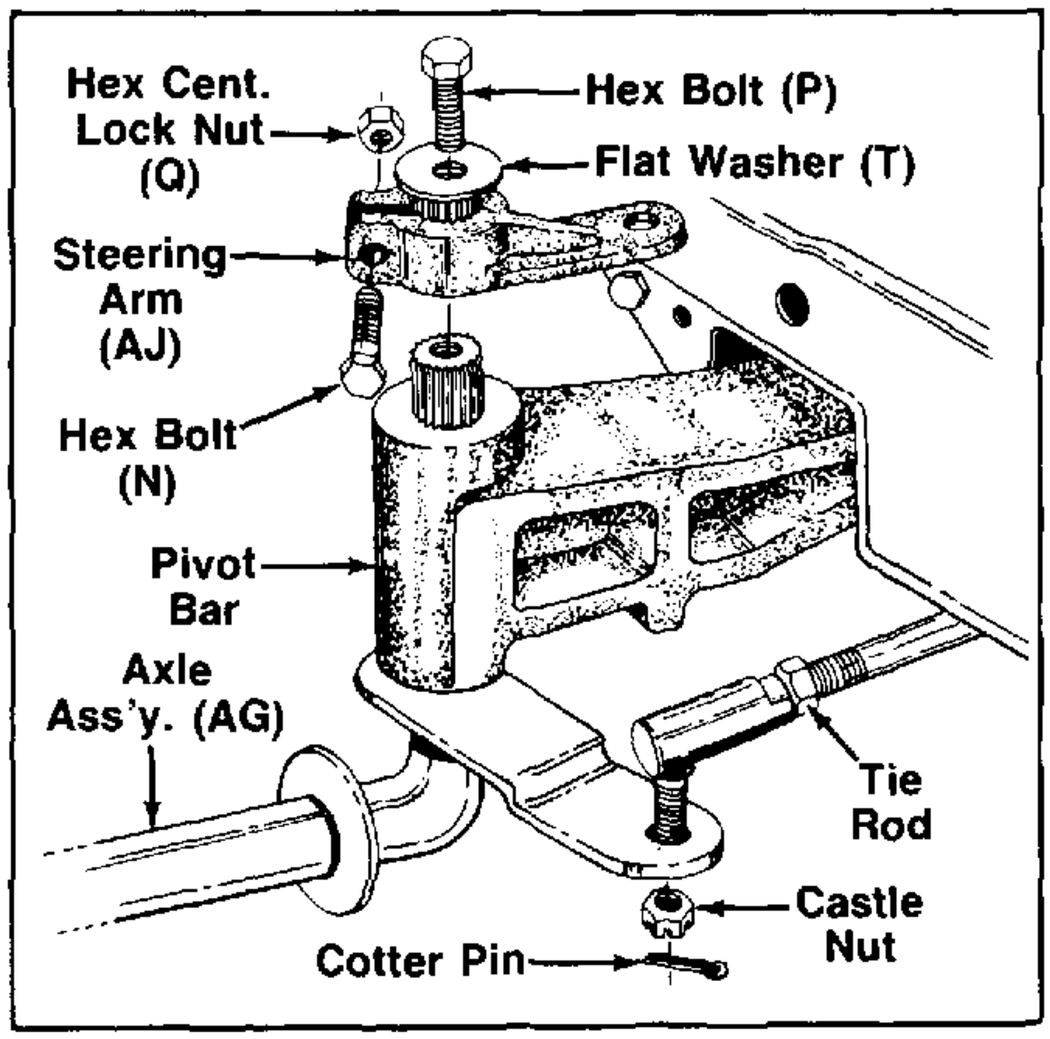

FIGURE 26.

25. Lower tractor to floor at this time.
26. Grease the serrated end of axle assembly with 251 HEP grease or equivalant.
27. Assemble the steering arm (AJ) over serrated end of axle. **Note: The steering arm must be straight *in line with the axle and 90° from the wheel.*** See figures 27 and 28. With a large screwdriver pry slot in open end of steering arm (AJ) to allow serrations in steering arm to be started over serrated axle end. Tap on steering arm with a rubber mallet, while applying pressure with the screwdriver, until steering arm is down against the pivot bar. See figure 27.

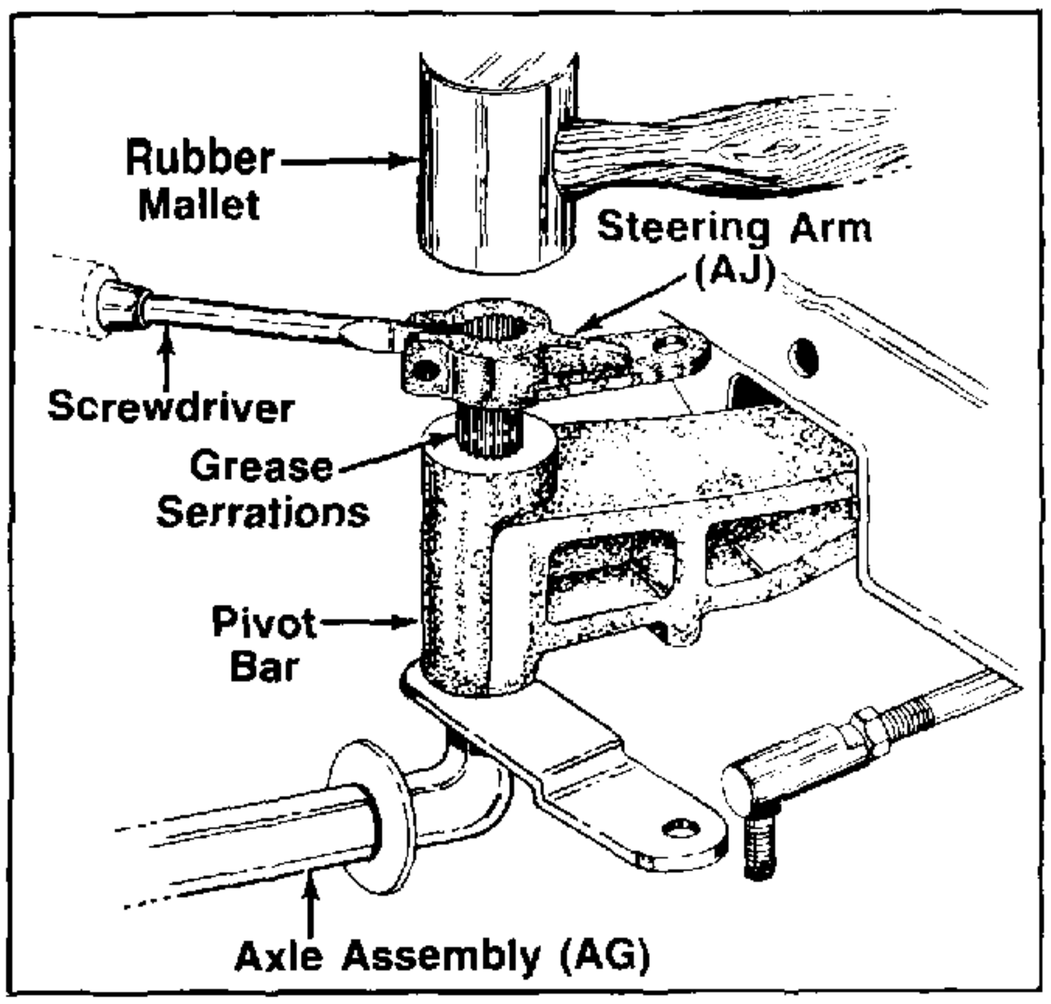

FIGURE 27.

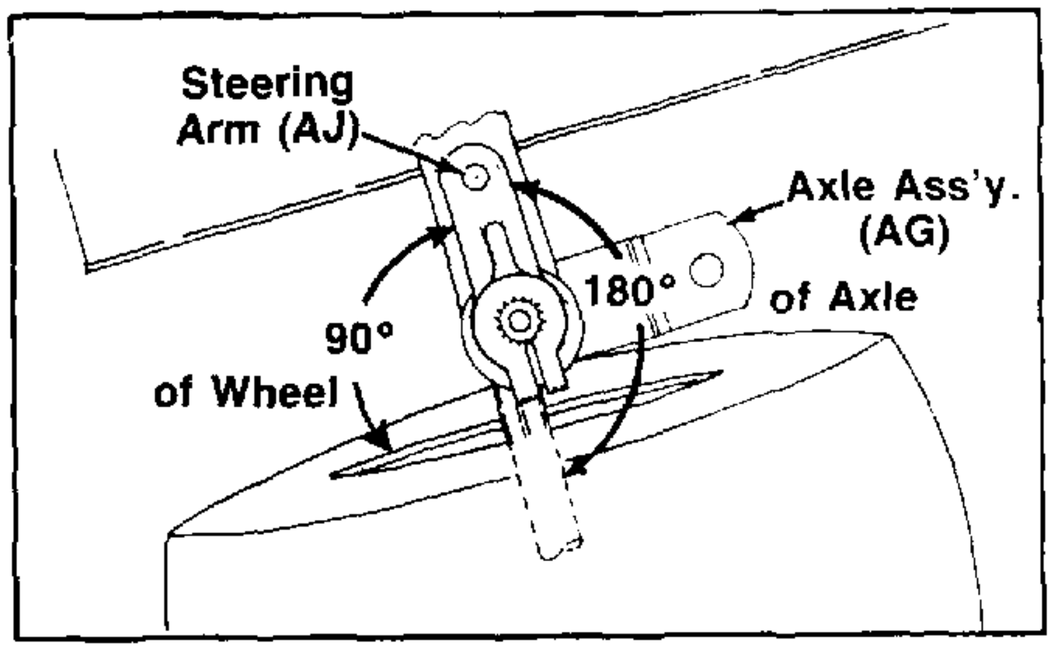

FIGURE 28.

28. Install hex bolt (N) through steering arm (AJ) and secure with hex center lock nut (Q). See figure 26.
29. Secure the axle assembly to the pivot bar with hex bolt (P) and flat washer (T). See figure 26.
30. Assemble two 90° tube elbows (male/female) fittings (X) to the power steering cylinder (AI) in the positions shown in figure 29.

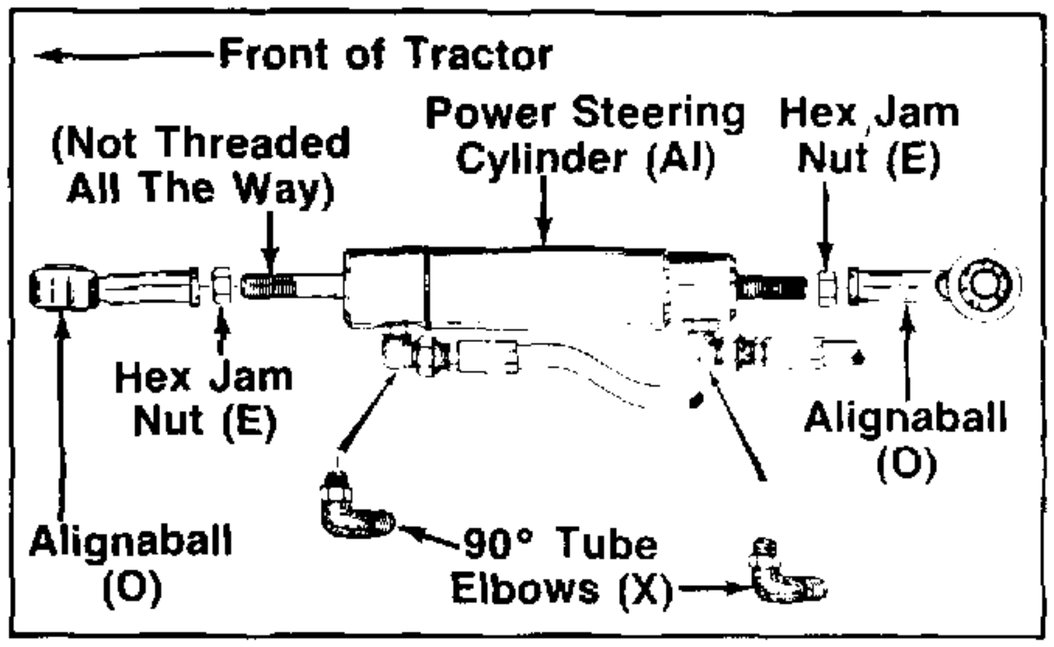

FIGURE 29.

31. Thread the two hex jam nuts (E), onto the steering cylinder ends. Thread the alignaball end (O) onto the rear end of the steering cylinder with 5/8 inch of thread into the alignaball in the position shown in figure 29. Tighten the hex jam nut to the alignaball.

32. Thread the remaining alignaball end (O) to the front end of steering cylinder. Do not tighten the hex jam nut at this time.

33. Turn the front wheels fully towards the right until the right hand steering knuckle contacts the stop on the front axle.

34. Assemble the rear end of the steering cylinder to the cylinder mounting bracket with the cylinder mounting bolt (A) and flat washer (I) as shown in figure 30.

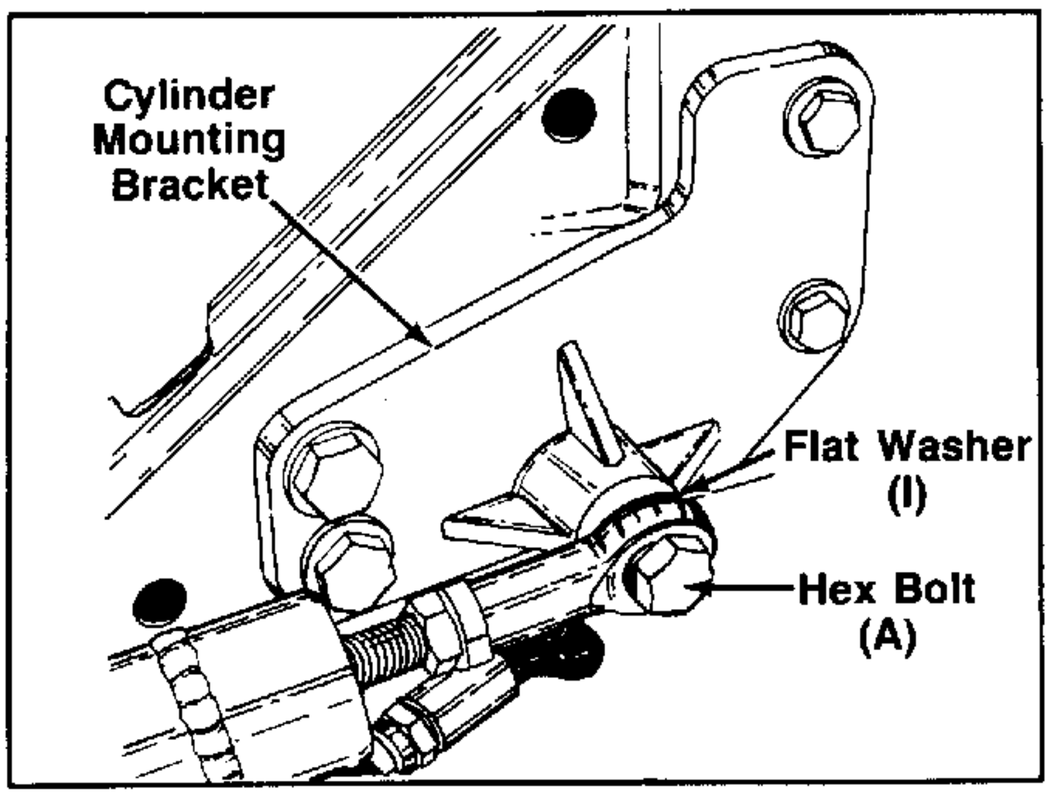

FIGURE 30.

35. Line up the front steering cylinder alignaball end with the front steering arm; thread the front alignaball in or out as required. Fasten the alignaball to the front steering arm, using hex bolt (A), flat washer (I) and hex nut (F). Tighten the hex jam nut to the front alignaball. See figure 31.

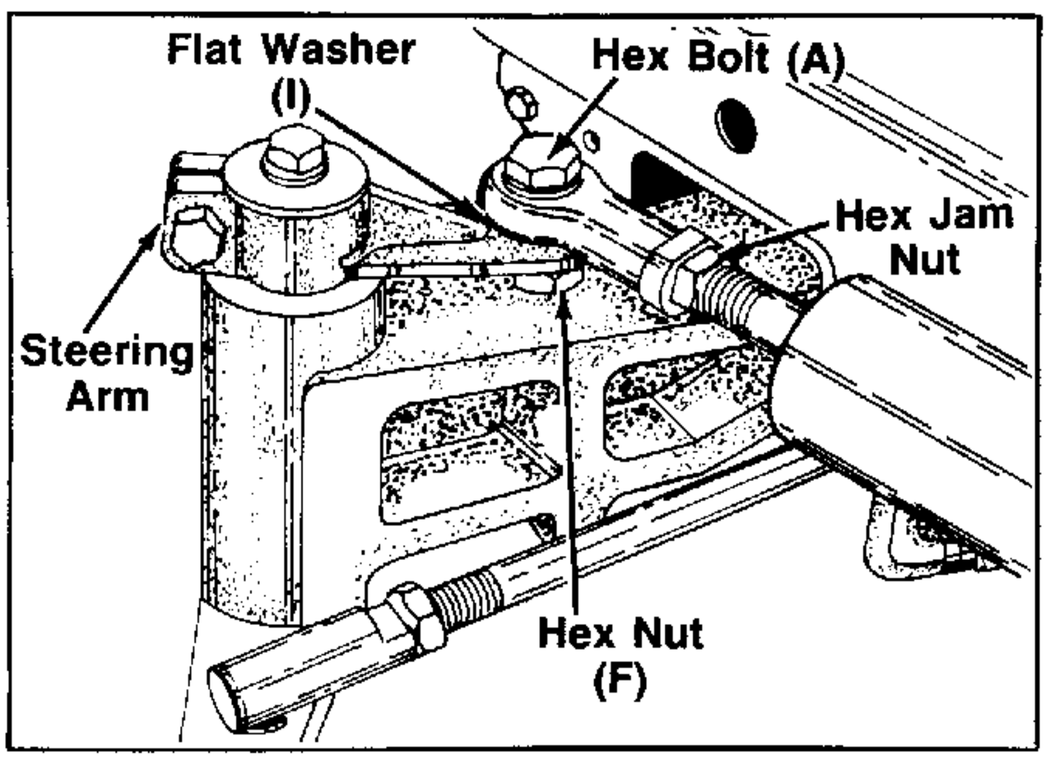

FIGURE 31.

36. Attach the steering hose assembly (AC) (10.5" long) to the 90° fitting on the front of the steering cylinder, making sure not to pinch the hose closed. See figure 29.

37. Attach the steering hose assembly (AD) (8.9" long) to the 90° fitting on the rear of the steering cylinder, making sure not to pinch the hose closed. See figure 29.

38. Install the two frame screens (AK and AL) using six bolts you removed in disassembly section, step 12. See figure 32.

39. Install the rear frame screen (AL) using four hex bolts first, then install the front frame screen (AK) with two remaining bolts. See figure 32.

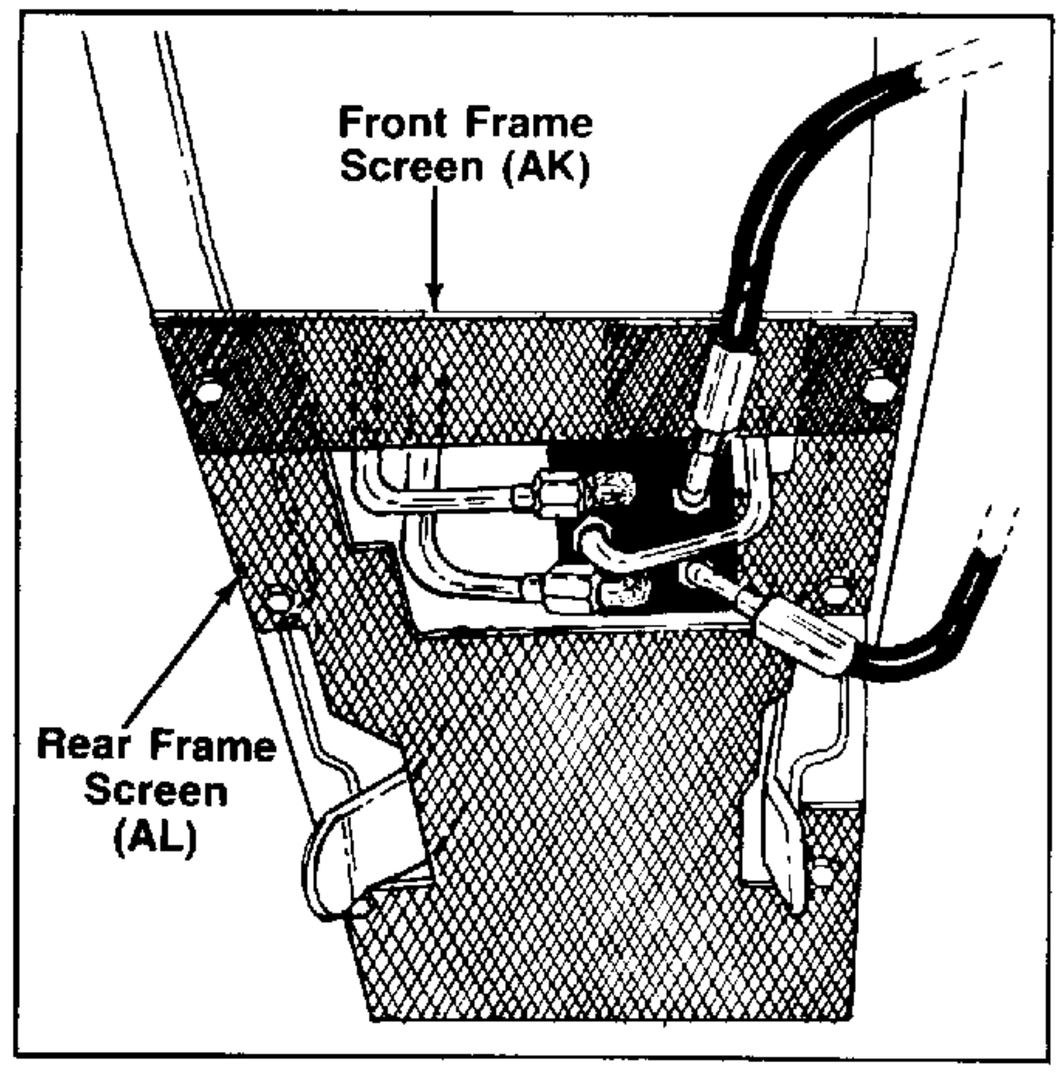

FIGURE 32.

40. Reinstall the fuel tank, fuel line and open fuel shut-off valve.

41. Reinstall the center frame cover, with four self-tapping bolts.

42. Reinstall the two side panels, using two flat washers, wing nuts and one extension spring.

43. Check for leaks at the hose assemblies.

44. Add Cub Cadet transmission fluid to the rear axle; check the dipstick for the proper level.

45. Start the unit and turn the steering wheel a few times to bleed the air from hydraulic system.

NOTE

Recheck the transmission fluid level.

46. Check for proper turning radius of front wheels, adjust as needed.

Design Features Illustration

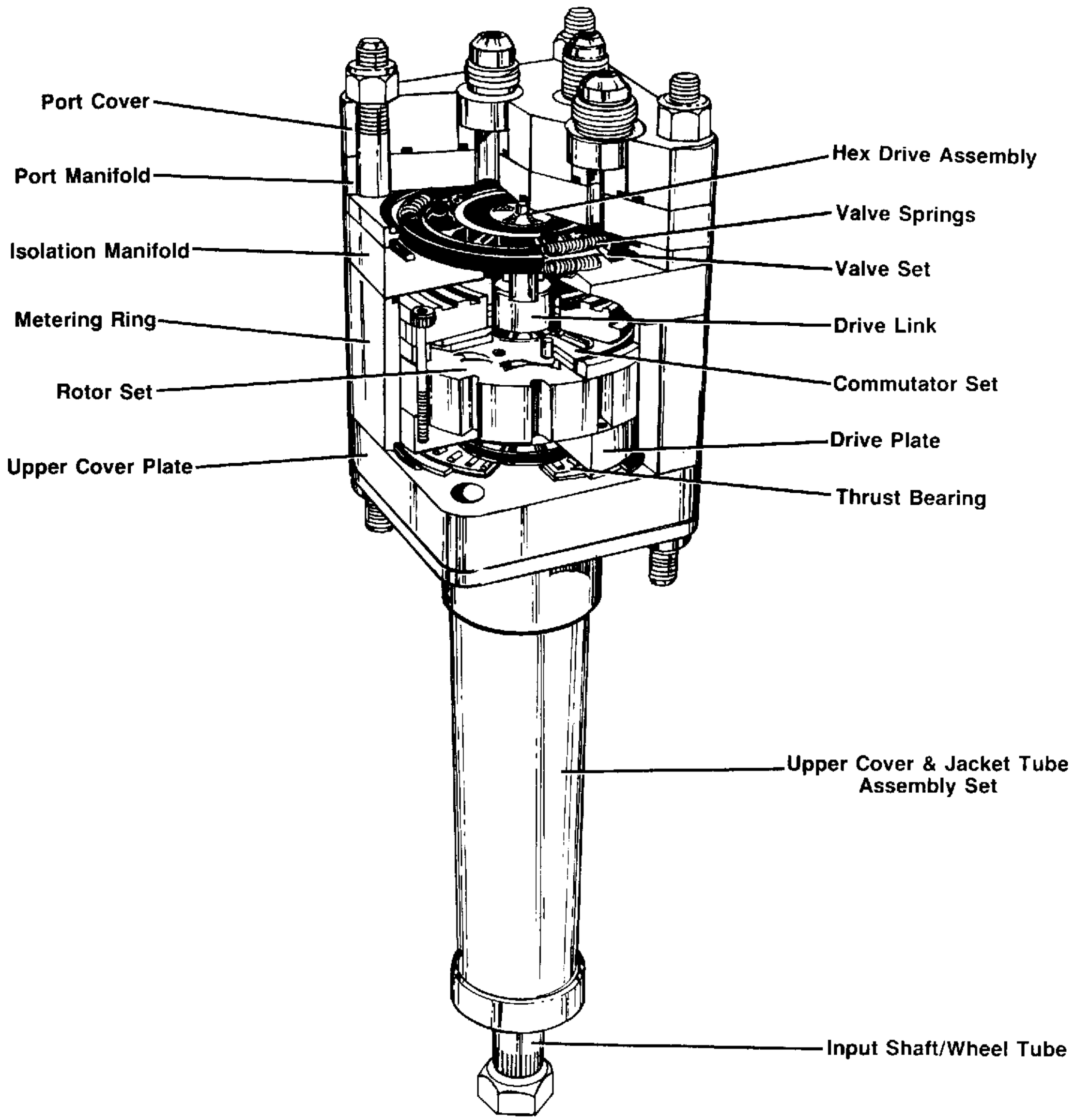

HYDRAGUIDE STEERING SYSTEM

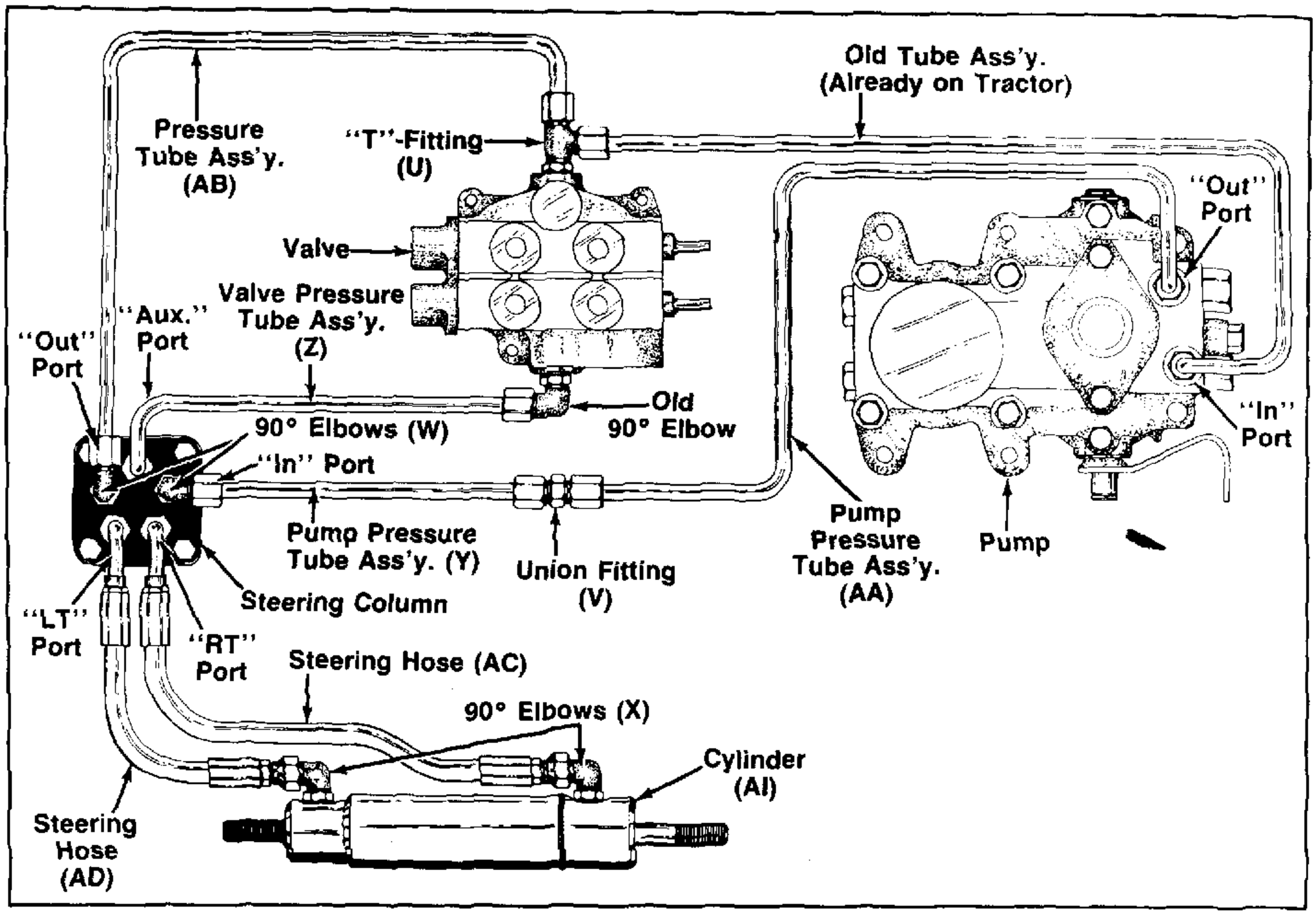

OPEN CENTER HYDRAGUIDE STEERING

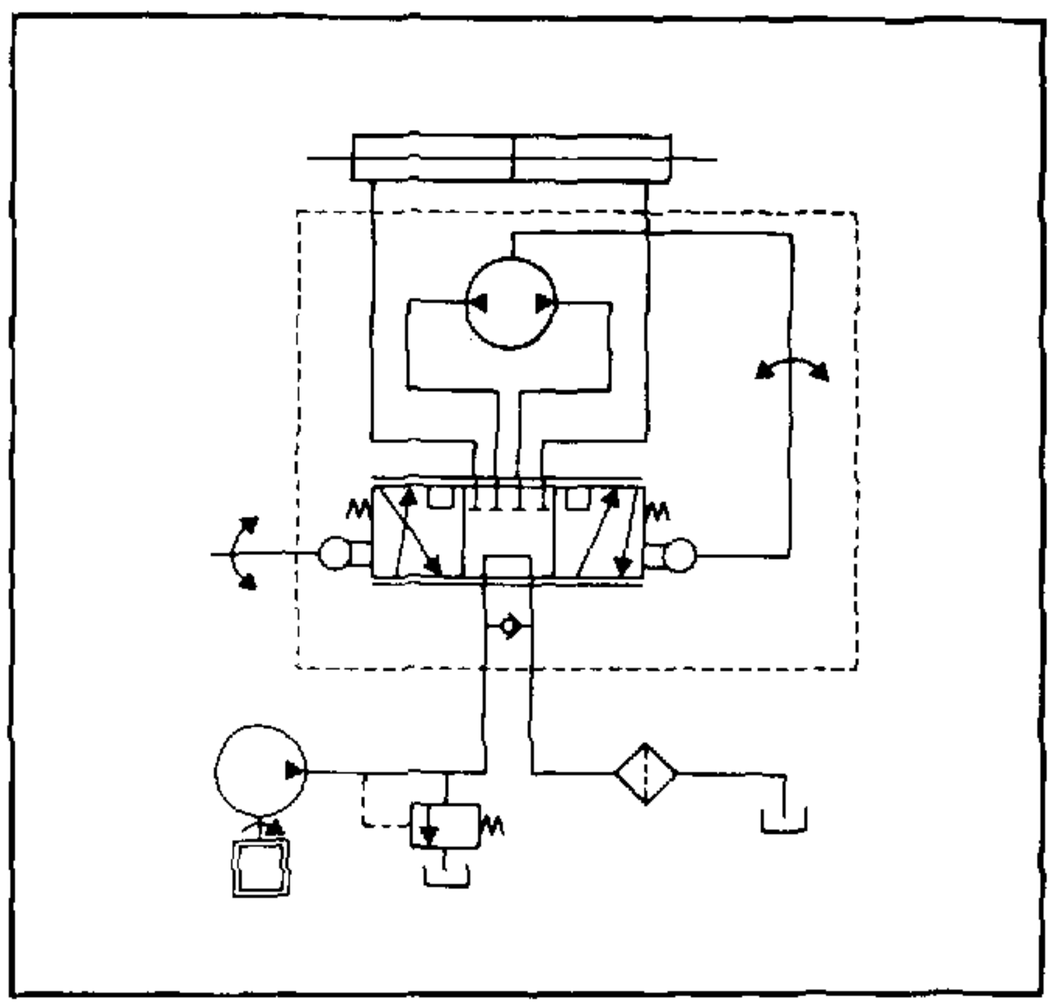

POWER BEYOND HYDRAGUIDE STEERING

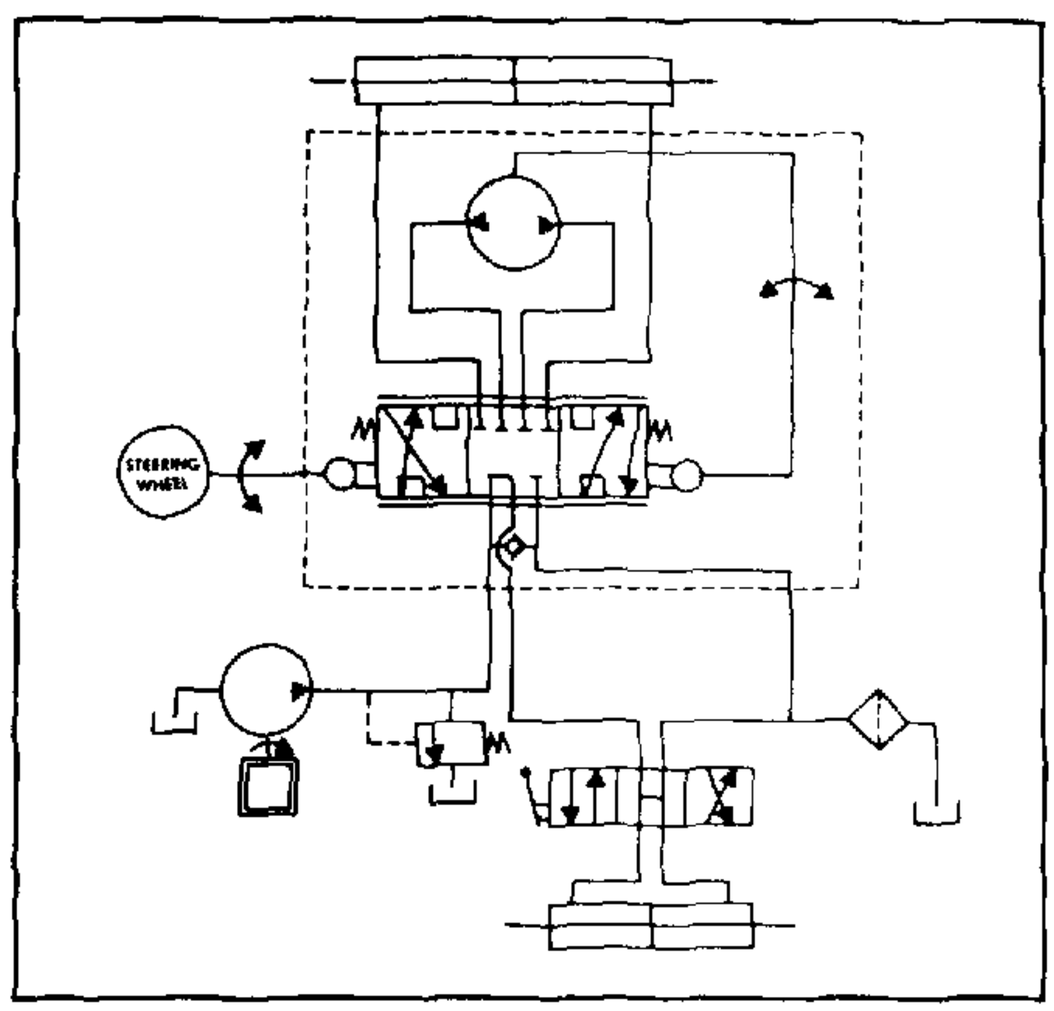

Troubleshooting Guide

NOTE: Before troubleshooting a steering problem, check service literature published by the vehicle and component manufacturers. Follow their instructions, if given, for checking any component but the HGF Hydraguide unit.

PREPARATION

Make your troubleshooting easier by preparing as follows:

- work in a clean, well-lighted place;
- have proper tools and materials nearby;
- have a space set aside where you can lay components, parts, and tools; and
- have an adequate supply of clean petroleum-based solvent.

WARNING: SINCE THEY ARE FLAMMABLE, BE EXTREMELY CAREFUL WHEN USING ANY SOLVENT. EVEN A SMALL EXPLOSION OR FIRE COULD CAUSE INJURY OR DEATH.

WARNING: WEAR EYE PROTECTION AND BE SURE TO COMPLY WITH OSHA OR OTHER MAXIMUM AIR PRESSURE REQUIREMENTS.

PRELIMINARY CHECKS

For all their complexity, hydraulic systems are often trouble-free. The steering problem an operator complains of could be caused by something other than the hydraulic components.

Thus, once you have determined the problem and test driven the vehicle (if possible), start with the easy-to-check items.

On some vehicles, the conditions of the tires, especially on the steered wheels, may affect steering. Make sure pressures are at manufacturer's specifications. Make sure tires are balanced and that they show no signs of damage or severe wear. Check that they are mounted properly.

Check steering and front end linkage. Broken, loose, or binding parts could cause certain steering problems.

See if something in the steering column is loose or binding.

If belts are present, check all of them. A tight belt could also be glazed and a slipping belt doesn't always squeal.

In addition, the following could also contribute to a steering problem:

- an overloaded vehicle;
- parts damaged from impact not properly repaired, or that should have been replaced; and
- improper replacement parts.

HYDRAULIC COMPONENTS

If you think the problem is caused by a hydraulic component, start by checking the easy-to-reach items.

Check all hoses and lines for cracks, hardening, or other signs of wear. Reroute any useable hoses that are kinked, severely bent, or that rest against hot engine parts. Look for leaks, especially at couplings. Replace any hoses or lines that don't meet system flow and pressure ratings.

Next, go to the reservoir and filter or filters. Check fluid level and look for air bubbles. Examine the filter; if it's clogged, follow manufacturer's instructions for cleaning or replacing it. A filter with a minimum 25 micron filtration is recommended for the HGF system.

Visually check other components to see if they are loosely mounted, show signs of leaks, or other damage or wear.

It may be necessary that you perform hydraulic tests on the pump and other hydraulic components. To do so, consult the manuals published by the vehicle or component manufacturers.

Troubleshooting Checklists

I. NOISE

NORMAL NOISE

—A low hissing from the HGF control valve section during a turn
—A noise from the system relief valve when it is actuated
—Pump growl from some types of power steering pumps

ABNORMAL NOISE

—A squealing noise during a turn may indicate that the belt or belts should be tightened or replaced.
—A clicking noise during a turn may indicate that some component is loose and shifting under load.

II. POSSIBLE STEERING PROBLEMS AND CAUSES

STEERING WANDER

—Different size tires
—Tire pressure incorrect or unequal left to right
—Loose or worn steering linkage parts
—Improperly adjusted or worn wheel bearings
—In some vehicles, front end out of alignment

NO RECOVERY FOR OPEN-CYLINDER UNIT

—Tire pressure low
—Steering linkage parts binding
—Tight front axle kingpins
—Steering column binding or misaligned

SHIMMY

—Improperly mounted tire or wheel
—Components in steering linkage loose, worn, or out of adjustment
—Wheels or brake drums out of balance
—Wheel bearings improperly adjusted
—Air in the hydraulic system

HIGH STEERING EFFORT IN ONE DIRECTION

—Vehicle overloaded
—Low hydraulic system pressure
—Excessive system heat causing HGF plate valve to stick. See checklist under Excessive Heat.

HIGH STEERING EFFORT IN BOTH DIRECTIONS

—Different size tires
—Vehicle overloaded
—Low hydraulic fluid level
—Low flow or pressure from pump
—Components in steering linkage binding
—Restriction in fluid return line, or line too small

LOST MOTION (LASH) AT THE STEERING WHEEL

—Steering wheel loose on column
—Components in steering linkage loose or worn
—HGF unit loose at mounting
—Air in hydraulic system

EXCESSIVE HEAT [200°F MAXIMUM (93.3°C)]

—Undersized replacement hose or line
—Kinked or severely bent hose or line
—Restricted oil coolers
—Restricted recentering of HGF unit
—Excessive fluid flow

WARNING: IF THE HYDRAULIC SYSTEM FLUID BECOMES OVERHEATED [IN EXCESS OF 200°F (93.3°C)], SEALS IN THE SYSTEM CAN SHRINK, HARDEN, OR CRACK, THUS LOSING THEIR SEALING ABILITY.

COMPONENT ALIGNMENT GROOVE ILLUSTRATION

COMPONENTS OF THE UNIT WITH ALIGNMENT GROOVES MUST BE ASSEMBLED SO THAT THEIR ALIGNMENT GROOVES ARE POSITIONED AS ILLUSTRATED FOR THE UNIT TO FUNCTION CORRECTLY.

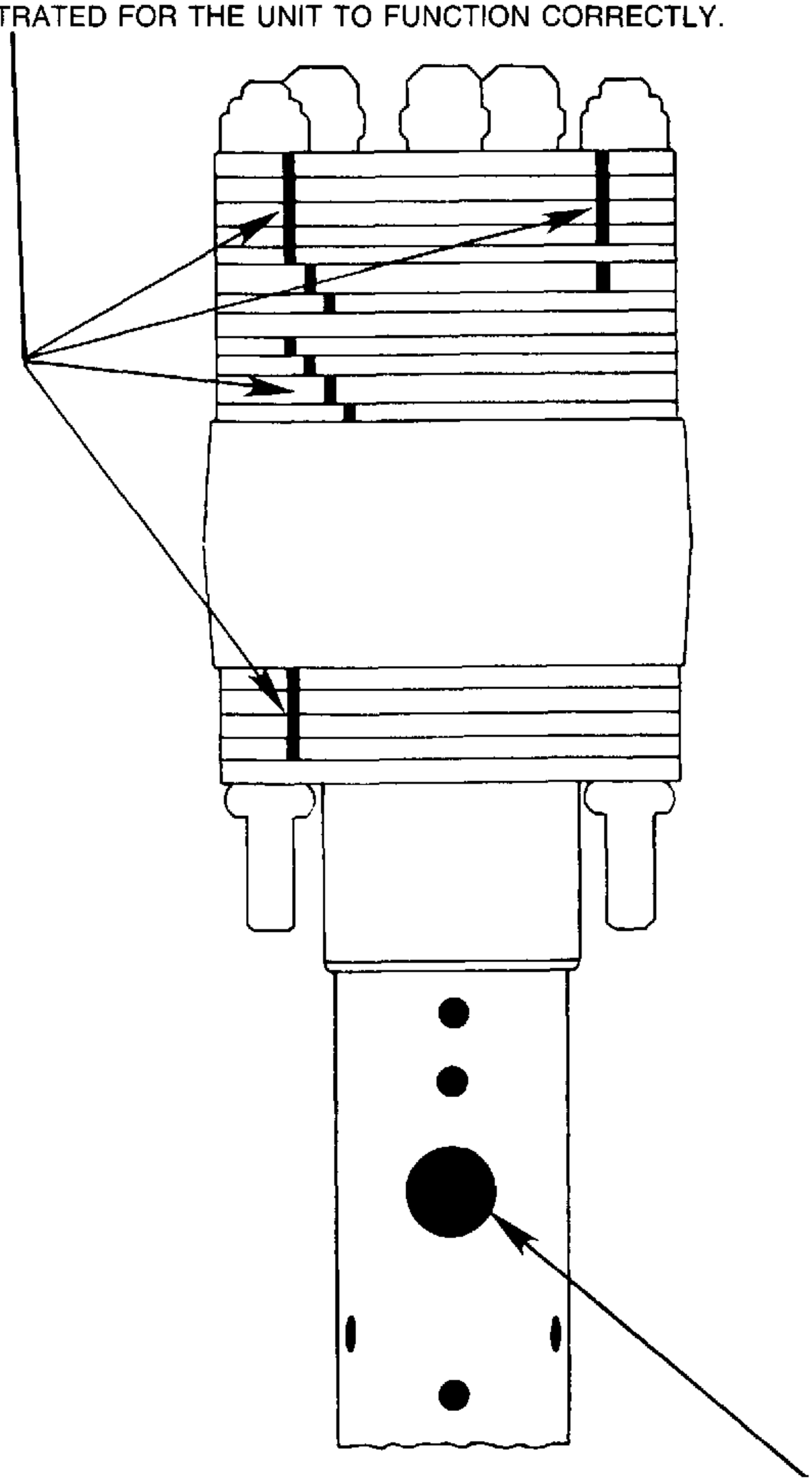

IF THE UNIT BEING DISASSEMBLED HAS A CONTACT BRUSH ASSEMBLY, NOTE THE RADIAL POSITION OF ITS HOLE RELATIVE TO ALIGNMENT GROOVED SIDE OF THE UNIT BEFORE DISASSEMBLY AND REASSEMBLE IN THE SAME RADIAL POSITION.

EXPLODED ASSEMBLY VIEW-TYPICAL

1. Nut 5/16 UNF 24 (4)
2. Port Cover
3. Seal Ring (5)
4. O-Ring (4) or (5)
5. Ball—7/32 inch (6 mm) dia.
6. Plug } Plug & O-Ring Ass'y.
7. O-Ring }
8. Port Manifold
9. Spring, 3/4 inch (19 mm) (3)
10. Hex Drive Ass'y.
11. Alignment Pin (Needle Brg.) (9)
12. Valve Ring } Matched Set
13. Valve Plate }
14. Spring, 1/2 inch (13 mm) (3)
15. Isolation Manifold
16. Drive Link
17. Metering Ring

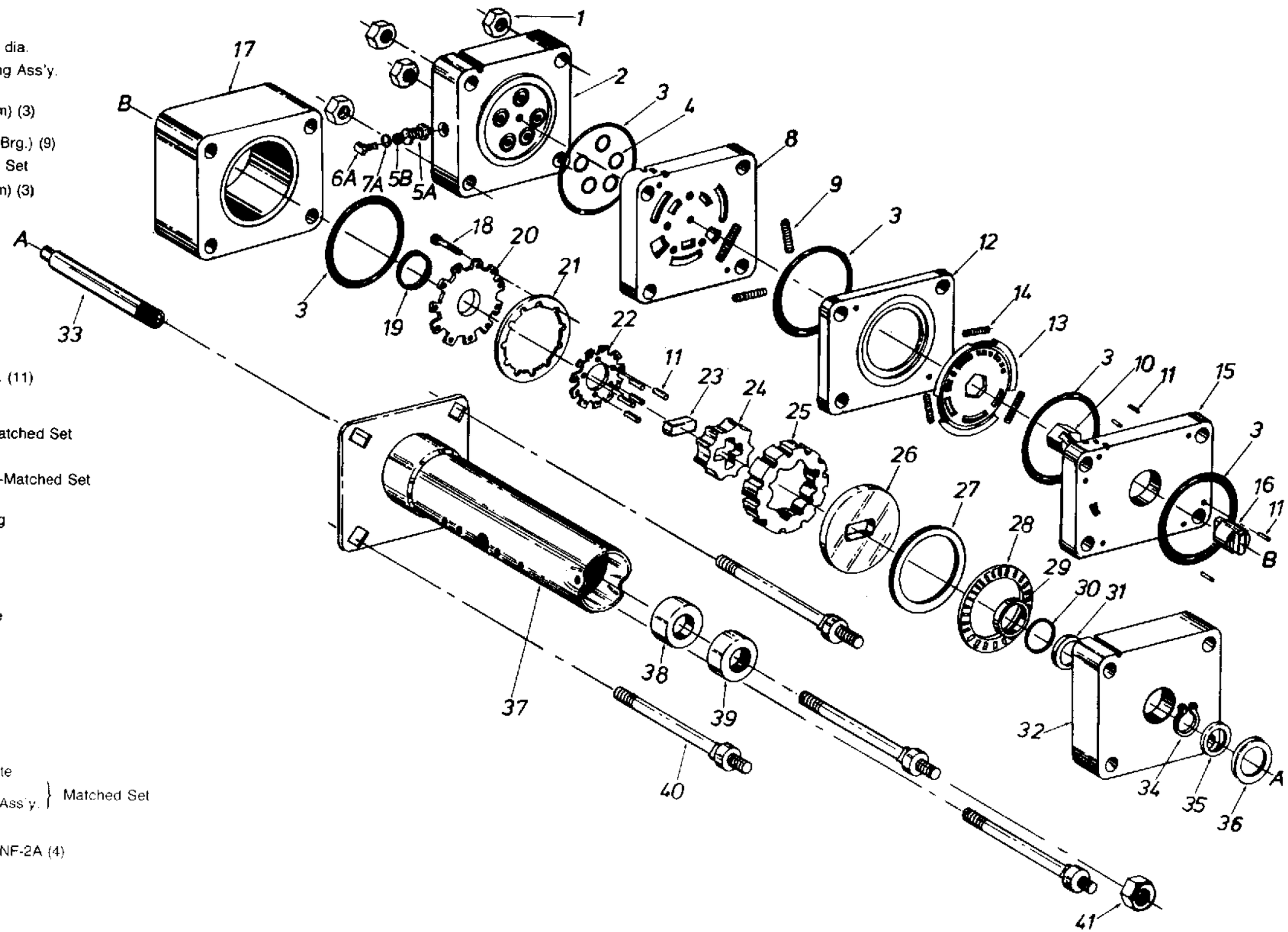

18. Screw, Hex Socket Hd. (11)
19. Seal, Commutator
20. Commutator Cover
21. Commutator Ring } Matched Set
22. Commutator }
23. Spacer—Drive Link
24. Rotor } Rotor Ass'y.—Matched Set
25. Stator }
26. Drive Plate
27. Spacer—Thrust Bearing
28. Thrust Bearing
29. Face Seal
30. Back-up Ring
31. Seal Spacer
32. Upper Cover Plate
33. Input Shaft/Wheel Tube
34. Retaining Ring

35. Washer—Retaining Plate
36. Retaining Plate } Matched Set
37. Upper Cover & Jacket Ass'y. }
38. Bushing
39. Seal
40. Special Bolt, 5/16-24 UNF-2A (4)
41. Nut

*Item #2 and Item #8 may be bonded together as an inseparable integral component that does not utilize Items #4 or an Item #3 as shown.

Tools and Materials Required for Servicing

Service ass'y. fixture
(See Figure 1)

Clean, petroleum-based solvent

Vise

Pliers

Screwdriver

Blunt ended punch

6 Pieces of .007 inch (.18 mm) shim stock, approximately .5 inch (13 mm) wide x 1.5 inch (38 mm) long.

External retaining ring pliers

Tape, plastic electrical

Breaker bar

Sockets: 1/2 inch

3/32 inch Allen wrench socket

T-30 Torx socket

Slot type screwdriver socket

5/16-24 UNF hex. nut (4) required

3/4 inch (19 mm) to 7/8 inch (22 mm) bearing puller

Clean grease

Lightweight oil

Torque wrenches: 11 to 13 in. lb. & ft. lb. or Newton Meter

Feeler gauge .003 in. (.08 mm) or .005 in. (.13 mm)

(See disassembly procedure #37)

Electrical continuity checking device

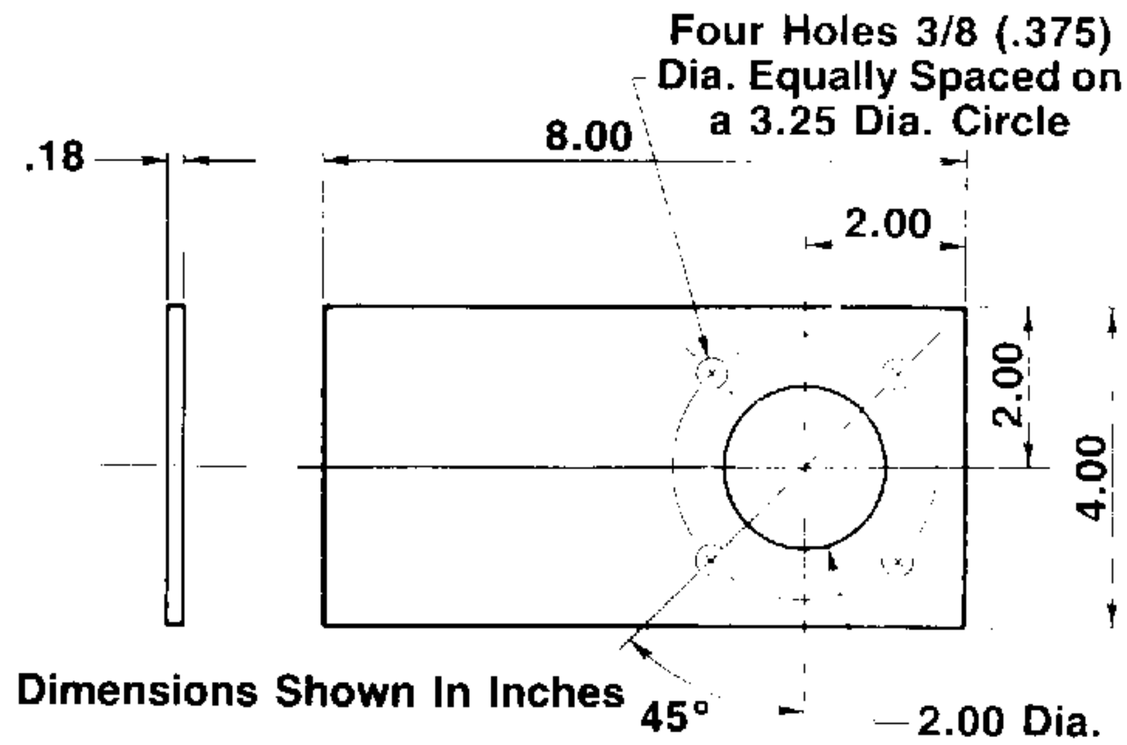

Service Assembly Fixture
(To be fabricated by customer)

FIGURE 1.

CONVERSIONS

INCHES	mm
.18	4.6
.375	9.6
2.0	51.
3.25	82.6
4.0	102.
8.0	203.

Torque Chart

Part Name	Exploded View Item Number	Torque
Socket Head Cap Screws	18	11-13 in-lbs. (1.24-1.47 N m)
Plug and O-Ring Ass'y.	6,7	8-12 ft-lbs. (11-16 N m)
Plug and O-Ring Ass'y.	6A,7A	50-55 ft-lbs. (68-75 N m)
Hex. Nut 5/16-24	1	16-19 ft-lbs. (22-26 N m)
Jam Nut 5/8-18	41	25-30 ft-lbs. (34-41 N m)
Jam Nut 13/16-20 UNEF	41	33-38 ft-lbs. (45-52 N m)

Disassembly and Inspection

PREPARATION BEFORE DISASSEMBLY

Before you disassemble the Hydraguide unit or any of its parts, read this entire manual. It provides important information on parts and procedures you will need to know to service the unit.

When disassembling any of the parts, use a clean workbench. Wash all parts in clean petroleum based solvent and blow them dry. Keep each part separate to avoid nicks and burrs.

WARNING: SINCE THEY ARE FLAMMABLE, BE EXTREMELY CAREFUL WHEN USING ANY SOLVENT. EVEN A SMALL EXPLOSION OR FIRE COULD CAUSE INJURY OR DEATH.

WARNING: WEAR EYE PROTECTION AND BE SURE TO COMPLY WITH OSHA OR OTHER MAXIMUM AIR PRESSURE REQUIREMENTS.

WARNING: REMOVE STEERING WHEEL WITH A STEERING WHEEL PULLER AFTER REMOVING WHEEL NUT. DO NOT LOOSEN WITH HAMMER, AS THIS COULD DAMAGE UNIT INTERNALLY.

Before you disconnect any hoses, clean off all outside dirt from around the fittings. Plug the port holes and hoses immediately after you disconnect the hoses and before you remove the unit from the vehicle. This is to prevent foreign matter from entering the unit and damaging it when you clean and reassemble it.

Remove any contact brush cover (49), contact brush cover seal (48) and related screw and lock washers (50), and disconnect any horn wire connection to the unit. Next, remove nuts from the mounting bolts, blow the unit dry and place it on a workbench.

Components throughout this assembly are stacked on four bolts and held in alignment with alignment pins designed to be a slip fit into the components. Use the minimum force necessary and maximum care to separate or assemble the components.

The Hydraguide unit has several components that are of brazed laminate construction, plates and parts bonded together permanently to form an integral component that is not subject to disassembly for service. Disassemble the unit only to the extent shown in this manual.

CAUTION: Do not force or abuse closely fitted parts, or you may damage them. Use only genuine OEM approved service parts.

place unit in service fixture

1. To avoid distorting or damaging the unit, do not clamp it directly into a vise. Clamp a service assembly fixture described in figure 1, page 2-28, securely in a vise, see figure 3, and place the unit, input shaft/wheel tube first, into the service assembly fixture. Attach the unit to the fixture with four 5/16-24 UNF nuts. See figure 3.

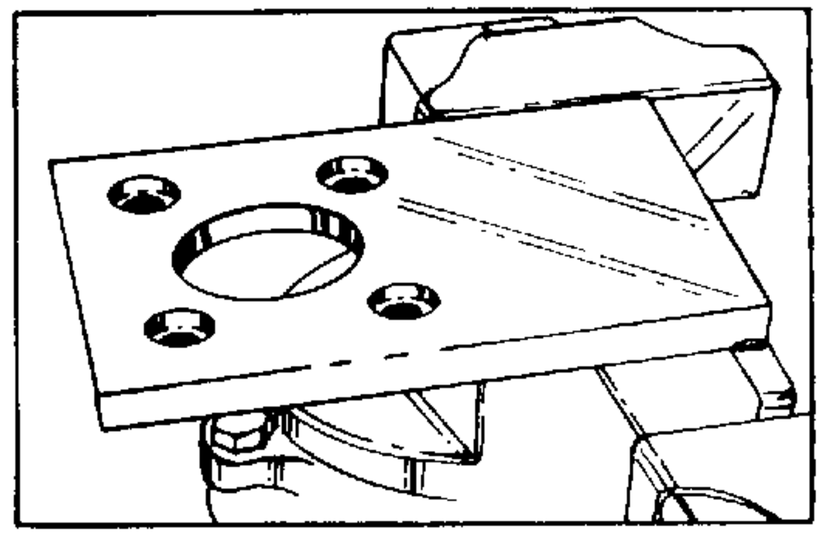

FIGURE 2.

NOTE

NOTE: Before beginning the disassembly of unit, study the relative positions of the alignment grooves on the side of the components in the assembly. Also, note the jacket tube contact brush cover hole radial position relative to the side of the unit with the alignment grooves. The relative alignment groove positions on the components and the jacket tube contact brush cover hole positions must be maintained at reassembly. Refer to the alignment groove graphic on page 2-26.

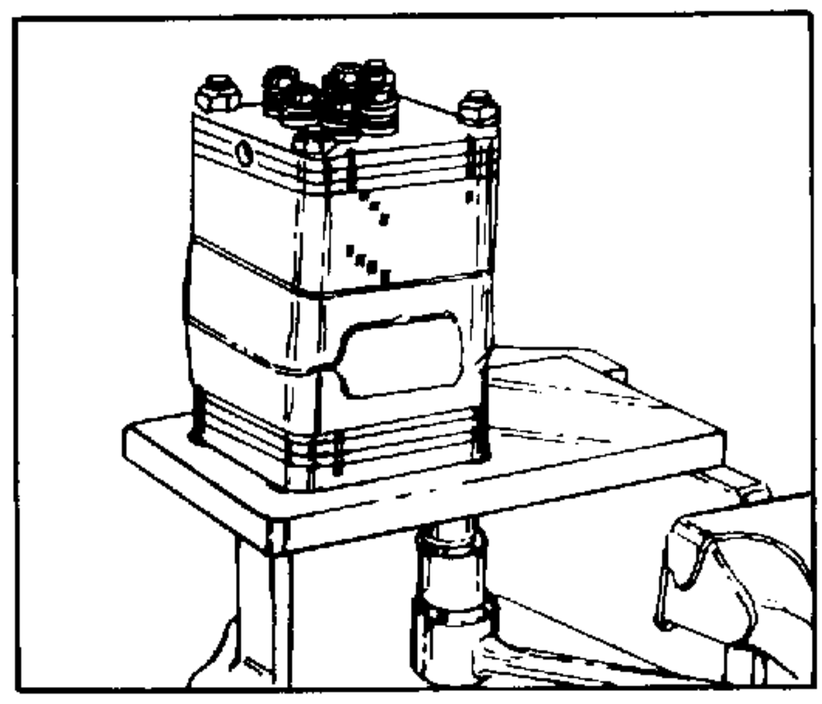

FIGURE 3.

loosen plug assembly

2. Loosen plug (6) or hex plug (6A) assembly in the port cover (2) for disassembly after the port cover is removed from the unit. Use an appropriate type screwdriver, T-30 Torx driver or 7/8 inch hex socket. See figure 4.

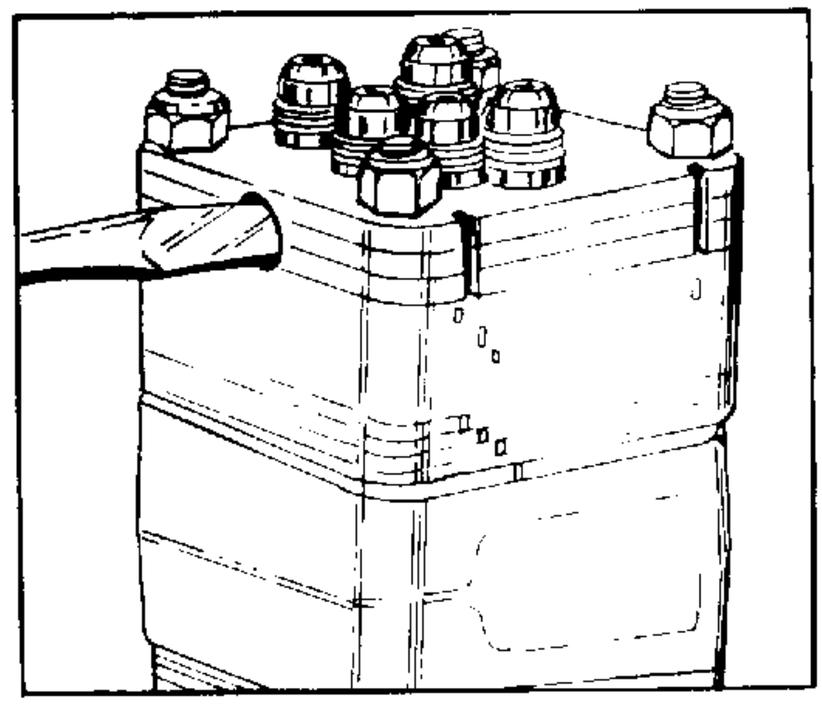

FIGURE 4.

remove port cover nuts

3. Remove the four retaining nuts (1) from the port cover (2) assembly. Be careful not to damage the protruding ports. See figure 5. Replace any nut that has damaged threads or hex.

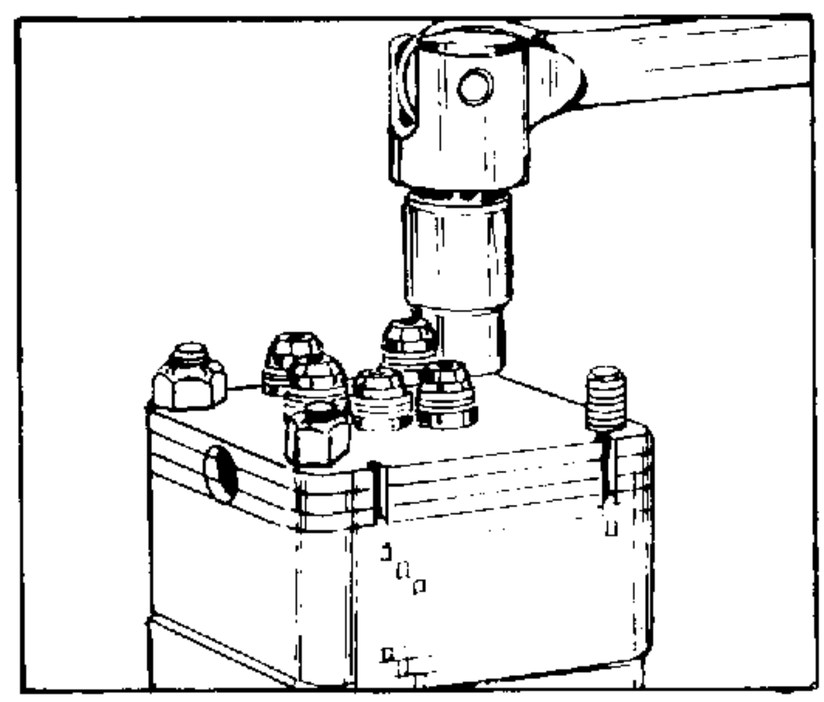

FIGURE 5.

remove port cover

4. Grasp the port covr (2) assembly (four plates bonded together) and lift it from the unit. Discard the four or five O-rings (4) and seal ring (3). See figure 6.

CAUTION

4A. CAUTION: On some units the port cover (2) and port manifold (8) are brazed together as an integral component and **cannot be separated,** negating the requirement of a seal ring (3) and any O-rings (4) sandwiched between them. Be prepared to catch the three springs (9) which may become disengaged from this integral component (2)/(8) as it is removed from the assembly.

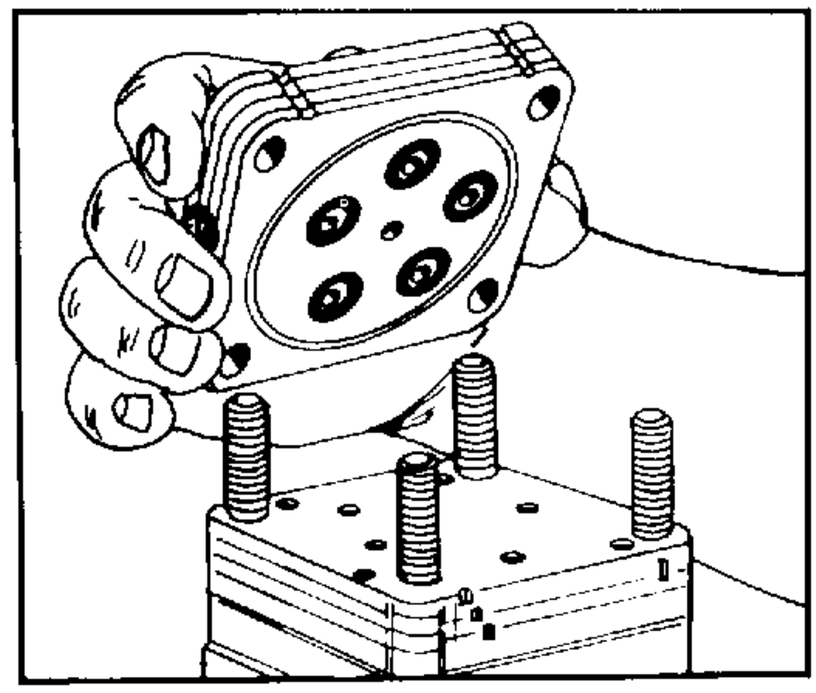

FIGURE 6.

remove plug and ball

5. If included, remove the loosened plug (6) and O-ring (7) assembly from the port cover. Be ready to catch the steel check ball (5) as it falls from its cavity. Discard O-ring (7). See figure 7.

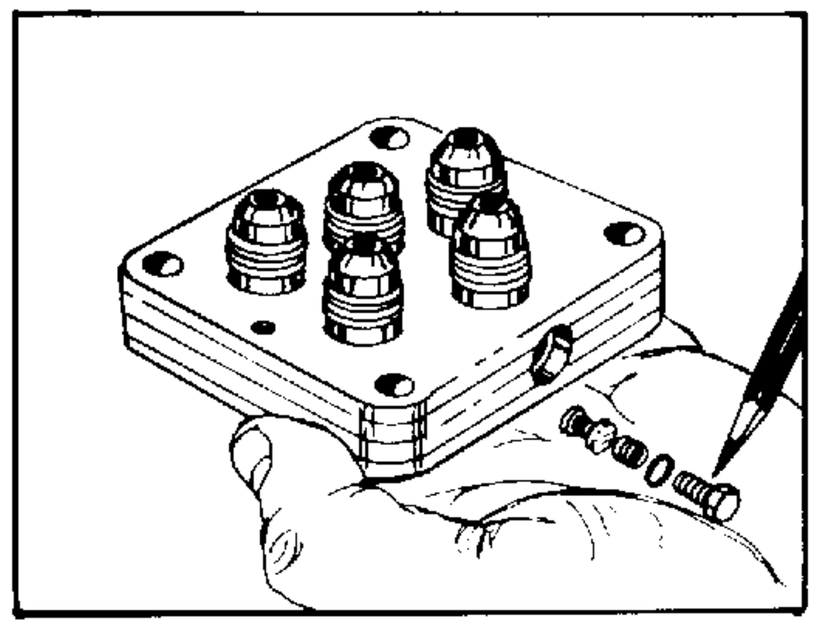

FIGURE 7.

remove hex cap and valve, spring cartridge assembly

5A. If included, remove from the port cover (2) the loosened hex plug (6A) and O-ring (7A). Discard O-ring. Remove relief valve cartridge and spring assembly (5A) and (5B). Replace valve and spring assembly (5A) if spring is distorted or bent. A bent or lost spring (5B) can be serviced separately. See figure 8.

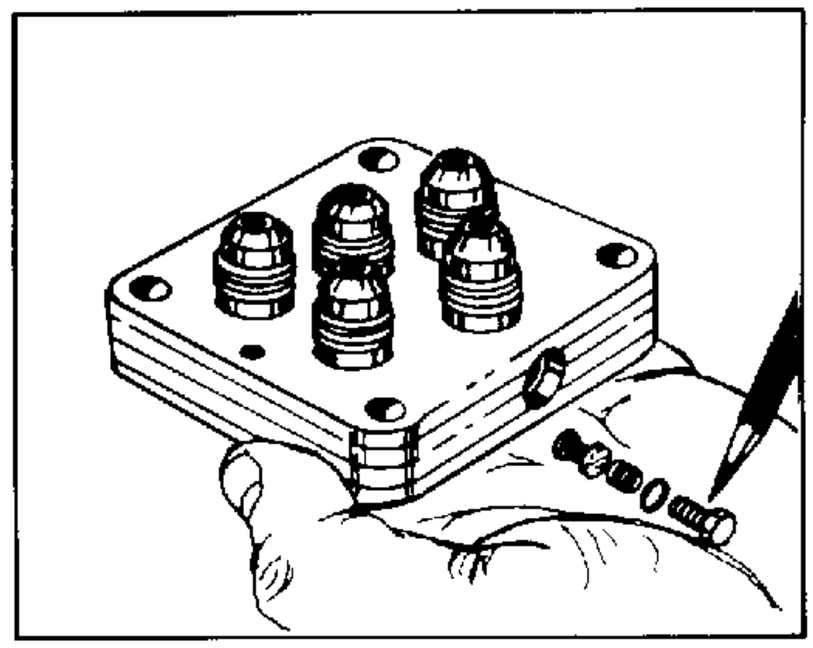

FIGURE 8.

inspect the port cover

6. Inspect the port cover (2) for port fitting sealing surface scratches and thread damage. Replace port cover, if these conditions are evident.

remove port manifold

7. Carefully lift the port manifold (8) (3 plates bonded together) from the unit. See figure 9.

NOTE

NOTE: Be prepared to catch three springs (9) which may become disengaged when removing the port manifold.

remove these springs

8. Remove three springs (9) from the port manifold (8).

NOTE

NOTE: The unit has two different length spring sets. The set you have just removed from the port manifold is three-quarter inch (19 mm) long. Keep this set of three springs separate from the next set of three springs to be removed.

inspect springs

9. Inspect the springs for bent or distorted coils. If a spring is broken or deformed, all six springs in the unit should be replaced.

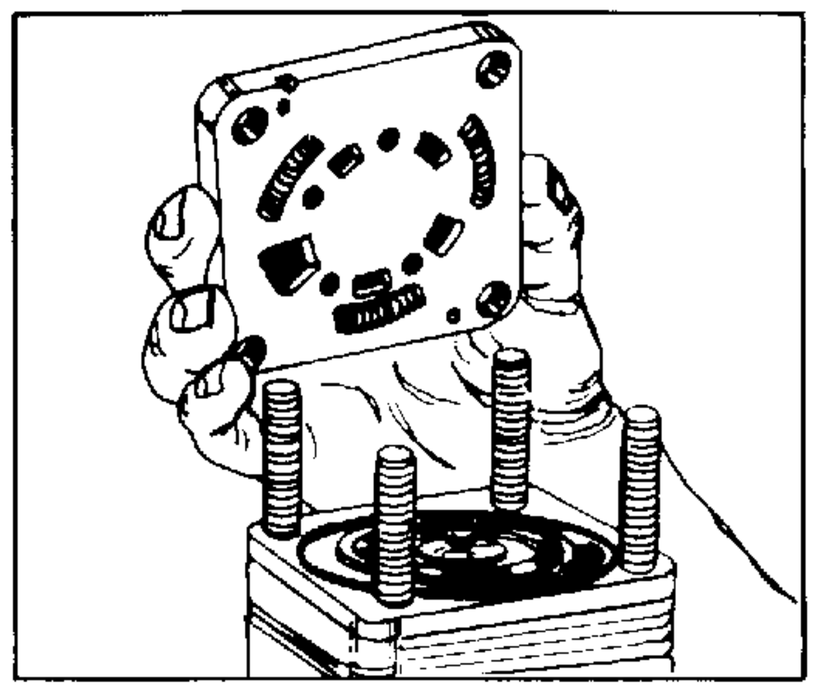

FIGURE 9.

inspect port manifold 10. Inspect the ground surfaces of the port manifold (8). You should notice a "normal" polished pattern due to the rotation of the valve plate (13) and hex drive assembly (10). All edges should be sharp and free of nicks and burrs. The surfaces of the port manifold should be free of scratches or scoring. If any of these wear conditions exist, replace the port manifold.

CAUTION CAUTION: Many components in the unit have finely ground surfaces. Be careful not to nick or scratch these surfaces.

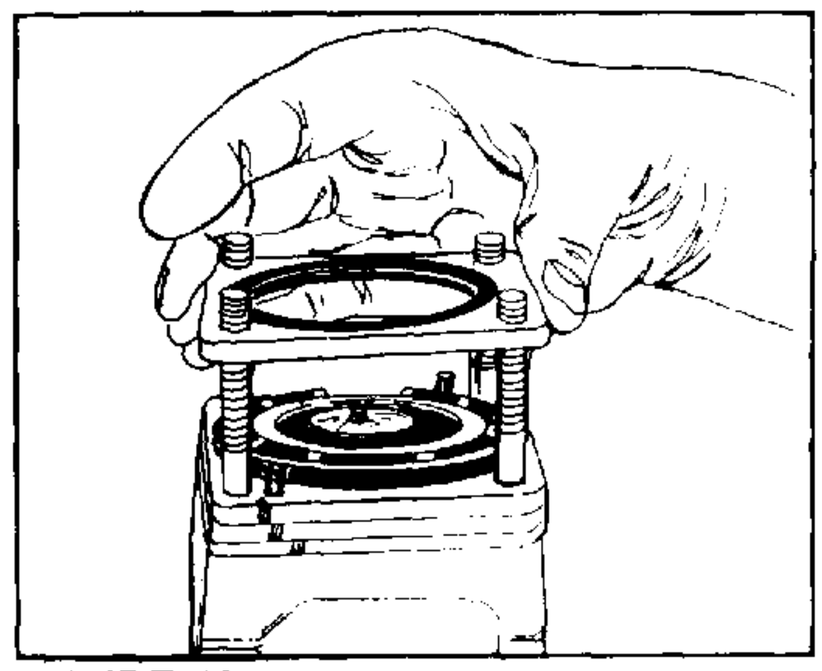

FIGURE 10.

remove valve ring 11. Remove the valve ring (12), discard the two seal rings (3). See figures 10 and 11. The valve ring should be free of nicks and scoring.

remove valve plate 12. Remove the valve plate (13) by lifting it from the isolation manifold (15).

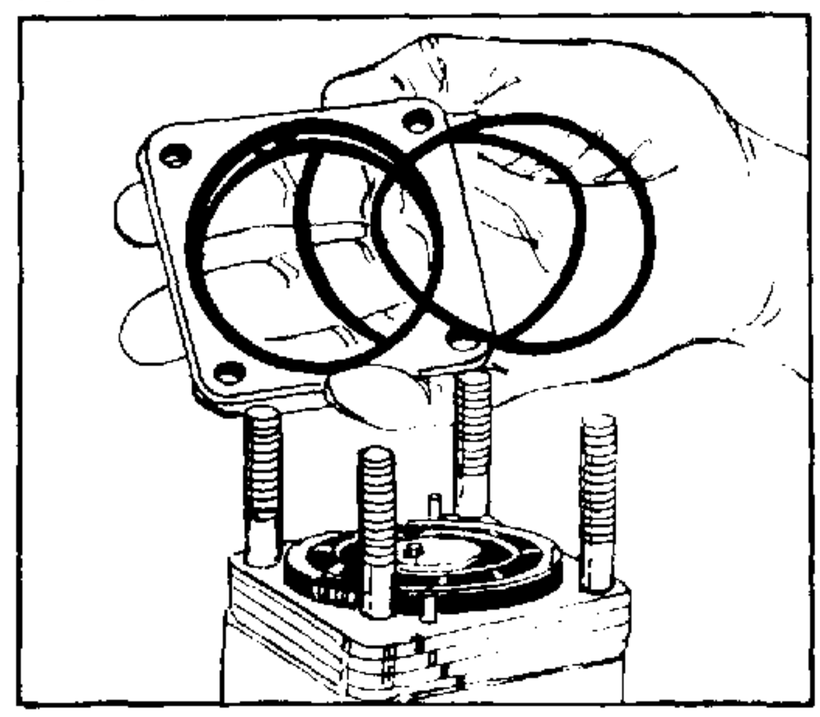

FIGURE 11.

inspect valve plate 13. Inspect the slot edges and ground surfaces. If the valve plate (13) shows nicks or scoring or the edges are not sharp, it must be replaced. See figure 12.

NOTE NOTE: The valve ring (12) and valve plate (13) are a matched set and must be replaced as a set.

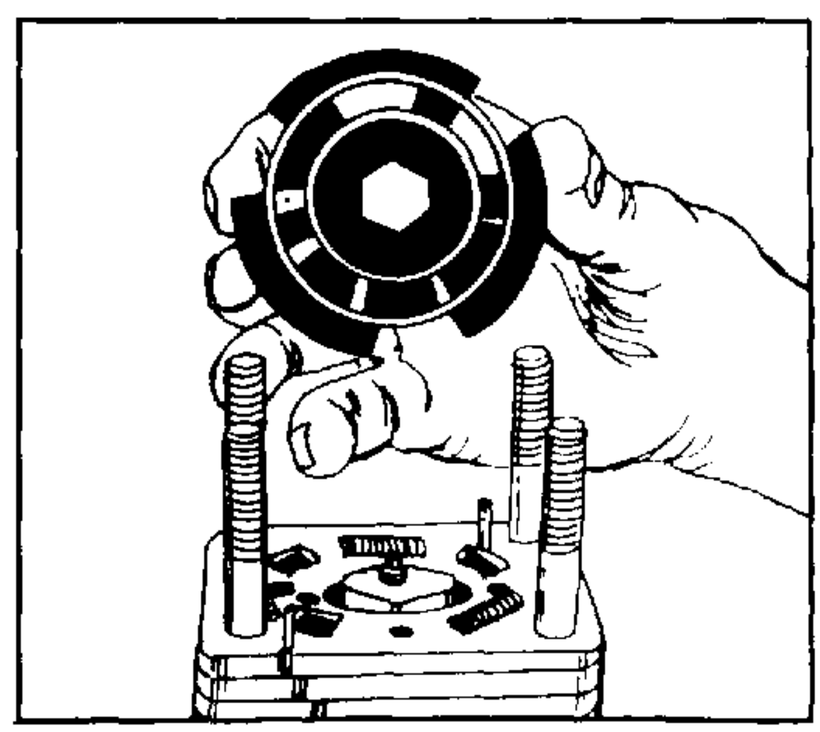

FIGURE 12.

remove springs 14. Remove three springs (14) from the isolation manifold (15) pockets. See figure 13.

NOTE NOTE: The unit has two different length spring sets. The set you have just removed from the isolation manifold is one-half inch (13 mm) long. Keep this spring set separate from the set removed from the port manifold (8).

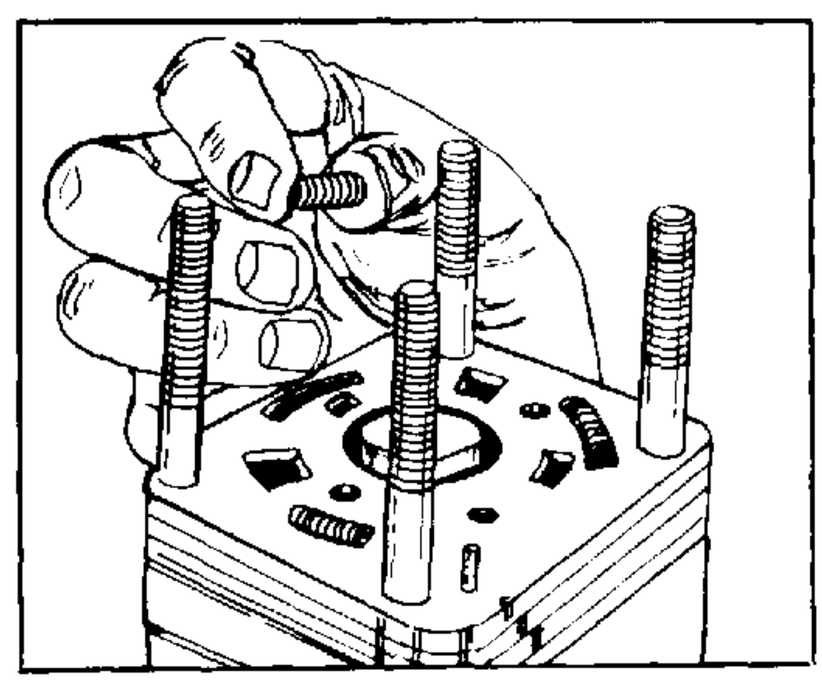

FIGURE 13.

inspect springs

15. Inspect the springs (14), for bent or distorted coils. If a spring is broken or deformed, all six springs in the unit must be replaced. See figure 14.

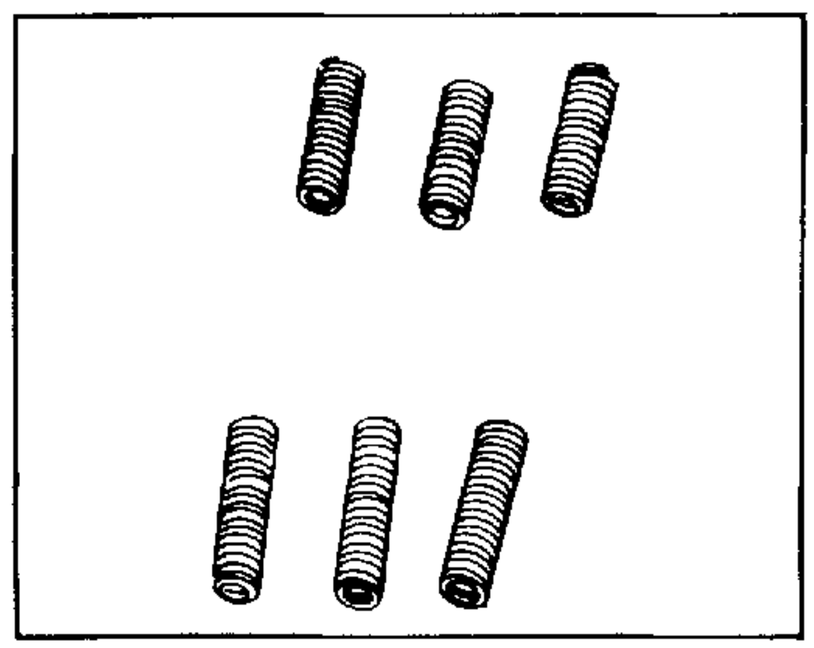

FIGURE 14.

Remove hex. drive assembly

16. Remove hex. drive assembly (10) from drive link (16). See figure 15.

Inspect hex drive assembly

17. The pin in the hex. drive assembly (10) should not show wear and must be firmly pressed in place. The sides of the hex. and the slot should not have grooves or scoring. If the hex. drive assembly (10) shows signs of this type of wear, it must be replaced.

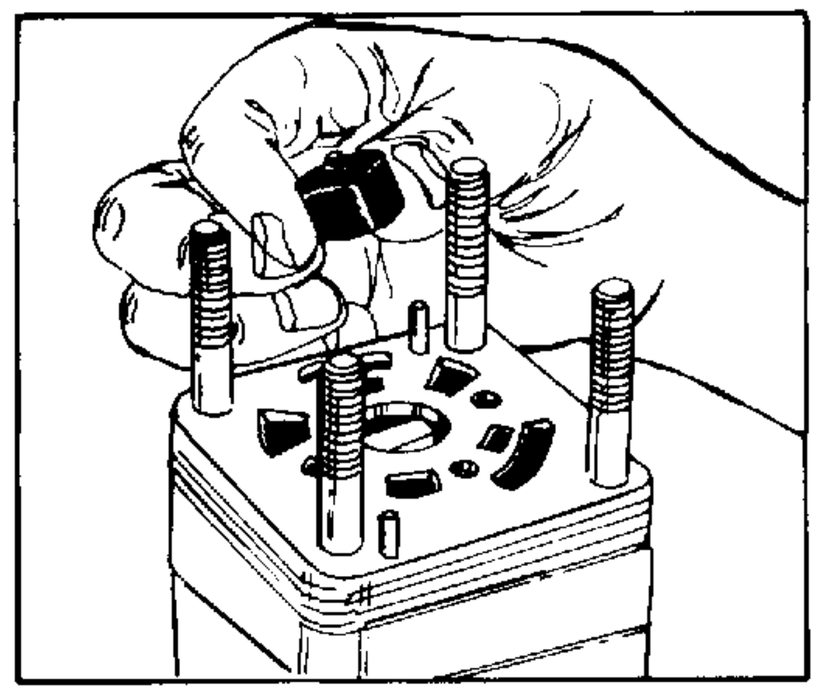

FIGURE 15.

remove alignment pins

18. Remove the two alignment pins (11) that align the port manifold (8), valve ring (12) and isolation manifold (15). See figure 16.

NOTE

NOTE: A service kit of nine alignment pins (11) is available for servicing the unit.

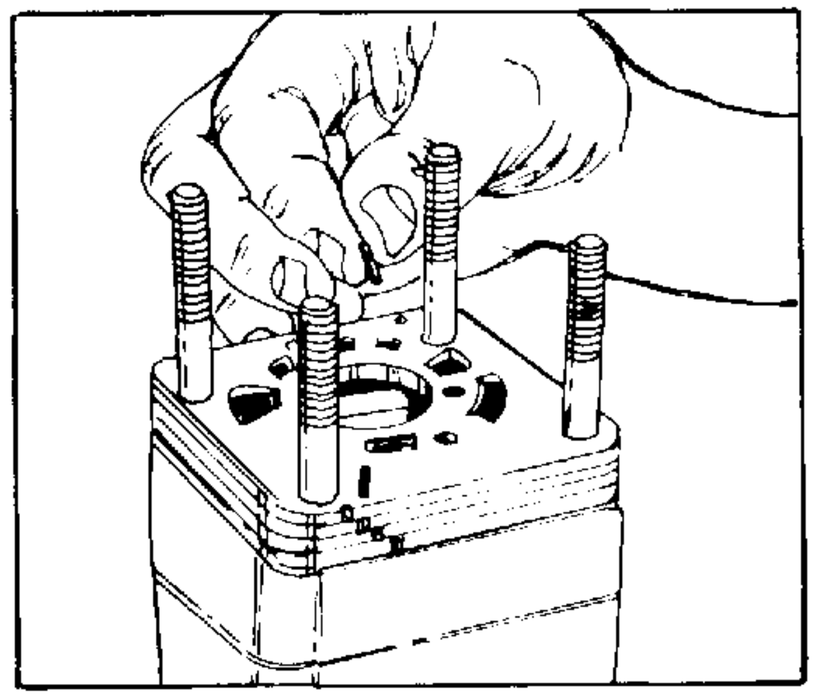

FIGURE 16.

remove isolation manifold

19. Remove the isolation manifold (15), (four plates bonded together). See figure 17.

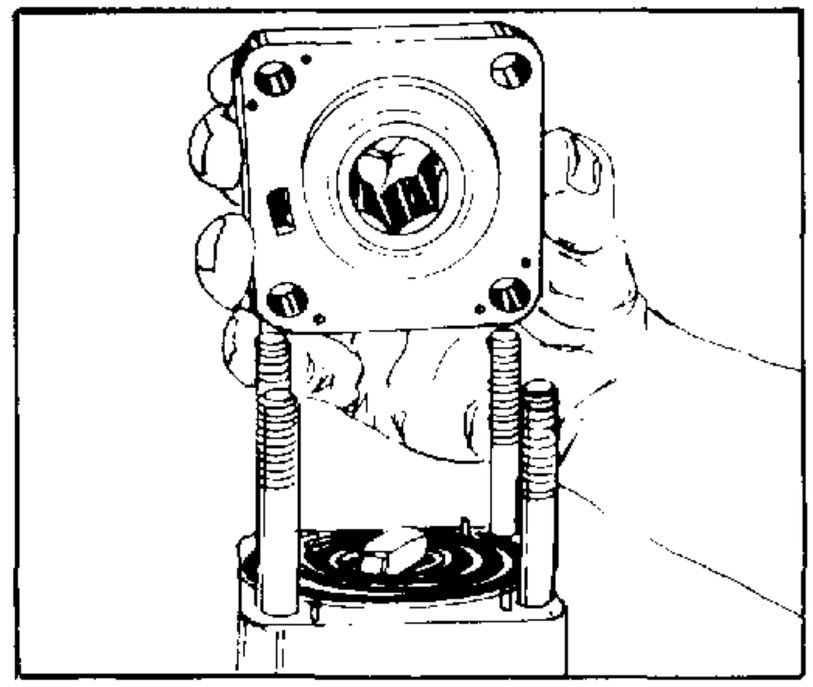

FIGURE 17.

inspect isolation manifold

20. Inspect the ground surfaces of the isolation manifold (15). You should notice a "normal" polished pattern due to the rotation of the valve plate (13) and on the opposite side a "normal" polished pattern due to the action of the commutator cover (20) and commutator seal (19). The holes and edges should be free of nicks. The manifold surfaces should be free of nicks or scoring. If the manifold has developed any of these conditions, it must be replaced.

remove alignment pins

21. Remove the two isolation manifold-metering ring alignment pins (11). See figure 18.

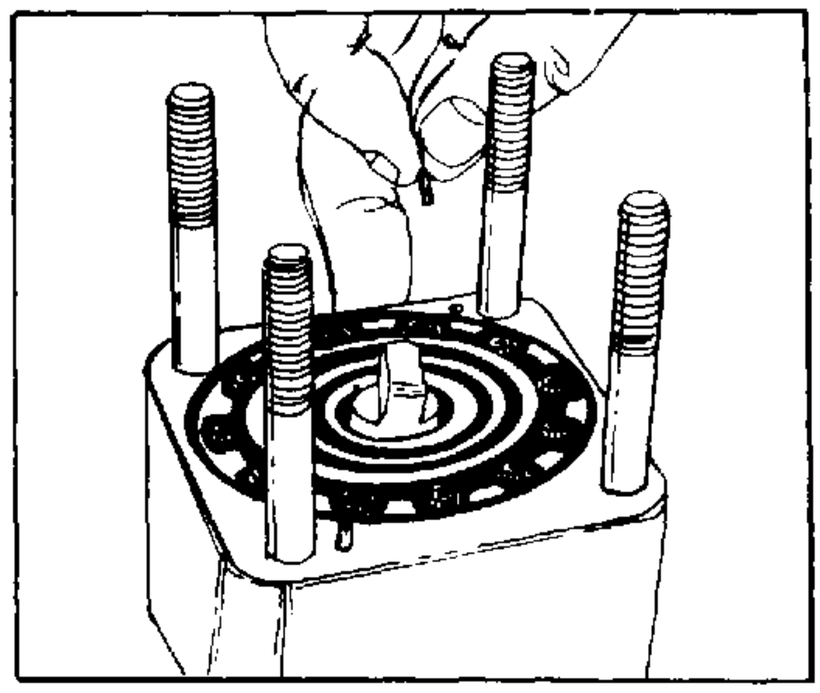

FIGURE 18.

remove drive link

22. Remove the drive link (16) from the unit. See figure 19.

inspect drive link

23. Inspect each end of the drive link (16). The four crowned contact surfaces should not be worn or scored. Replace if wear or scoring is evident.

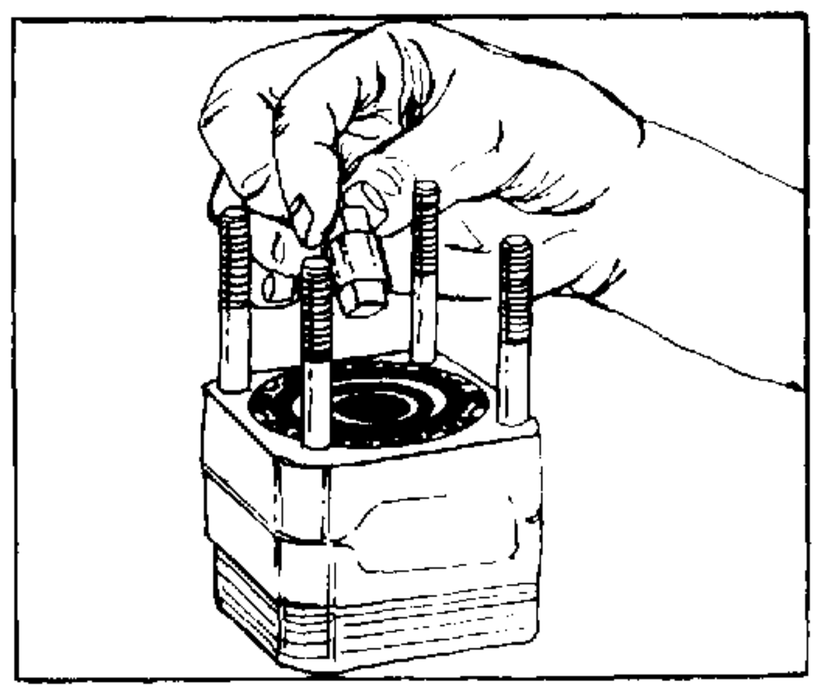

FIGURE 19.

remove & inspect metering ring

24. Remove the metering ring (17) and discard the two seal rings (3). See figure 20. If the metering ring bore is scored, it should be replaced.

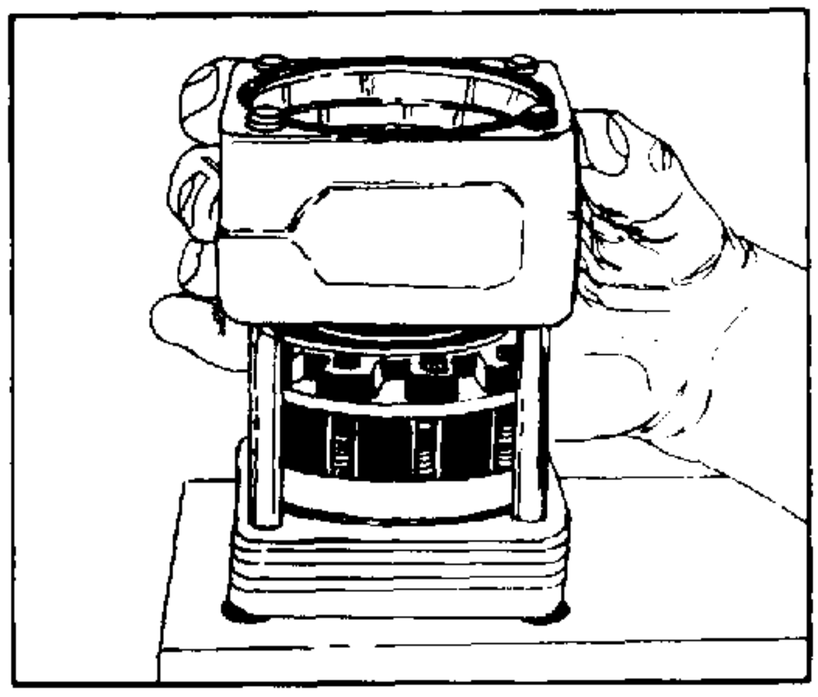

FIGURE 20.

remove metering package

25. The "metering package" components are held together with eleven hex. socket head screws. Lift the metering package from the assembly, and place it on a clean surface. See figure 21.

CAUTION

CAUTION: Do not clamp the metering package in vise, as this could damage the components.

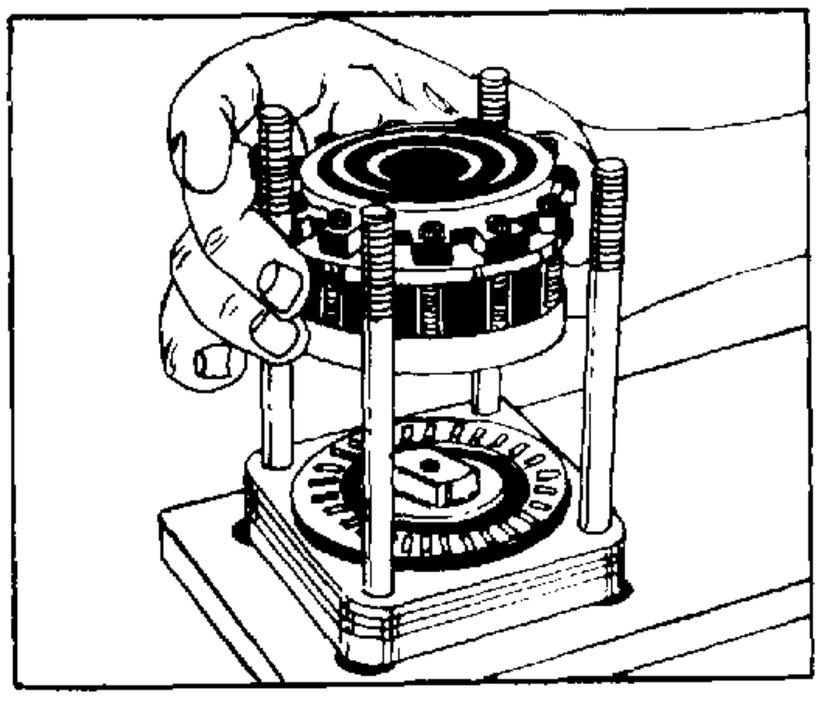

FIGURE 21.

remove commutator seal

26. Remove and discard the commutator seal (19) from the commutator cover (20). See figure 22.

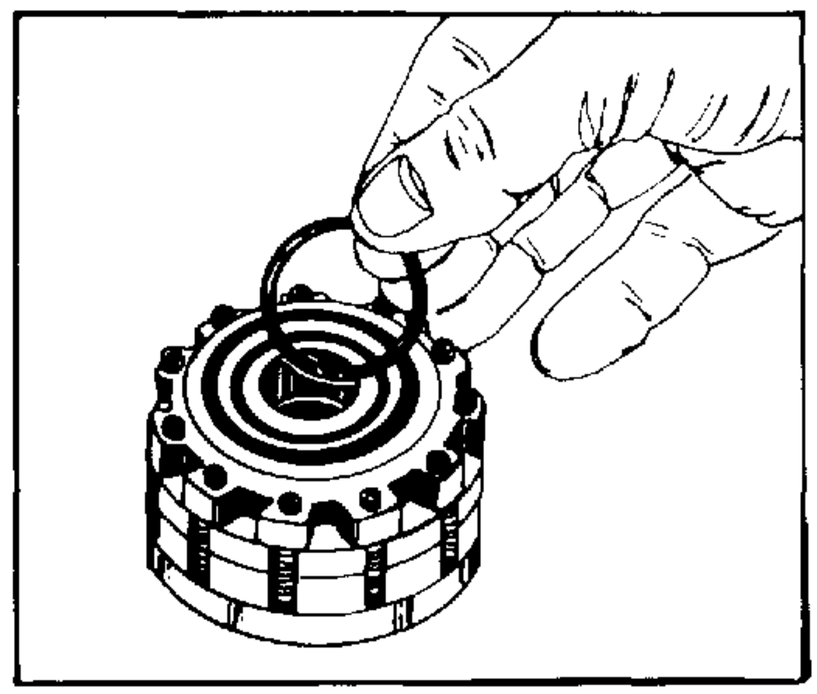

FIGURE 22.

remove cap screws

27. Remove the eleven hex socket head screws (18), that hold the metering package together. See figure 23. Use a 3/32 inch Allen wrench. Inspect screws for thread and socket damage and replace as required.

remove commutator cover

28. Lift the commutator cover (20) from the metering package.

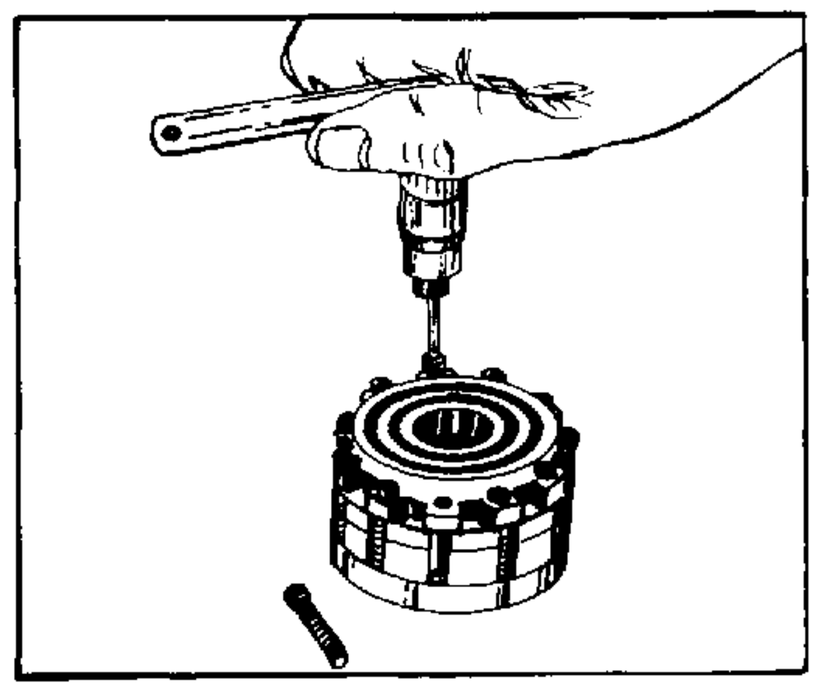

FIGURE 23.

inspect commutator cover

29. Inspect the ground surfaces of the commutator cover (20). You should notice a "normal" polished pattern due to the rotation of the commutator (22). If the cover has nicks, burrs, or scoring, it must be replaced. See figure 24.

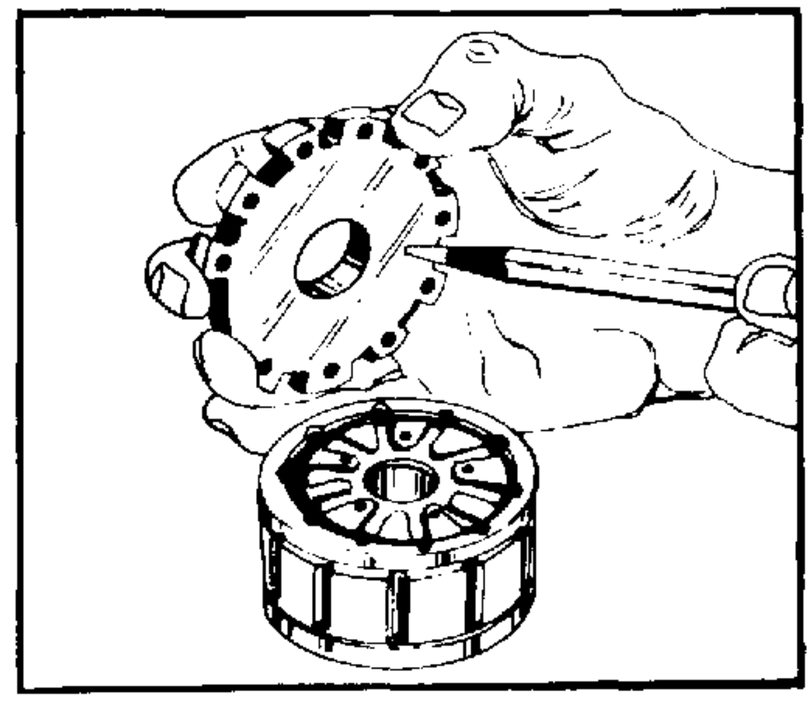

FIGURE 24.

remove commutator ring

30. Remove commutator ring (21). See figure 25. Inspect for cracks, burrs and scoring.

CAUTION

CAUTION: Handle commutator ring with care, as it is easily broken.

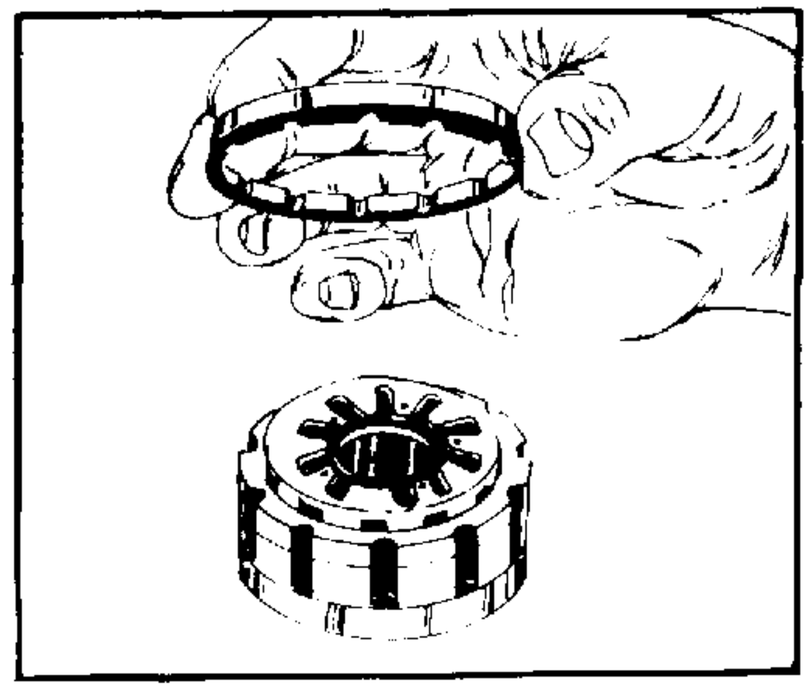

FIGURE 25.

remove commutator 31. Remove the commutator (22) from the rotor (24). See figure 26.

CAUTION CAUTION: Five alignment pins (11) connect the commutator to the rotor with a slip fit. Care and minimum force should be used to separate the two components.

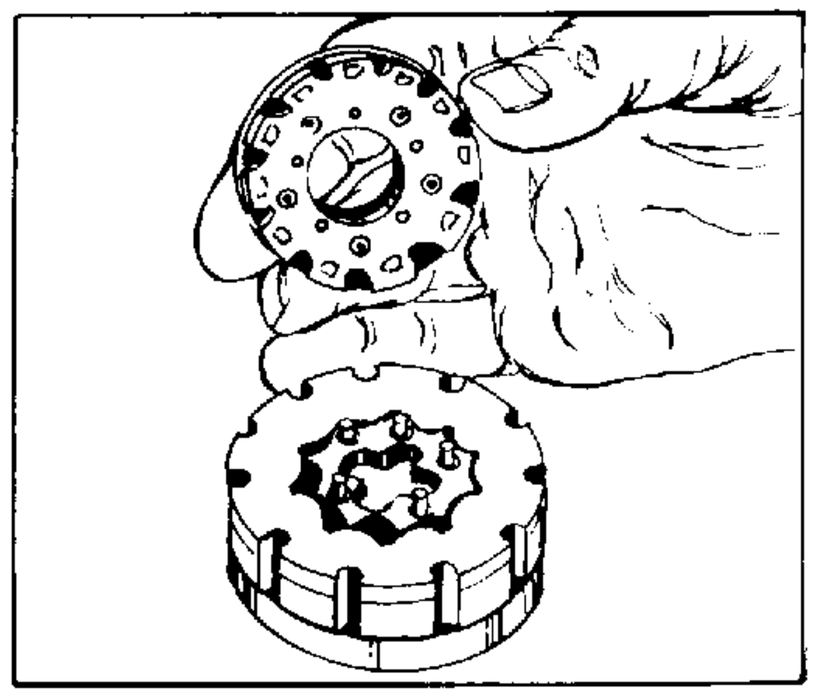

FIGURE 26.

remove alignment pins 32. Remove the five alignment pins (11). See figure 27.

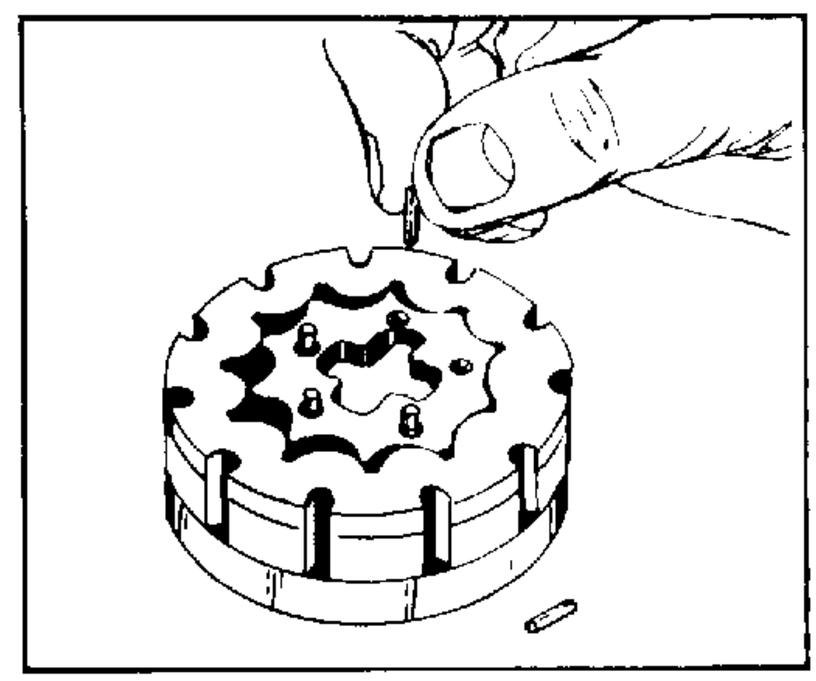

FIGURE 27.

remove & inspect drive link spacer 33. Remove drive link spacer (23). See figure 28. Replace it, if it is grooved or worn.

inspect commutator 34. The commutator (22) is made up of two round plates pinned and bonded together as a permanent assembly and is not subject to further disassembly. Inspect the ground surfaces of the commutator. The holes and edges should be free of nicks. The ground surfaces should be free of scoring. The edges should be sharp.

NOTE NOTE: The commutator (22) and commutator ring (21) are a matched set. If either is worn or damaged, you must replace the set.

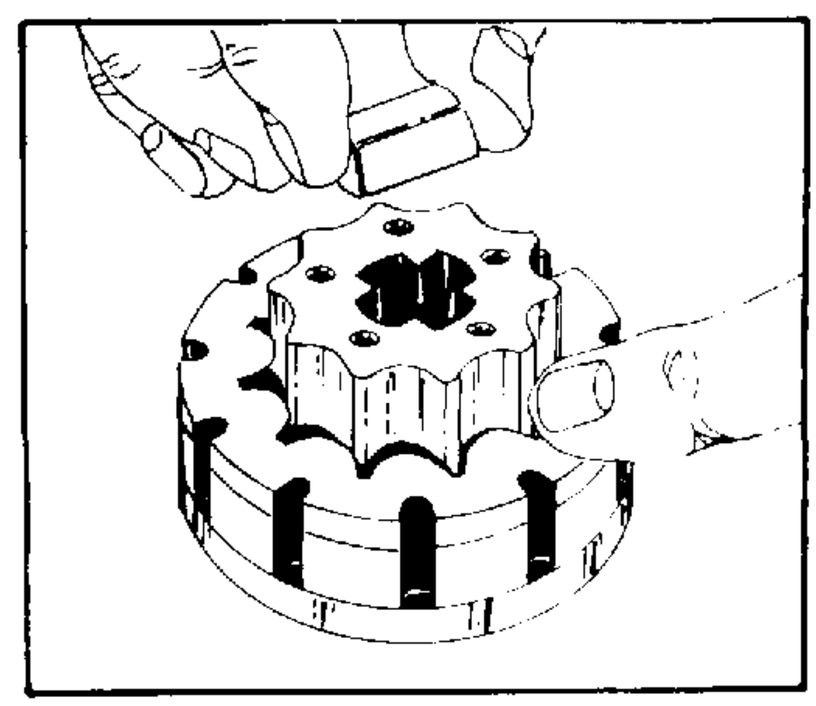

FIGURE 28.

inspect rotor set 35. With the rotor set (24, 25) lying on the drive plate (26), the rotor (24) should rotate and orbit freely within the stator (25). The commutator side of the stator face must be free of grooves or scoring.

NOTE NOTE: The rotor (24) and stator (25) are a matched set. You must replace them as a matched set, if either is worn or damaged.

check rotor stator "tip" clearance

36. Check the rotor (24) lobe "tip" to stator (25) lobe "tip" clearance, using the appropriate feeler gage. See figure 29. The rotor lobe, directly across from the rotor lobe tip being gaged, (see pointer figure 29) must be centered between stator lobes during the gaging process. A rotor and stator that is .75 inches (19 mm) or less in height has a maximum allowable "tip" clearance of .003 inches (.08 mm). A rotor and stator that is 1.00 inch (25.4 mm) or more in height, has a maximum allowable "tip" clearance of .005 inches (.13 mm). A rotor and stator that exceeds the maximum allowable "tip" clearance, must be replaced.

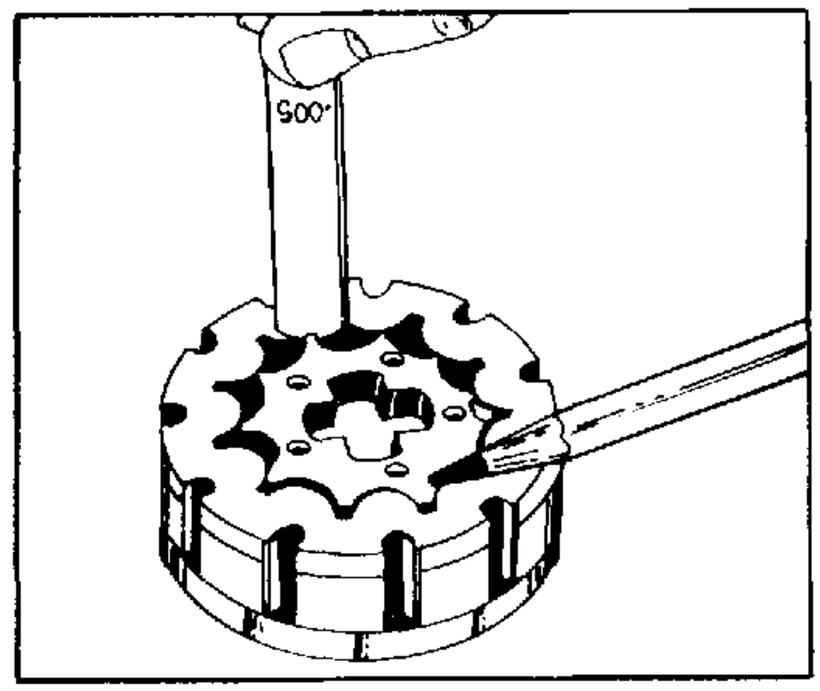

FIGURE 29.

remove rotor set

37. Remove the rotor set (24, 25), from the drive plate (26). The drive plate side of the rotor set also must be free of grooves or scoring.

NOTE

NOTE: Handle the rotor set carefully to avoid nicks and scratches.

inspect drive plate

38. The rotor side of the drive plate (26) should show the "normal" spiral pattern due to rotor movement. Inspect the thrust bearing side of the plate for brinelling (dents) or spalling (flaking). The flat sides of the input shaft engagement hole should not be grooved or worn. If any of these conditions are present, the drive plate (26) must be replaced. See figures 30 and 31.

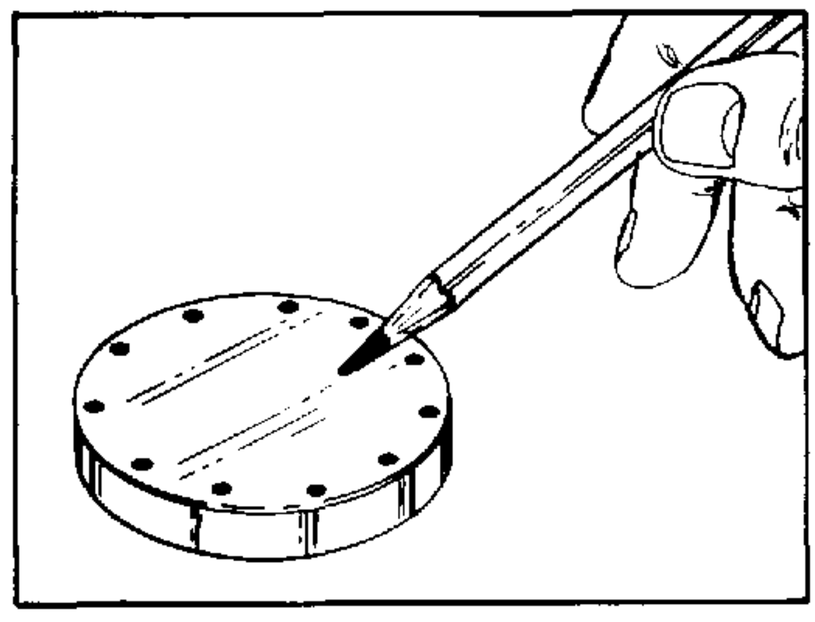

FIGURE 30.

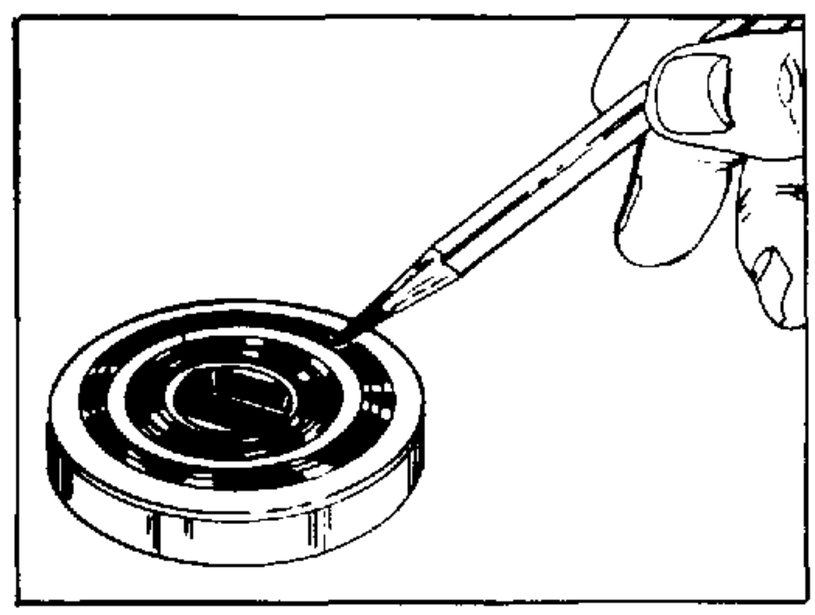

FIGURE 31.

remove face seal, back-up ring and spacer

39. Remove face seal (29), back-up ring (30), and face seal spacer (31) from upper cover plate (32). See figure 32. Discard the face seal (29) and back-up ring (30). Retain metal spacer (31).

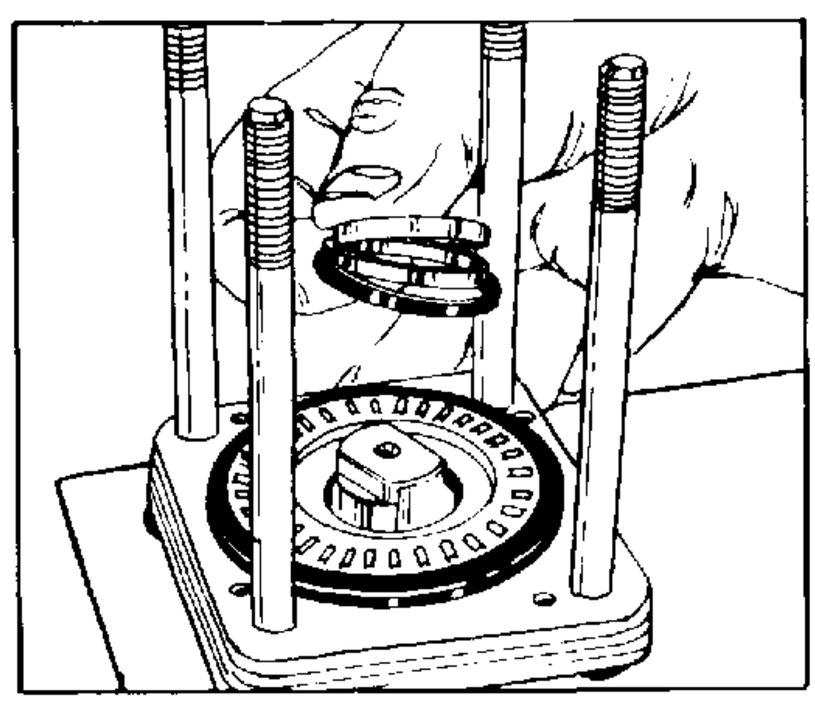

FIGURE 32.

remove thrust bearing and spacer

40. Remove thrust bearing (28) and bearing spacer (27) from upper cover plate (32). See figure 33.

inspect bearing and spacers

41. Inspect the thrust bearing (28) for brinelling (dents) or spalling (flaking); if either exists, or if one or more of the rolls are lost or broken, replace the bearing assembly. See figure 33. Replace seal spacer (31) or bearing spacer (27) if worn or broken.

NOTE

NOTE: The thrust bearing assembly (28) will have 16 or 17 rolls evenly spaced in a roller cage that can hold 32 or 34 rolls or the thrust bearing will have a full complement of 32 or 34 rolls. The bearing assembly with 32 or 34 rolls should not be replaced with a bearing assembly that has 16 or 17 rolls.

NOTE

NOTE: For reassembly purposes, note the radial position of the alignment grooved edge of the upper cover plate (32) relative to the jacket tube contact brush hole if the unit is so equipped.

remove and inspect upper cover plate

42. Remove the upper cover plate (32) (four plates bonded together). Inspect the upper cover plate. You should notice some polishing due to the action of the seal. The plate should be free of brinelling (dents) or spalling (flaking). If it is damaged, the upper cover plate must be replaced. See figure 34.

remove dirt and water seal

43. Slide the seal (39) from the jacket tube. If the seal is worn or damaged, it must be replaced. See figure 35.

remove input shaft/wheel tube

44. Remove the input shaft/wheel tube (33) assembly, sliding it out of the upper cover end of the assembly. See figure 36.

NOTE

NOTE: If the input shaft/wheel tube assembly has 7/8 serrations or contact ring assembly (43), the washer (35) and retaining plate (36) will be removed with input shaft/wheel tube assembly.

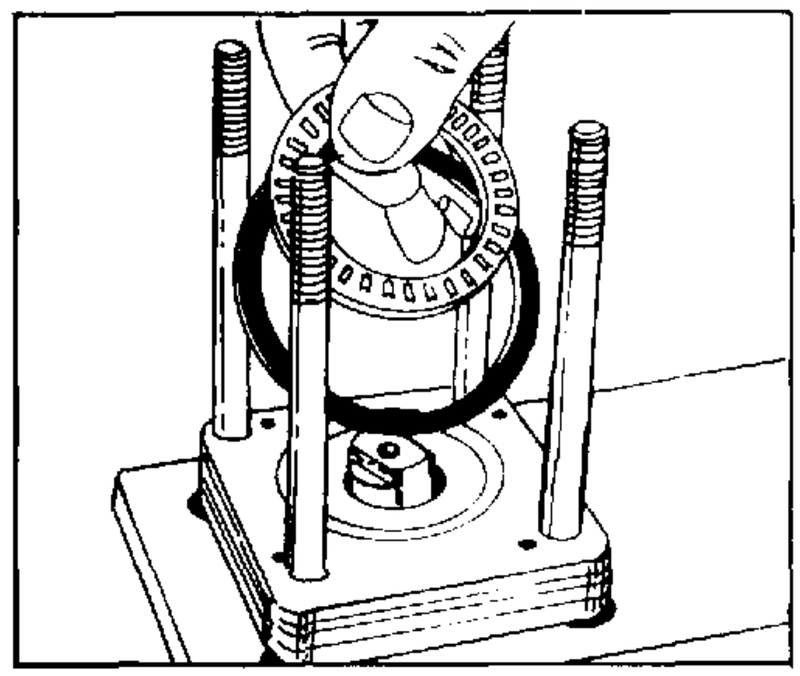

FIGURE 33.

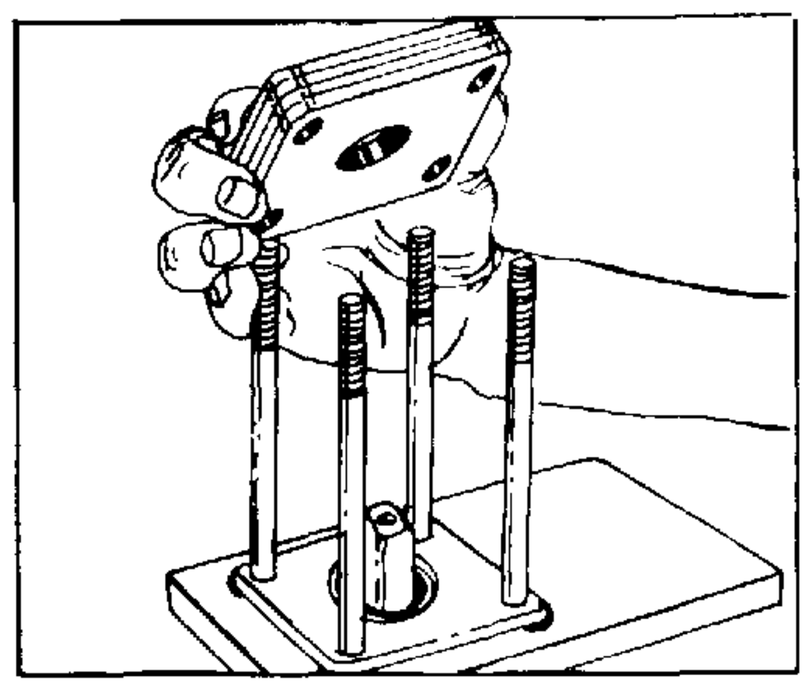

FIGURE 34.

FIGURE 35.

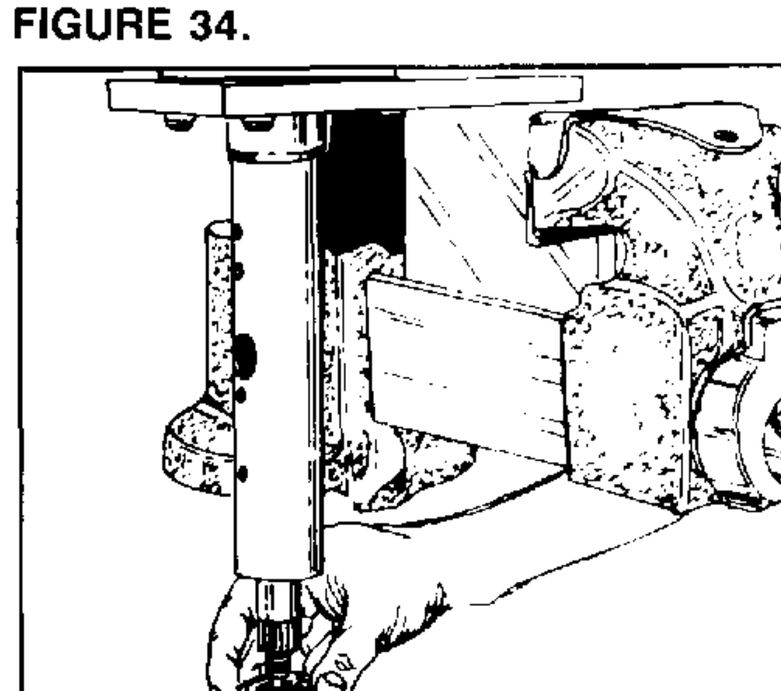

FIGURE 36.

inspect input shaft/wheel tube sub-assembly

45. Inspect the input shaft/wheel tube (33) and sub-assembly components as assembled. Inspect input shaft/wheel tube for worn or damaged serrations, wheel nut threads, bearing diameter, and flats on the lower end. Inspect the other components of the sub-assembly for wear damage. If the sub-assembly includes horn cable assembly(ies), check its electrical functions with an appropriate continuity checking device. If this sub-assembly passes inspection, set it aside, and go to disassembly procedure number 49. If it does not pass inspection, continue with disassembly procedure number 46.

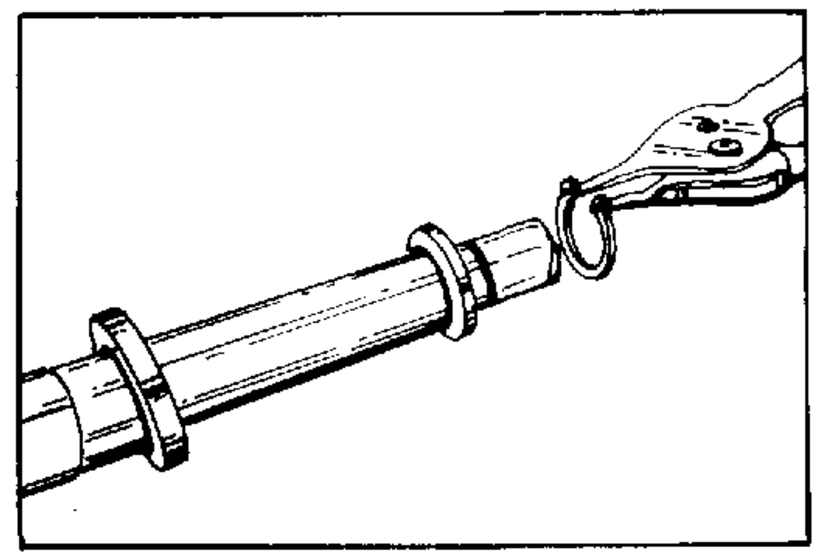

FIGURE 37.

NOTE

NOTE: There must be electrical continuity (connection) from the upper terminal of horn cable assembly (47) to the contact ring of the contact ring assembly (43). There must not be any electrical continuity (connection) from horn cable assembly terminal or contact ring assembly to the input shaft/wheel tube (33) or other components.

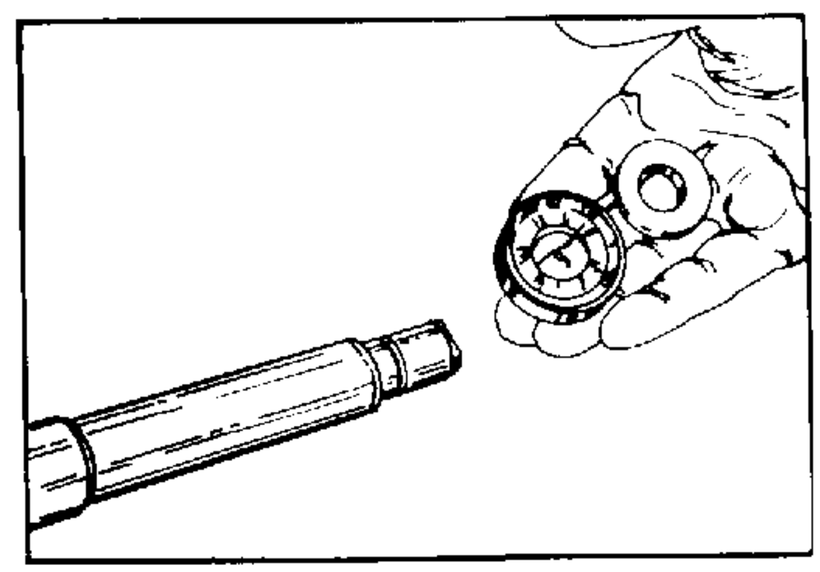

FIGURE 38.

remove retaining ring 46. Using appropriate external retaining ring pliers, remove the retaining ring (34) from the input shaft/wheel tube (33). See figure 37. Discard, if deformed or broken.

remove retaining plate

47. Remove washer (35) and retaining plate (36) from input shaft/wheel tube (33) or upper cover and jacket assembly (37). Discard, if deformed or damaged. See figure 38.

NOTE

NOTE: Retaining plate (36) cannot be serviced separately, but is a part of an upper cover and jacket tube assembly service kit as a matched set.

NOTE

NOTE: The relative positioning of the contact ring(s) (43) should be noted before removal for reassembly purposes.

remove upper cover and jacket tube assembly

48. Remove the upper cover and jacket tube assembly (37) and lay the assembly on the bench. See figure 39.

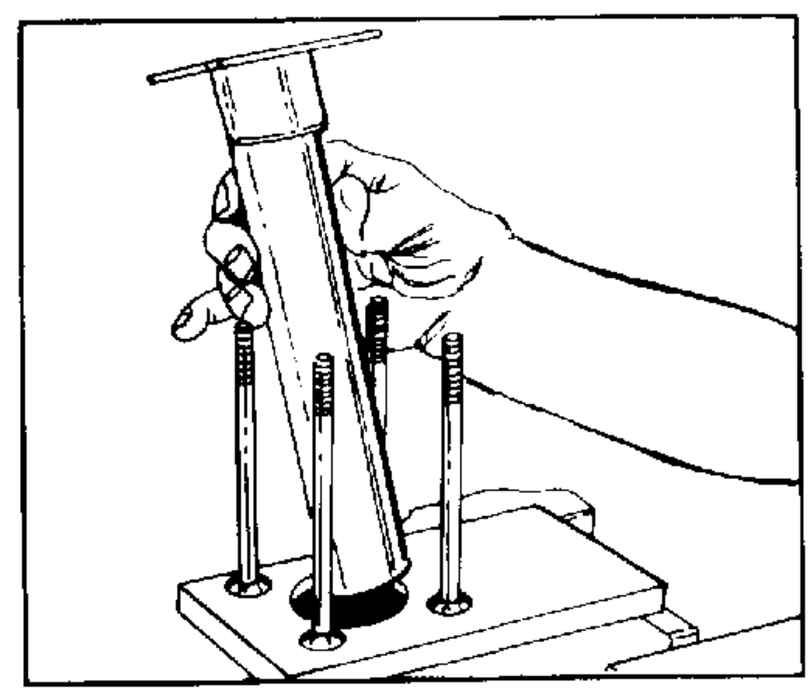

FIGURE 39.

inspect upper cover and jacket assembly

49. The jacket tube has been pressed into and welded to the upper cover plate support tube such that the retainer plate (36) is flush with the upper cover plate surface when seated against the jacket tube. Any signs of looseness or movement of jacket tube in the upper cover support tube will require replacement of upper cover and jacket assembly (37), retainer plate (36) and bushing (38) as a set. A loose or worn input shaft/wheel tube bushing (38) in the upper cover and jacket assembly can be serviced separately.

remove worn bushing 50. If the bushing (38) is to be replaced, place the upper cover and jacket tube assembly (37) in a vise with the vise jaws clamping firmly on the jacket tube without deforming the jacket tube. Using an appropriate type of pliers, "uncrimp" or relieve the two crimped areas on the bushing end of the jacket tube. Remove the bushing using a bearing or seal type puller and discard the bushing. Set the upper cover and jacket tube aside to await reassembly. See figures 40 and 41.

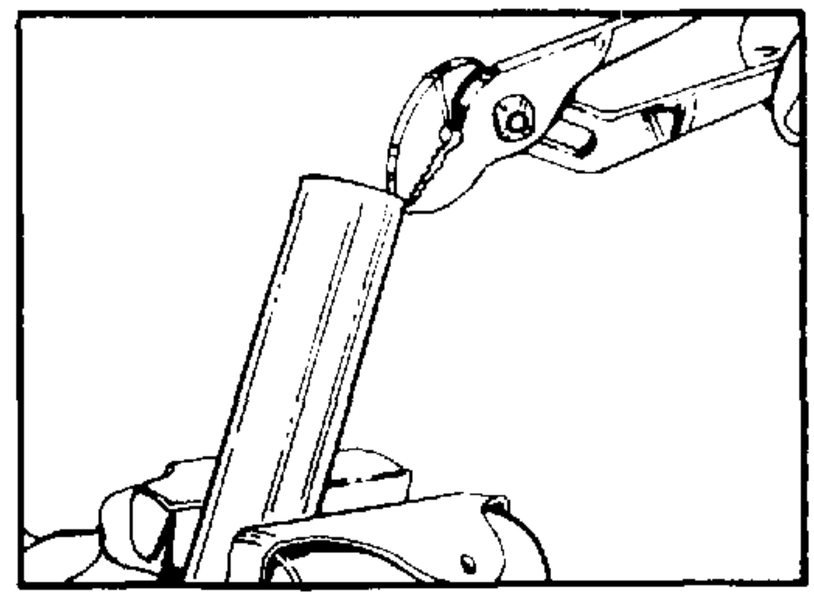

FIGURE 40.

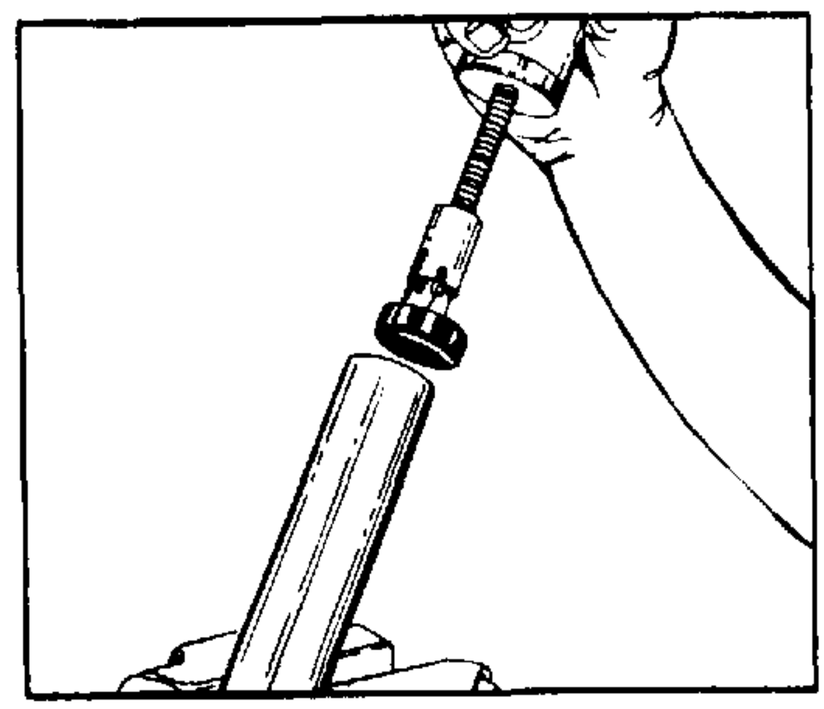

FIGURE 41.

remove and inspect bolts 51. Remove the nuts holding the four bolts (40) to the fixtures and remove the bolts. Bolts with the square shoulder or the threads damaged such that the nuts cannot be properly torqued must be replaced. See figure 42.

WARNING WARNING: USE ONLY GENUINE OEM APPROVED REPLACEMENT PARTS. THE USE OF IMPROPER PARTS COULD CAUSE A LOSS OF STEERING WHICH COULD LEAD TO AN ACCIDENT.

The disassembly is complete.

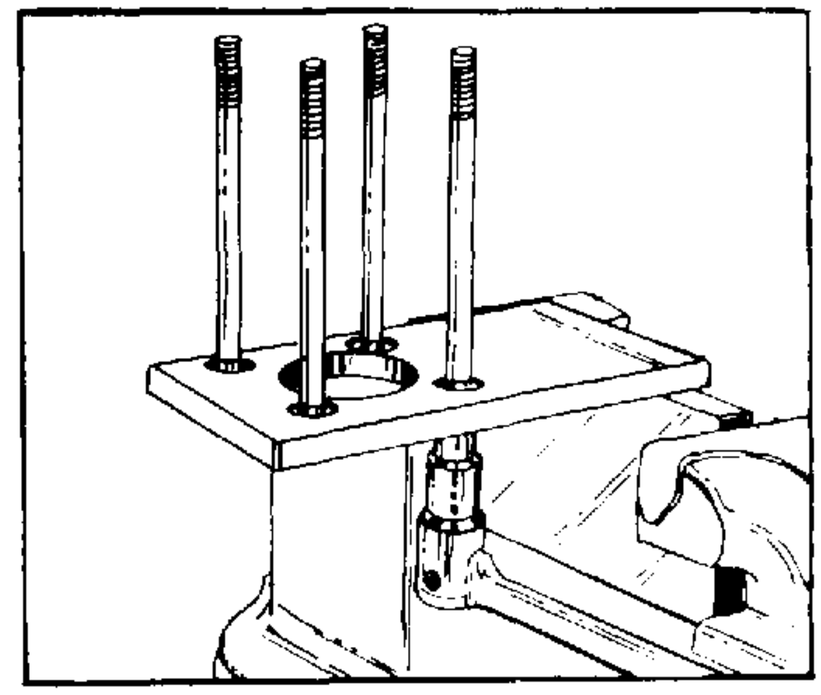

FIGURE 42.

Assembly

replace gaskets, seals and O-Rings

Replace all seals and O-rings with new ones each time you assemble the unit. Be sure the seal and O-rings remain seated correctly when components are assembled. See figure 43.

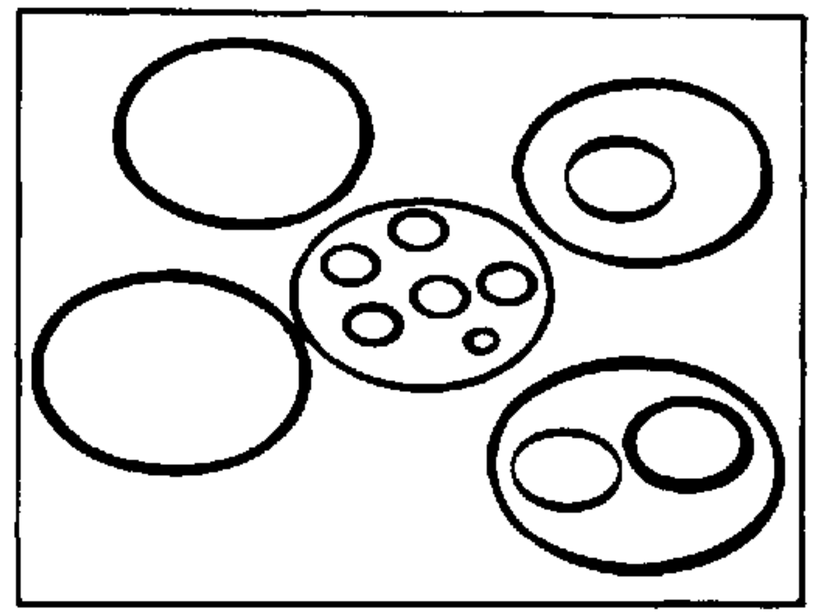

FIGURE 43.

NOTE

NOTE: A seal kit with all required seals except the column and jacket seal is available for service. The seal (39) is available separately.

clean and dry parts

Before you reassemble the unit, wash all parts in clean petroleum based solvent. Blow them dry with compressed air.

WARNING

WARNING: SINCE THEY ARE FLAMMABLE, BE EXTREMELY CAREFUL WHEN USING ANY SOLVENT. EVEN A SMALL EXPLOSION OR FIRE COULD CAUSE INJURY OR DEATH.

WARNING

WARNING: WEAR EYE PROTECTION AND BE SURE TO COMPLY WITH OSHA OR OTHER MAXIMUM AIR PRESSURE REQUIREMENTS.

place bolts into fixture

1. Place four bolts (40) into fixture with shortest threaded end of bolts through the fixture holes. Secure bolts to fixture with four 5/16-24 UNF nuts. Tighten nuts to secure assembly to fixture but loose enough to turn bolts and facilitate stacking of components. See figure 44.

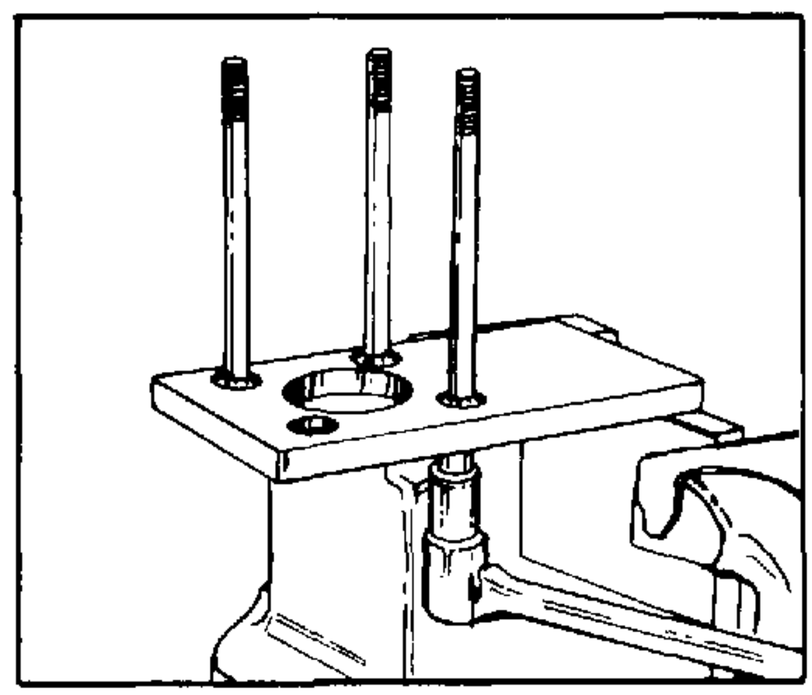

FIGURE 44.

assemble new bushing

2. If the bushing (38) was removed from the upper cover and jacket tube (37) for replacement, press a new bushing (38) into the upper end of the jacket tube with the end of the bushing that has recesses toward the jacket tube. This may be done using an arbor press or clamping on the jacket tube per disassembly step 52 and using the wood handle end of a hammer. The bushing must be seated firmly in the jacket tube and below the end of the jacket tube. "Crimp" the end of the jacket tube over the bushing in two places approximately 90° away from the original crimped areas, using pliers and/or a blunt ended punch. See figures 45 and 46.

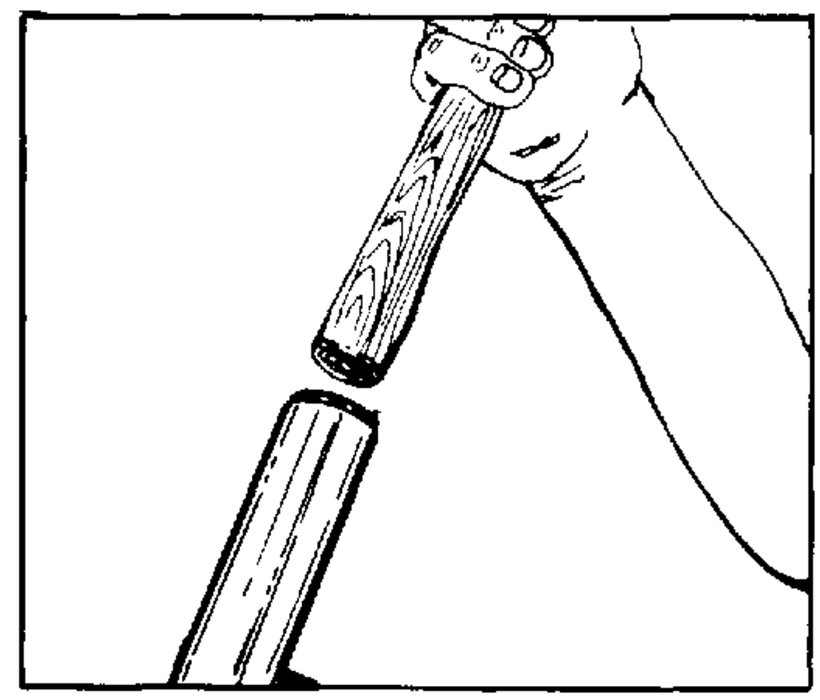

FIGURE 45.

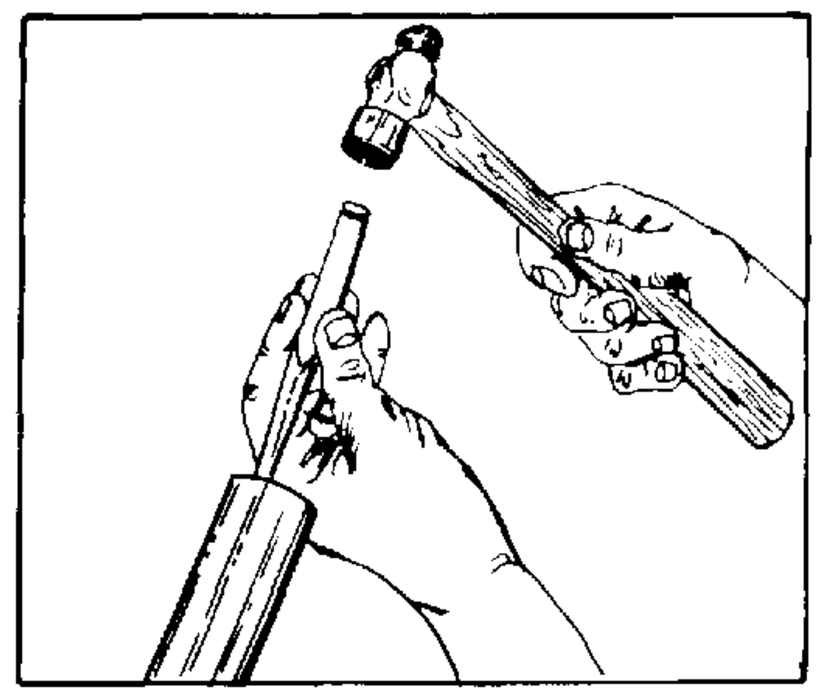

FIGURE 46.

stack upper cover and jacket tube assembly

3. Apply clean grease to bushing (38) and stack upper cover and jacket tube assembly (37) on the four bolts (40) with the jacket tube pointing down through the hole in the fixture. Make sure the square shoulder of the bolts engage the square holes in the upper cover. See figure 47.

NOTE

NOTE: If contact ring assemblies and horn wires are not required, go to assembly Step 6.

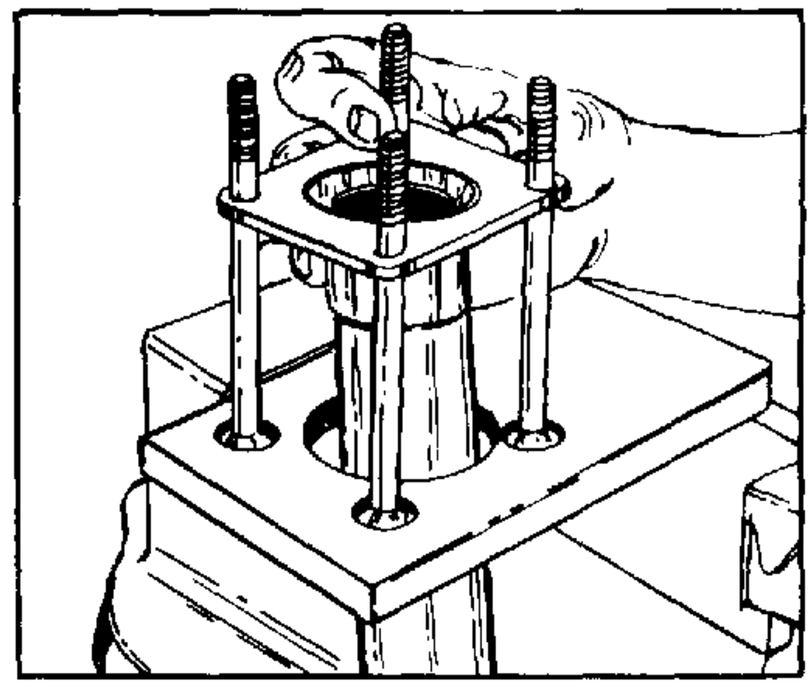

FIGURE 47.

install retaining plate and washer

4. Apply a small amount of grease to the recessed face of retainer plate (36) and to washer (35). If the input shaft/wheel tube (33) is 3/4 inch (19 mm) diameter with no contact ring assembly (43), place the retainer plate into the upper cover and jacket assembly (37) with recessed retainer face out. Place washer (35) against recessed face of retainer plate.

   If input shaft/wheel tube (33) is 7/8 inch (22 mm) diameter on the hand wheel end or has a contact ring assembly (43), slide the retainer plate (36) then the washer (35) onto the retaining ring groove end of the input shaft/wheel tube, past the ring groove. The recessed face of the retaining plate must be toward the washer. See figure 48.

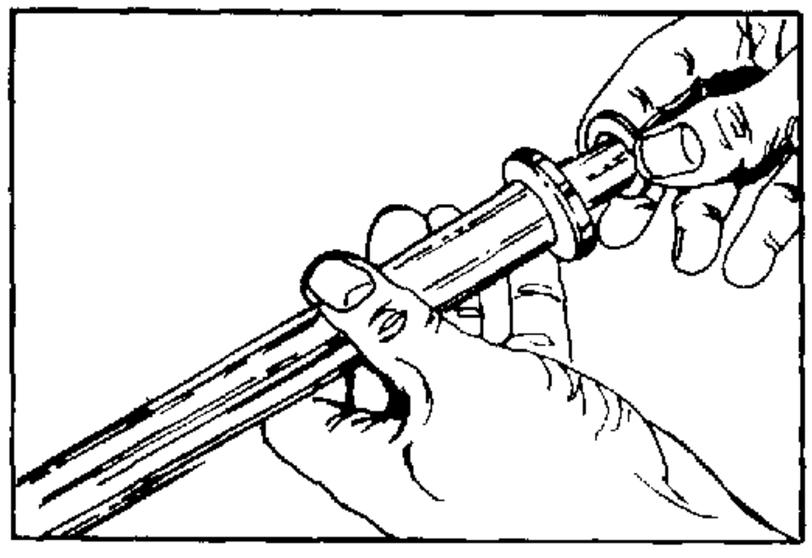

FIGURE 48.

install retaining ring

5. Install retaining ring (34) onto input shaft/wheel tube (33) using the appropriate external retaining ring pliers. See figure 49.

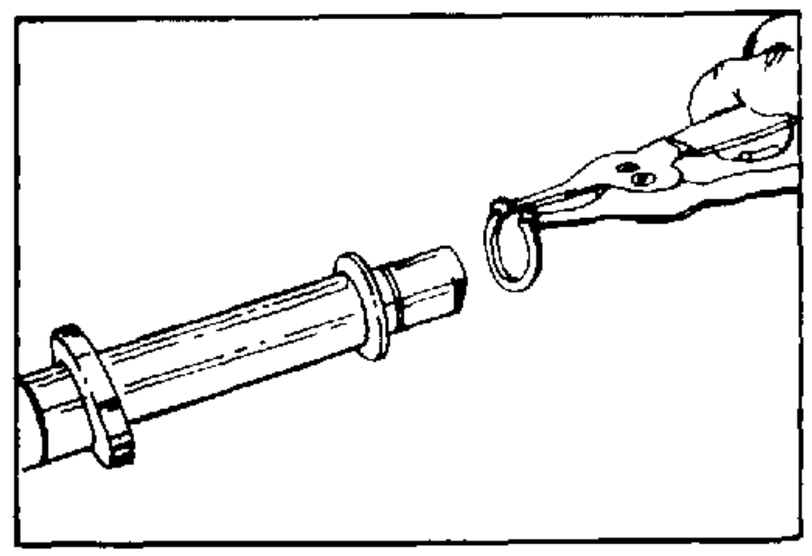

FIGURE 49.

install input shaft/wheel tube

6. Slide input shaft/wheel tube (33) assembly into upper cover end of upper cover and jacket tube assembly (37) and through the bushing (38) until the retaining ring (34) bottoms against washer (35) which bottoms against retainer plate's (36) recessed face and the retainer plate seats against the end of jacket tube. See figures 50 and 51.

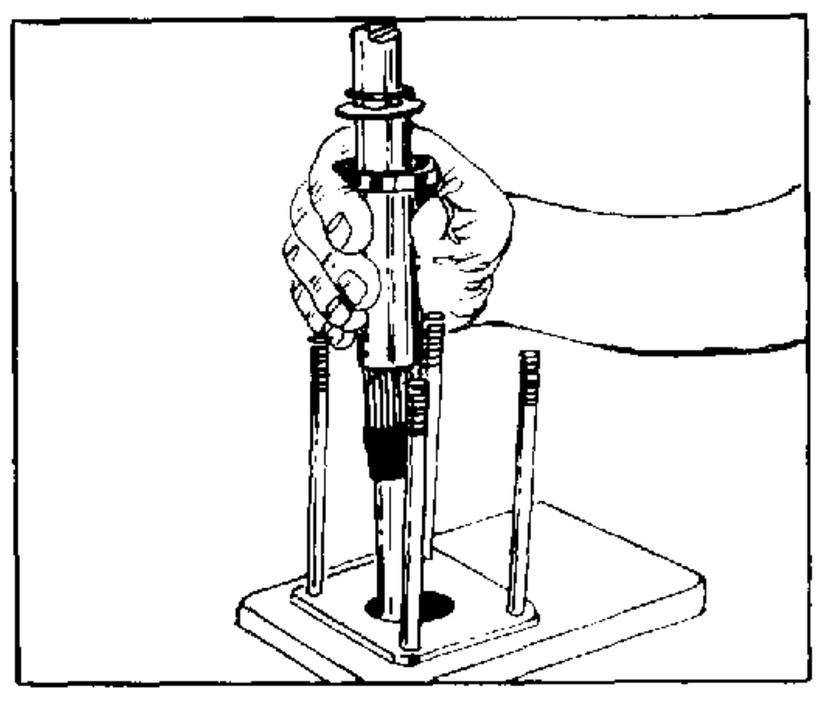

FIGURE 50.

install upper cover plate

7. Assemble the upper cover plate (32) over the four bolts (40) and input shaft/wheel tube (33) onto the upper cover and jacket tube assembly (37) with the highly polished surface up and the edge with the alignment groove in the same position relative to the jacket tube contact brush cover hole as noted before disassembly. See figure 51. (Reference alignment groove graphic.)

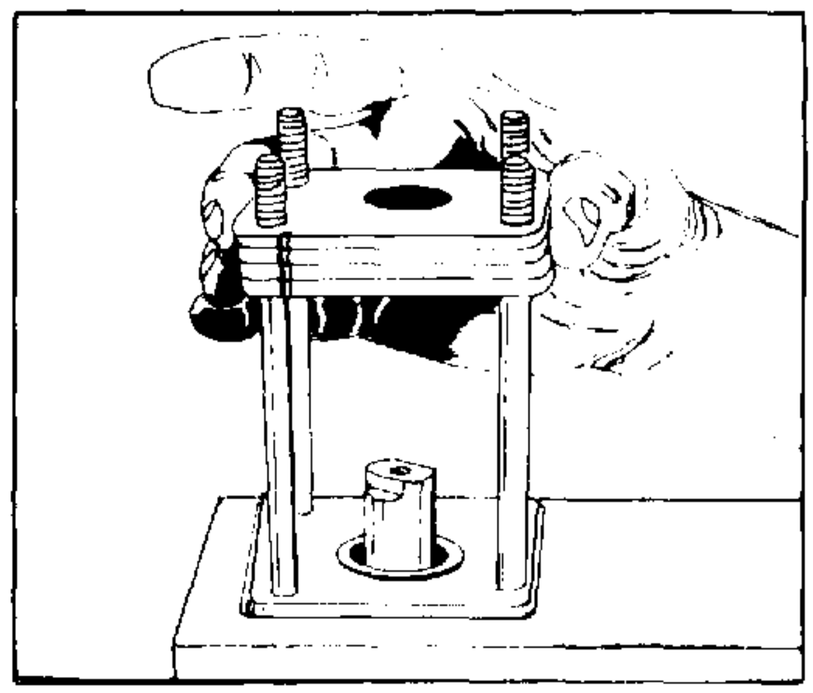

FIGURE 51.

grease upper cover plate face

8. Apply clean grease to the face of the upper cover plate (32), to the drive plate end of the input shaft/wheel tube (33) and to the face seal (29). See figure 52.

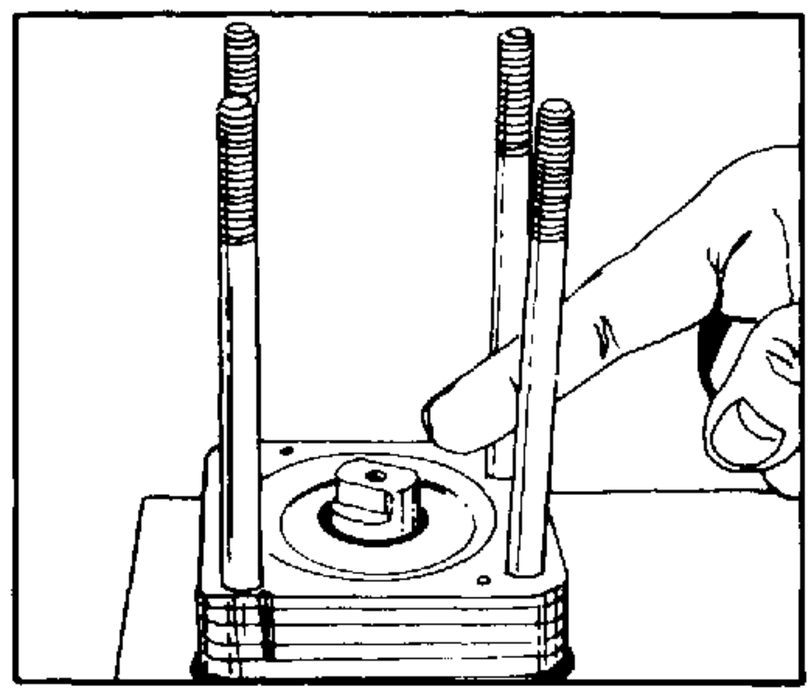

FIGURE 52.

assemble seal spacer, seal ring and seal

9. Assemble seal back-up ring (30) and face seal (29) onto the seal spacer (31). See figure 53.

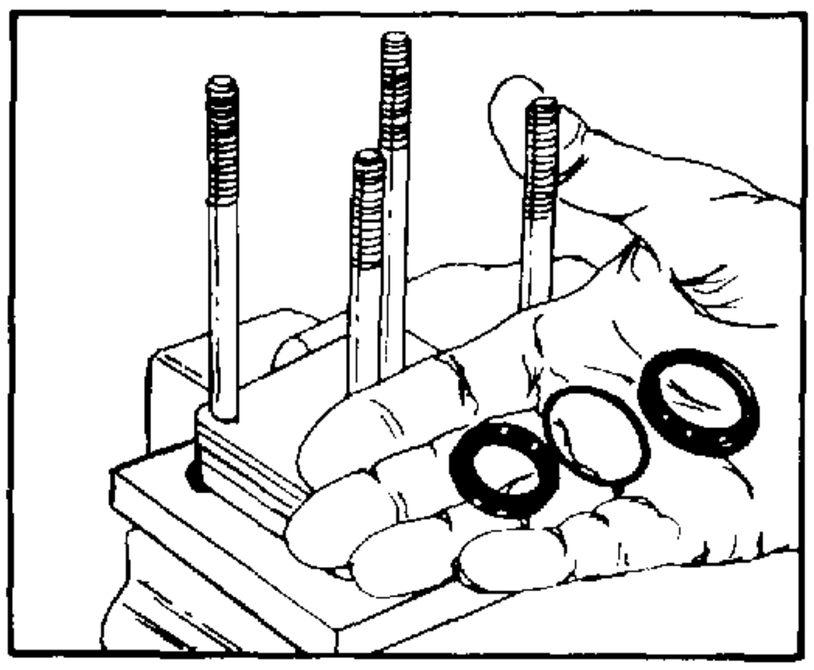

FIGURE 53.

install seal, seal back-up and spacer

10. Install face seal (29), back-up ring (30), and spacer (31) assembly over end of input shaft/wheel tube (33) onto upper cover plate (32). See figure 54.

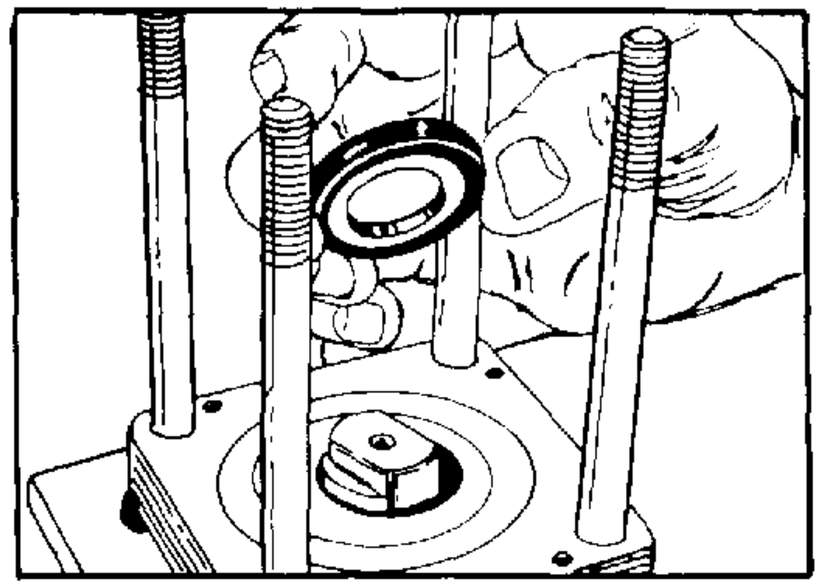

FIGURE 54.

assemble metering package

11. Place the drive plate (26) on a clean lint-free surface with the eleven tapped holes facing up. Place the rotor set (24, 25) on top of the drive plate with the five pin holes facing up. Rotate the stator (25) until the eleven hex socket head screw relief slots are aligned with the tapped holes in the drive plate. See figure 55.

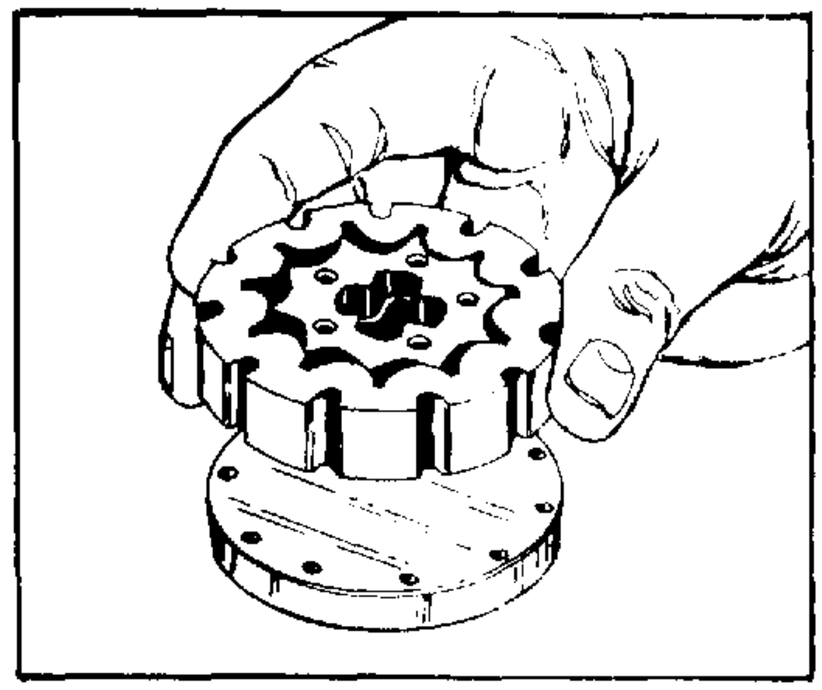

FIGURE 55.

install spacer

12. Apply a small amount of clean grease to spacer (23) and insert it into the drive slot in the rotor (24). See figure 56. The grease will aid in retaining the spacer during other assembly procedures.

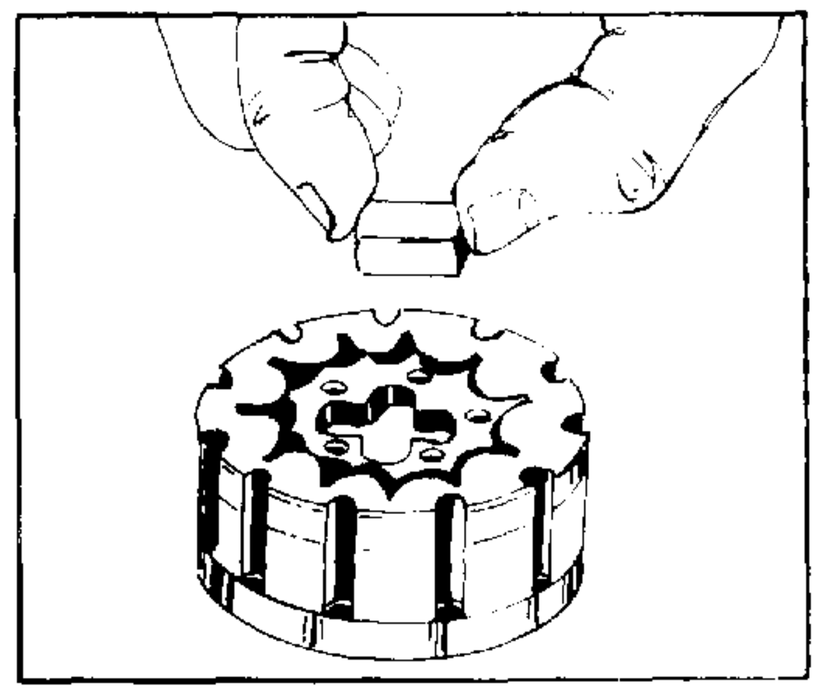

FIGURE 56.

install commutator

13. Place the commutator (22) on top of the rotor (24). Be sure the correct surface, shown in figure 57, is towards the rotor. Align the five holes and press the five alignment pins (11) in place. See figure 58.

CAUTION

CAUTION: Make sure the five alignment pins are pressed below the surface of the commutator (22).

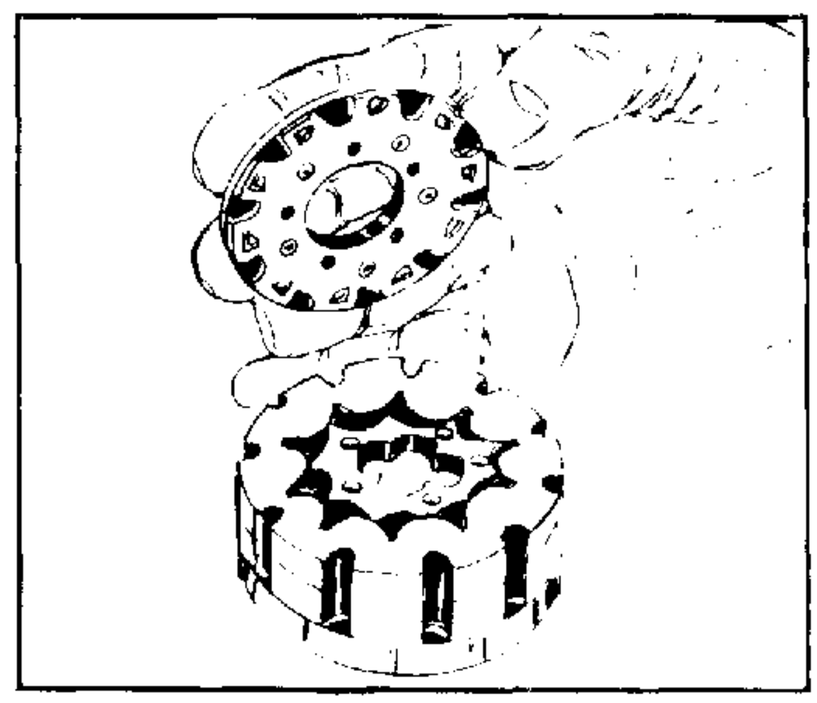

FIGURE 57.

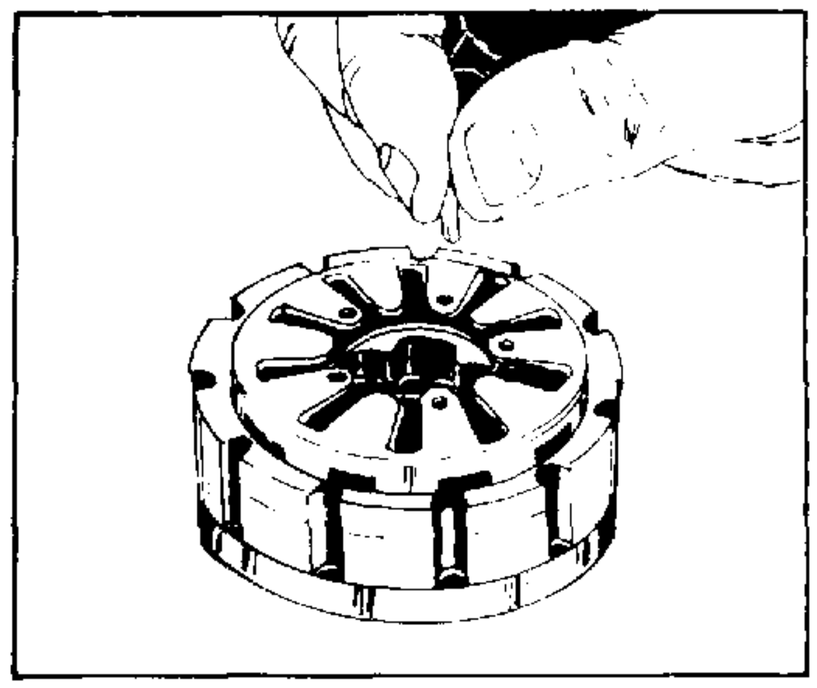

FIGURE 58.

lubricate the commutator

14. Place a few drops of oil into each recess in the commutator (22). See figure 59.

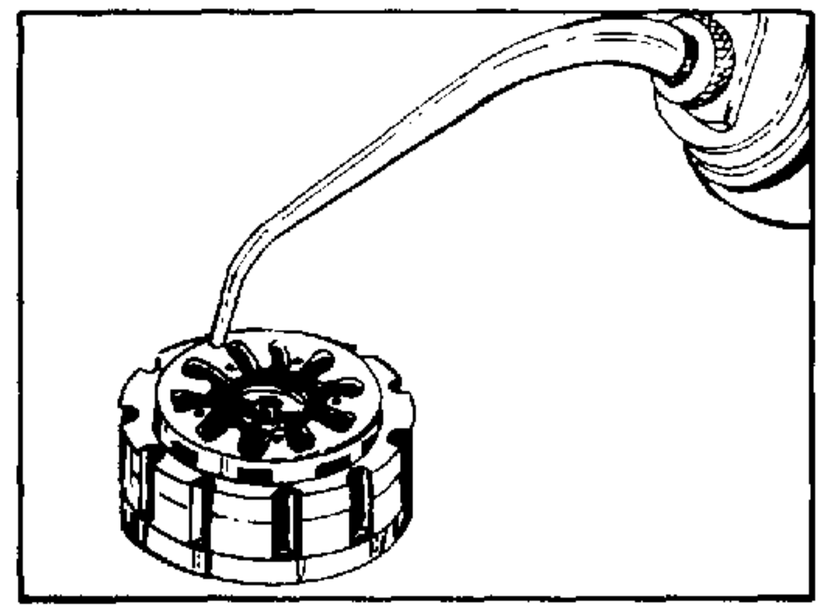

FIGURE 59.

install commutator ring

15. Place commutator ring (21) either side up on top of stator (25). Align commutator ring screw recesses with stator screw slots. See figure 60.

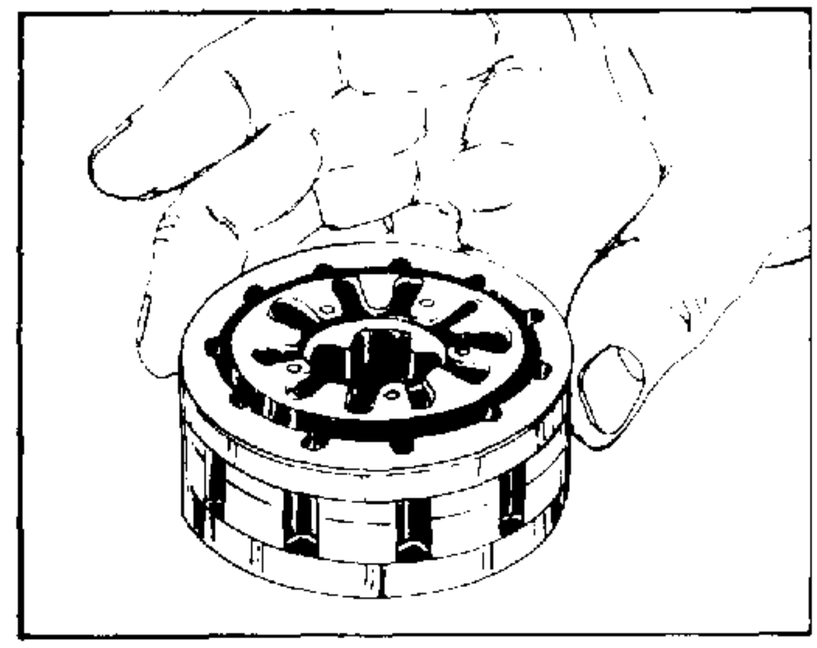

FIGURE 60.

install commutator cover

16. Place commutator cover (20) on top of commutator ring (21) with flat surface towards commutator. Align screw holes in cover, with screw holes in drive plate (26). See figure 61.

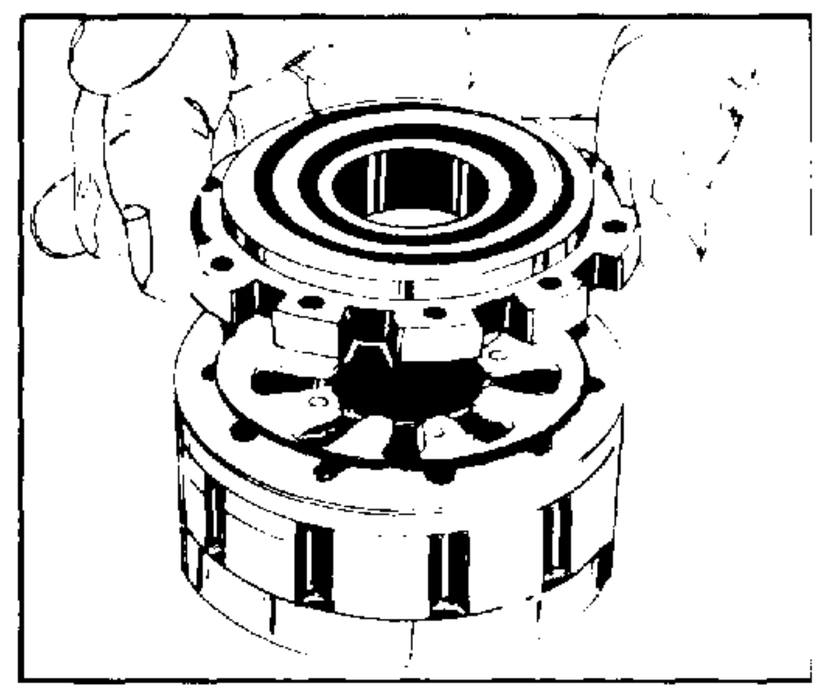

FIGURE 61.

install cap screws

17. Screw the eleven hex socket head cap screws (18) loosely into metering package. See figure 62.

NOTE

NOTE: The commutator ring (21) must be concentric with drive plate (26) within .005 inch (.127 mm) total indicator reading after tightening the eleven hex socket head cap screws (18). The next two procedures are a method of achieving the concentricity.

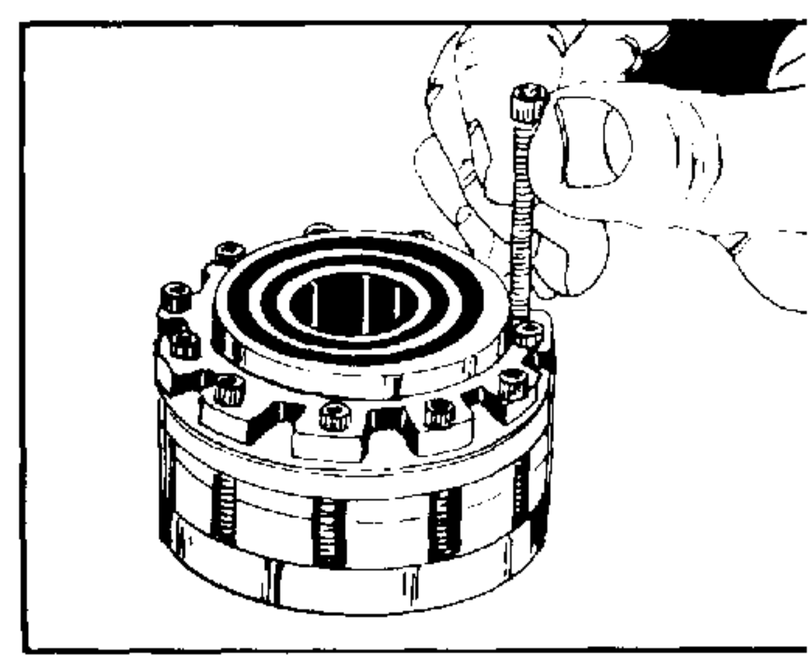

FIGURE 62.

align commutator ring concentrically with drive plate

18. Place the metering ring (17) on a hard flat surface. Place the assembled metering package into the metering ring with the commutator cover (20) down, such that the drive plate is partially out of the metering ring. (A suitable wood block under the metering package will hold it in this position.) See figure 63.

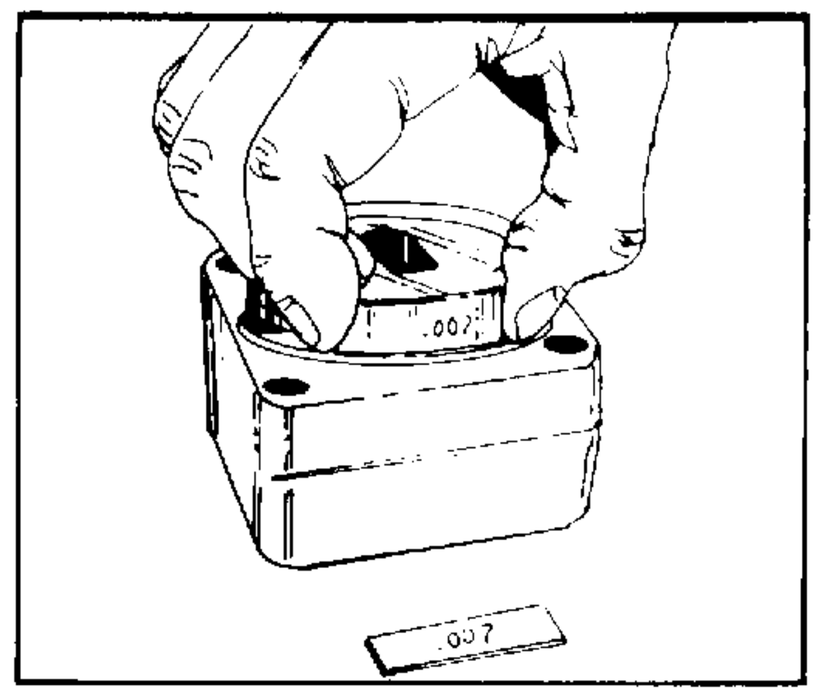

FIGURE 63.

Place one piece of .007 inch (.18 mm) shim stock approximately .5 inch (13 mm) wide x 1.5 inch (38 mm) long between the metering ring and drive plate inthree places approximately equal distance around the outside diameter of the drive plate. Place another piece of the .007 inch (.18 mm) shim stock between the drive plate and each of the three pieces of shim stock already in place. Lift the metering ring and metering package and remove the wood block. Push the metering package and shims into the metering ring until the drive plate and shims are at least flush with the metering ring. See figure 64.

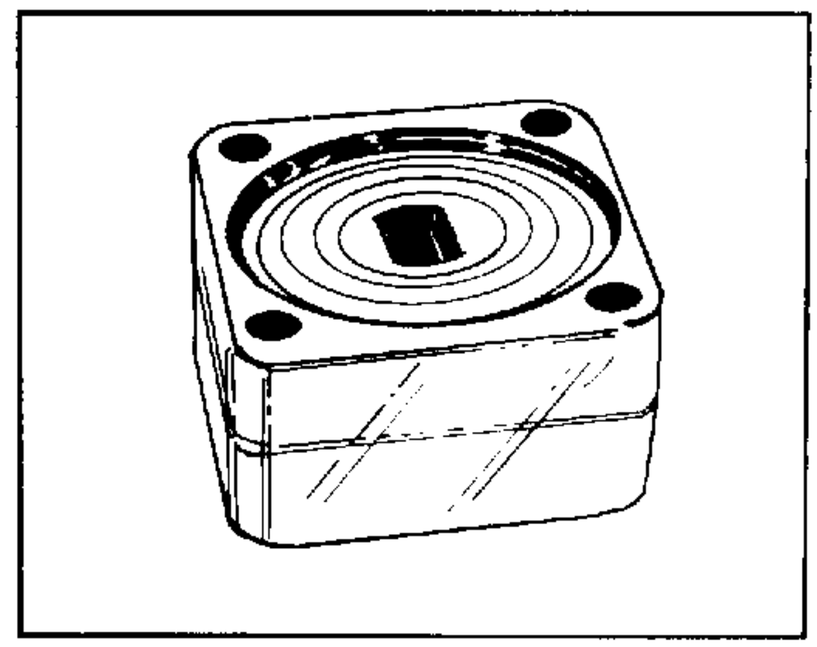

FIGURE 64.

tighten hex socket head cap screws

19. Reverse the metering ring (17) and metering package as a unit on the flat surface. Push down on the metering package until the drive plate is on the flat surface. Be sure the cap screws (18) are loose enough to allow the commutator ring (21) and drive plate (26) to align themselves concentrically in the metering ring bore. Gradually tighten the eleven cap screws, following the sequence shown in figure 66, at least twice until a final torque of 11-13 inch pounds (1.24 to 1.47 N m) is reached. See figures 65 and 66. Remove the metering package and shims from the metering ring. Discard the shims.

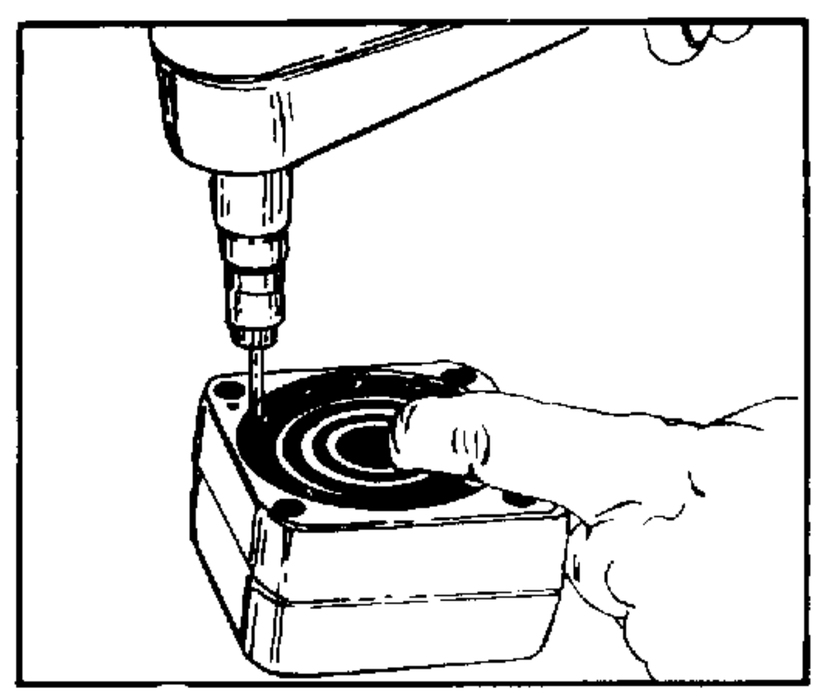

FIGURE 65.

WARNING

WARNING: USE CARE AND EYE PROTECTION WHILE ADDING AND REMOVING SHIMS FROM METERING RING AS THE SHIMS WILL BE UNDER SPRING TENSION AND COULD FLY INTO THE AIR CAUSING INJURY.

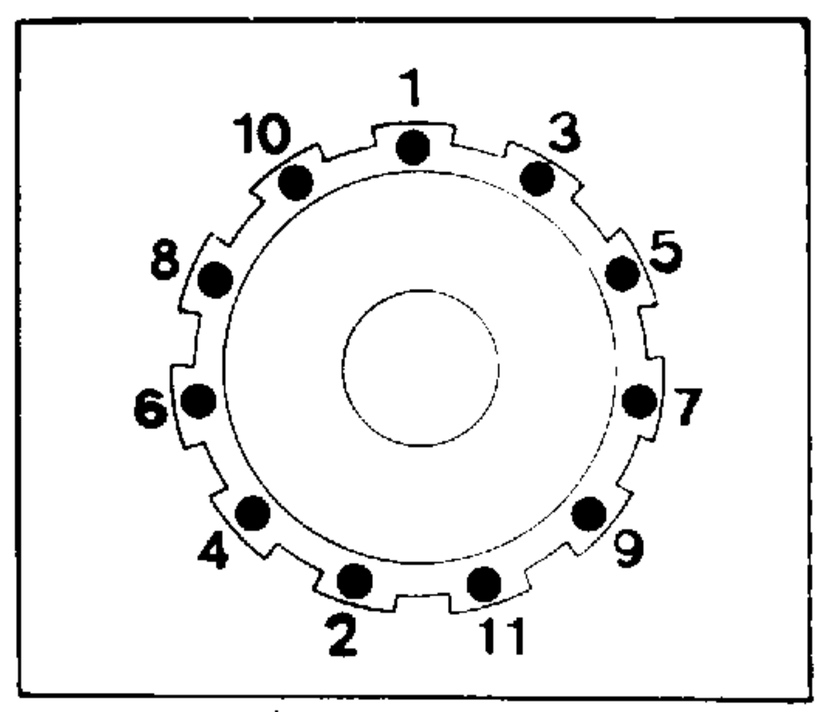

FIGURE 66.

install drive link 20. Insert large tang of the drive link (16) into the slot in the rotor (24). See figure 67.

CAUTION CAUTION: An incorrect (reversed) assembly of the drive link will prohibit the assembly of the hex drive (10) in step 35.

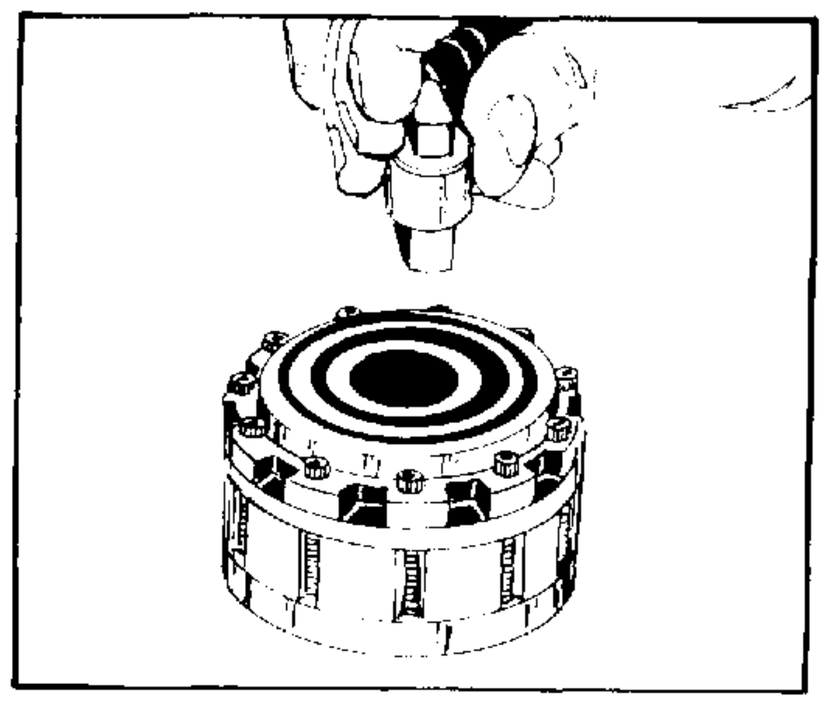

FIGURE 67.

check rotor movement 21. Grasp the drive link (16) and rotate the metering package by hand to make sure the parts do not bind. The rotor (24) should orbit inside the stator (25). If they bind, disassemble the metering package, correct the cause, and repeat the assembly and concentricity procedures. See figure 68.

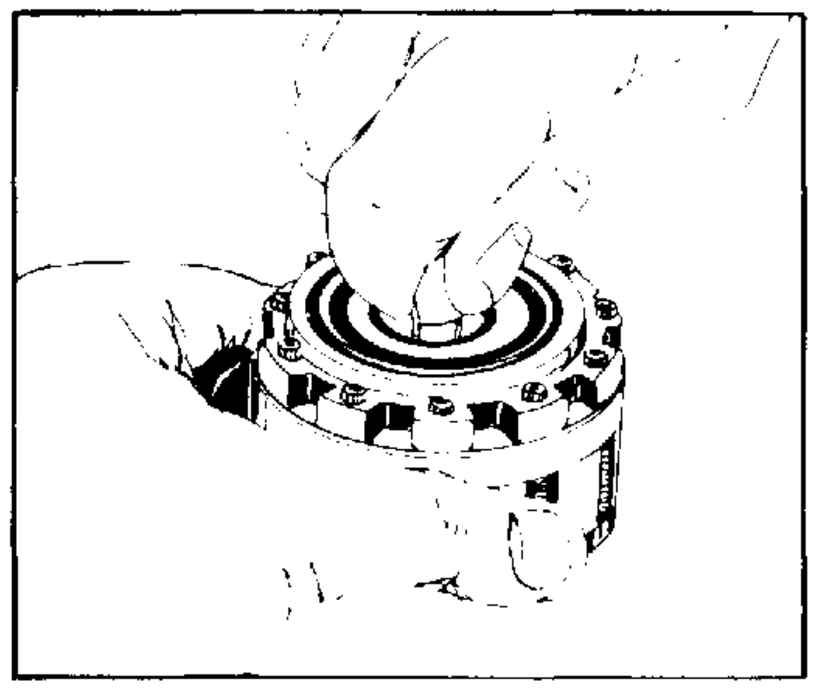

FIGURE 68.

install metering ring 22. Apply clean grease to the metering ring seal ring (3). Position the seal ring in the metering ring seal groove opposite to the end with the alignment pin holes. Stack the metering ring (17) into place, over the four bolts (40), with the seal ring towards the upper cover plate (32), and an alignment pin hole on the metering ring in line with and on the same side as the alignment groove on the side of the upper cover plate. See figure 69. This is required so that the other components can be aligned correctly.

CAUTION CAUTION: Be sure the seal ring (3) does not slip from position.

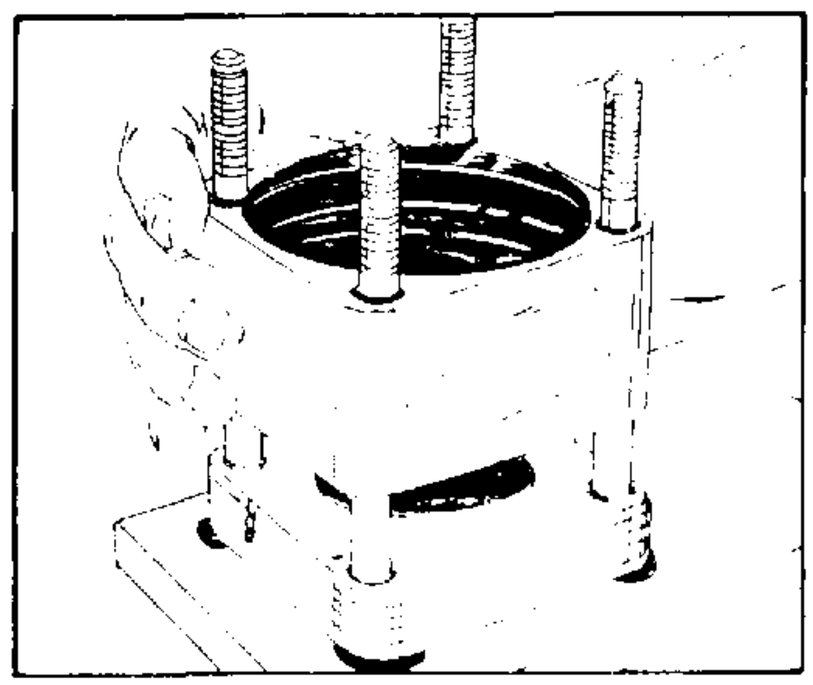

FIGURE 69.

install bearing spacer 23. Place the bearing spacer (27) onto the face of the upper cover plate (32). See figure 70.

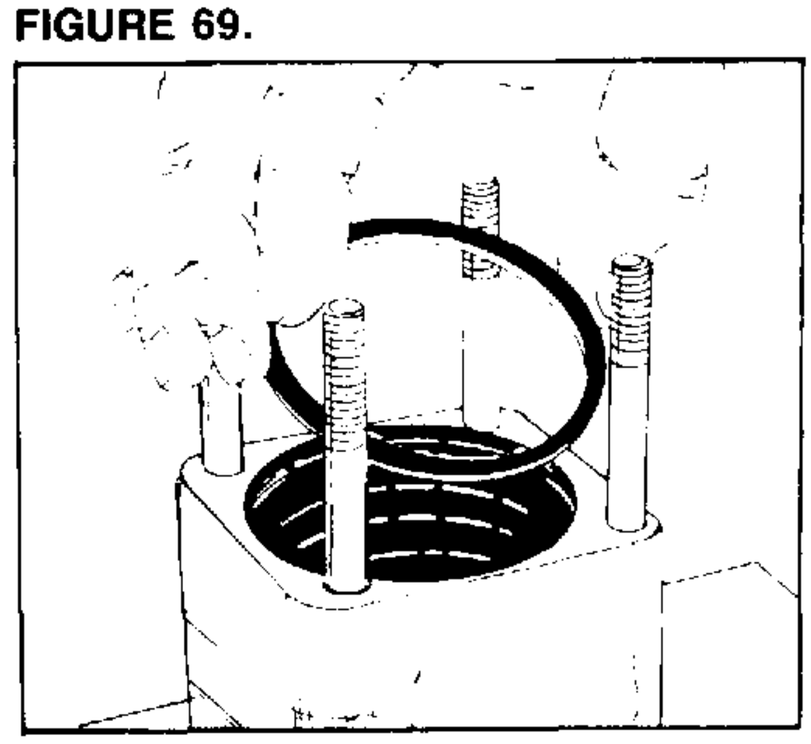

FIGURE 70.

install bearing

24. Lightly grease roller thrust bearing (28), and place it on the upper cover plate (32), inside the bearing spacer (27). See figure 71.

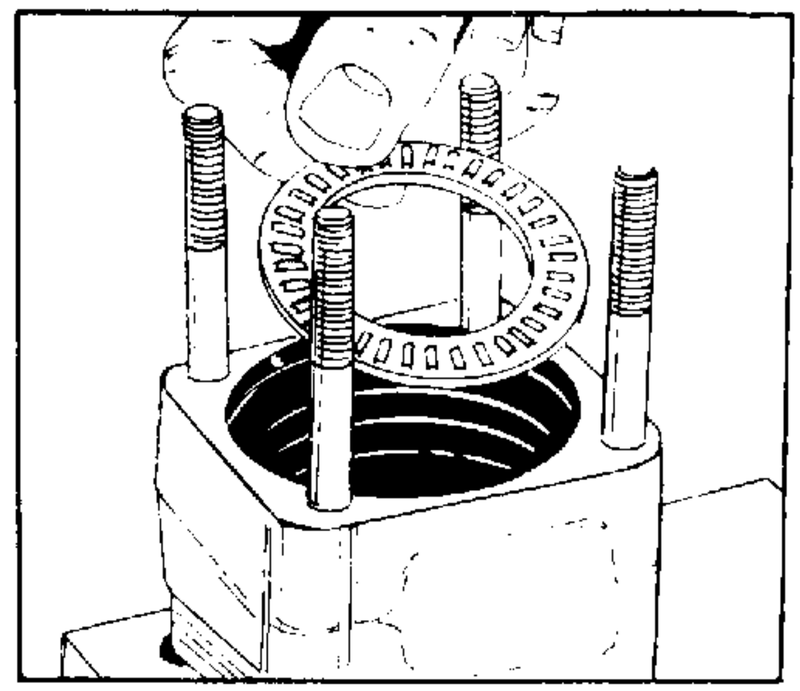

FIGURE 71.

install metering package

25. Inspect the exposed face of the drive plate (26) making sure it is clean and lint free. Apply a small amount of clean grease on the drive plate. Place the "metering package," drive plate side first, into the metering ring (17). Revolve the input shaft (33) or metering package until the hole in the drive plate (26) engages the end of the input shaft and the drive plate is seated on the thrust bearing (28). When properly seated, the metering package will be below the surface of the metering ring. See figures 72 and 73.

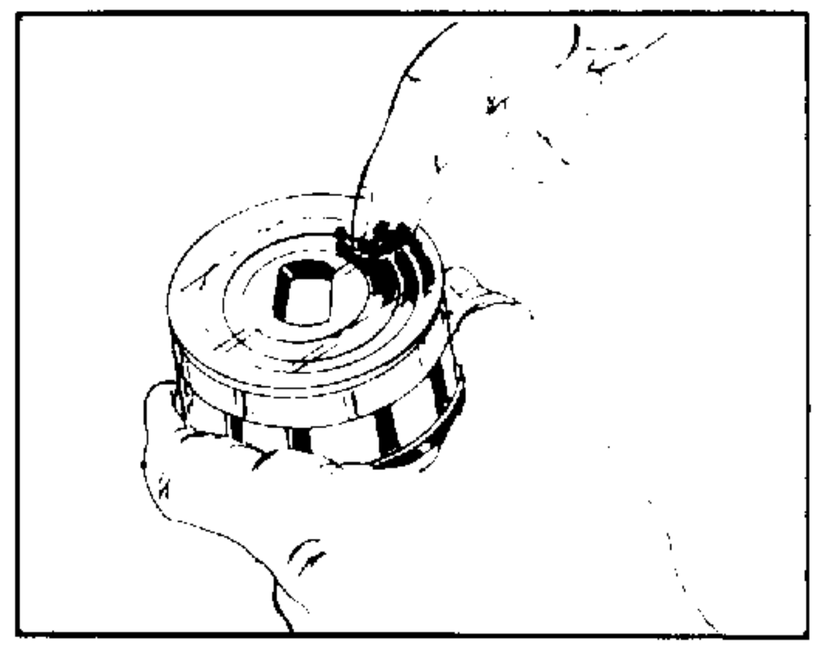

FIGURE 72.

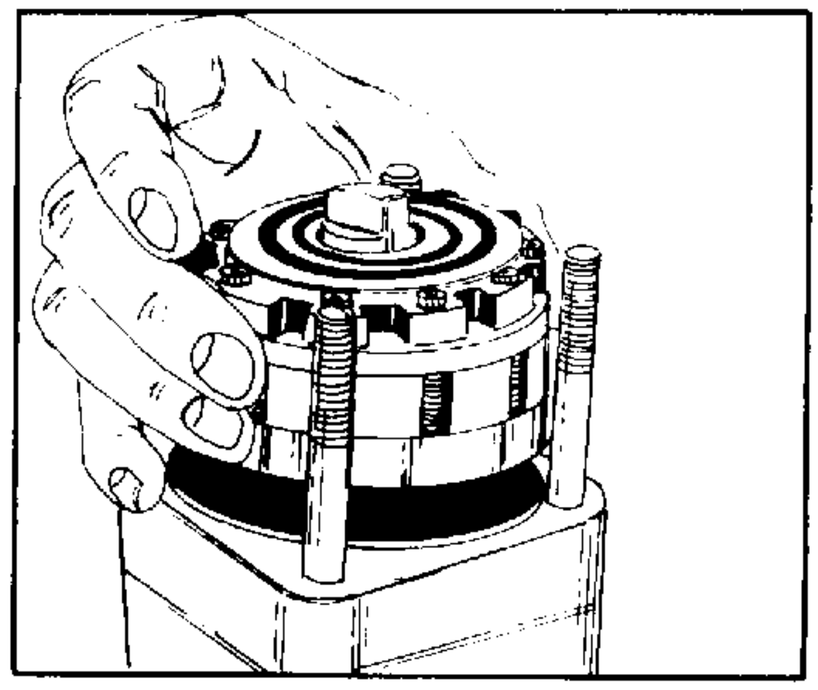

FIGURE 73.

install commutator seal

26. Grease the new commutator seal (19) and place it into the commutator cover (20) seal groove. The rubber portion (the softer side) of the seal with the yellow mark must be placed into the seal groove. See figure 74.

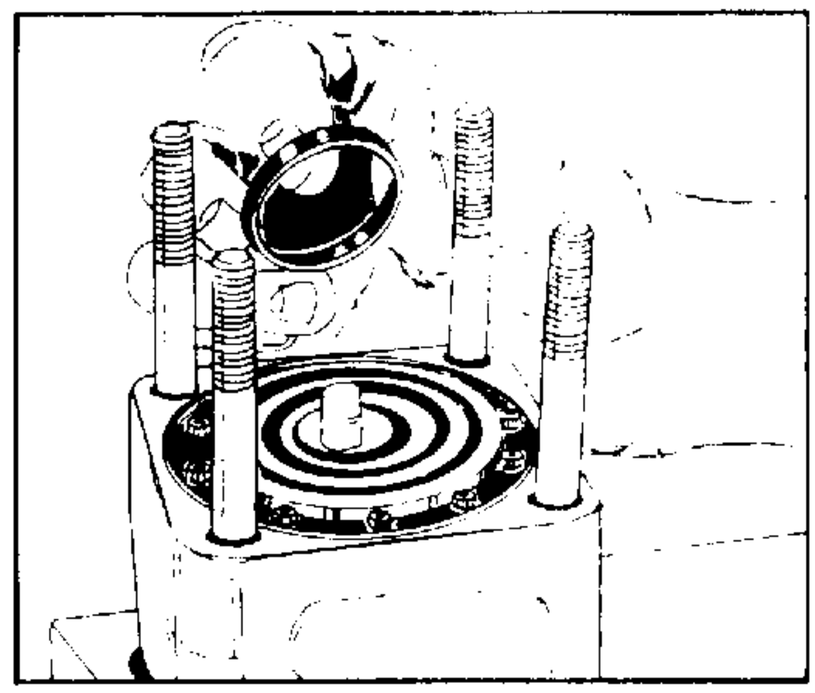

FIGURE 74.

install metering ring seal ring

27. Apply clean grease to the metering ring seal ring (3). Place the seal ring into the metering ring seal ring groove. See figure 75.

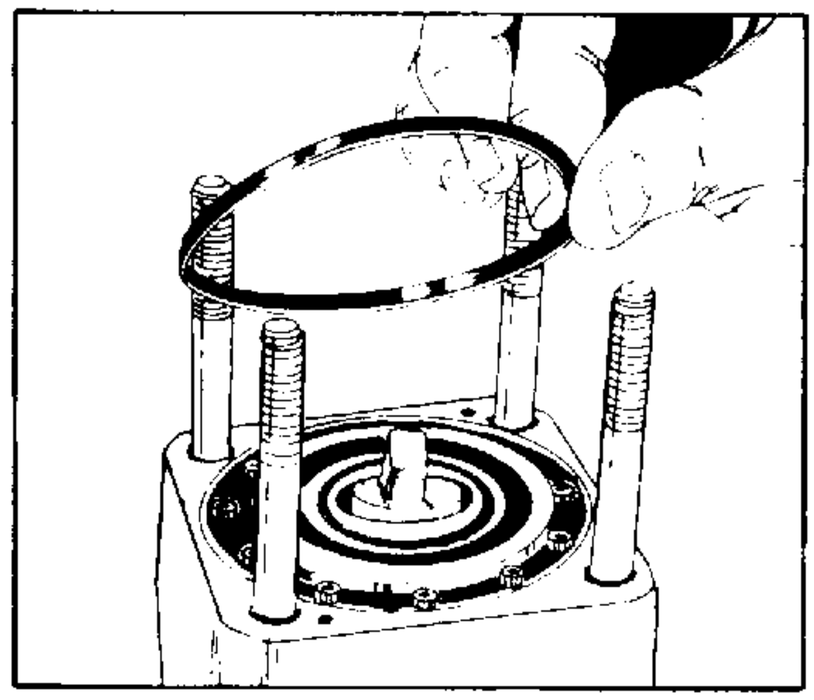

FIGURE 75.

install alignment pins

28. Place two alignment pins (11) into the metering ring (17). See figure 76.

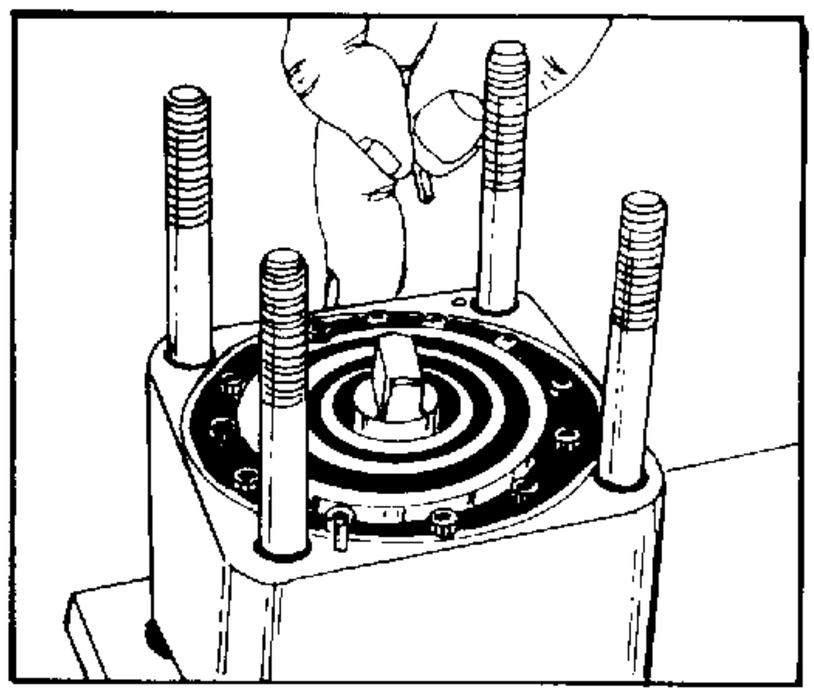

FIGURE 76.

install isolation manifold

29. Stack the isolation manifold (15) (4 plates bonded together) onto the metering ring (17), aligning the grooves on the side of the manifold with the grooves on the side of the upper cover plate (32) and the alignment pin holes with the alignment pins in the metering ring. The isolation manifold surface without the recessed slots must be placed toward the metering ring. See figure 77.

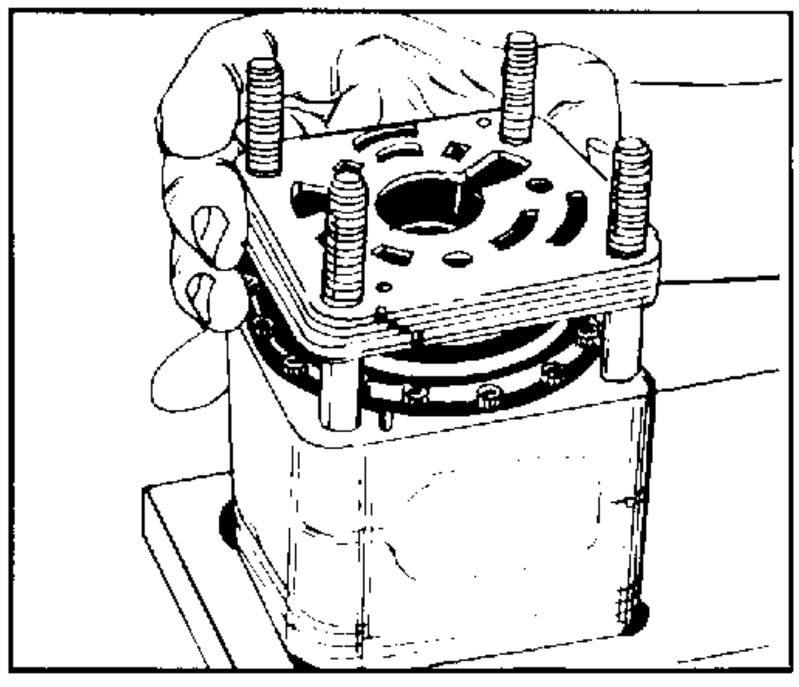

FIGURE 77.

install two alignment pins

30. Install two alignment pins (11) into the isolation manifold (15). See figure 78.

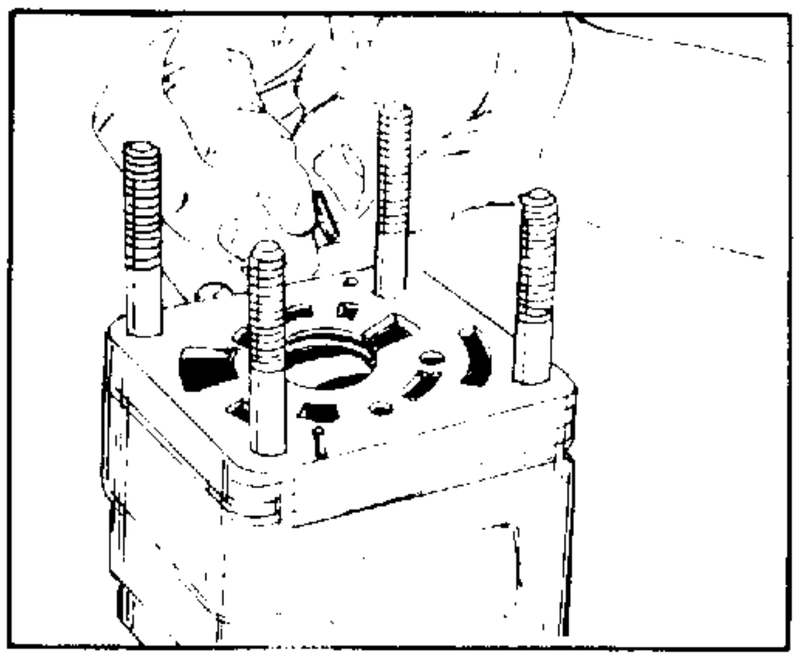

FIGURE 78.

install 1/2 inch springs

31. Place the three 1/2 inch (13 mm) springs (14) into the spring pockets of the isolation manifold (15). See figure 79.

NOTE

NOTE: Two different length springs are used in the unit. Be sure to use the 1/2 inch (13 mm) length springs (14) during this part of the assembly.

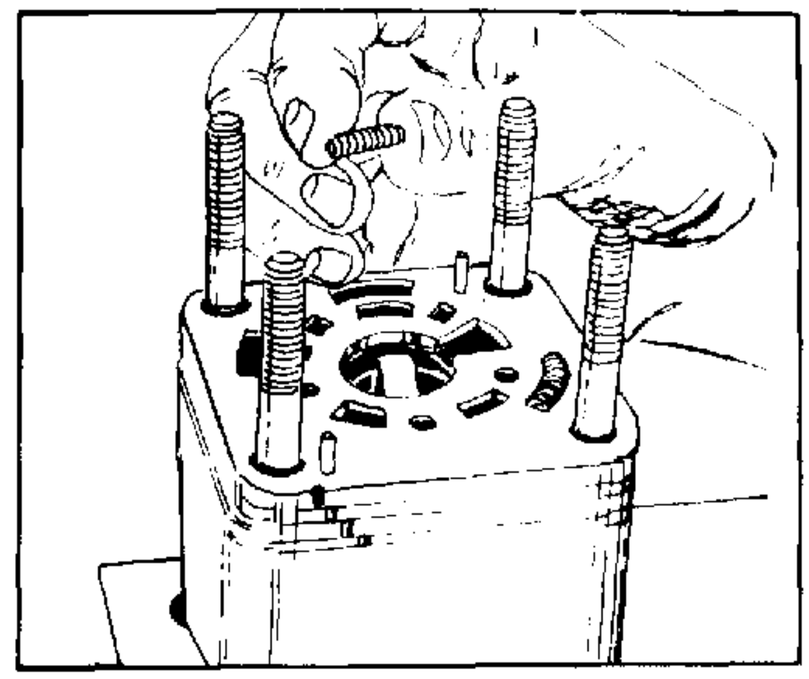

FIGURE 79.

install valve ring

32. Apply clean grease to a seal ring (3) and place it in the valve ring (12) recess that will face down when installed. Install the valve ring over the bolts and alignment pins with seal ring facing the isolation manifold (15). See figure 80.

CAUTION

CAUTION: Be sure seal ring is seated correctly after valve ring is assembled.

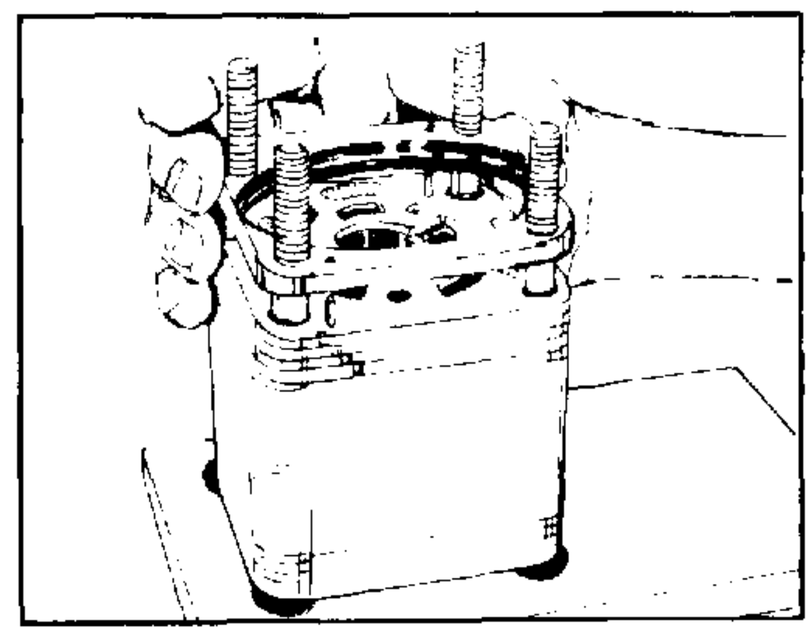

FIGURE 80.

install hex drive assembly

33. Place hex drive assembly (10), pin side up, through the hole in the isolation manifold (15). The slot in the hex drive must be engaged with the small tang of the drive link (16). Turn the input shaft/wheel tube to assist the engagement. See figure 81.

NOTE

NOTE: If hex drive does not readily assemble on drive link see CAUTION note after assembly step 22.

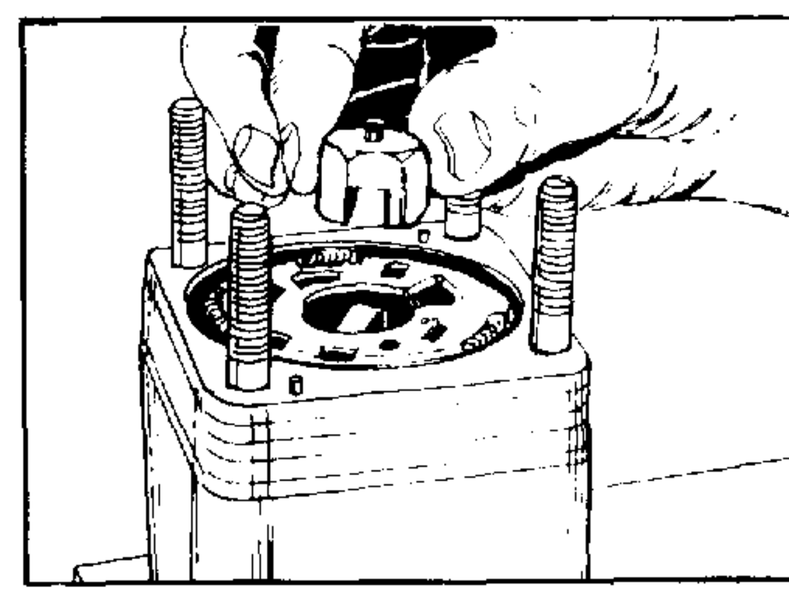

FIGURE 81.

install valve plate

34. To install the valve plate (13) correctly, first carefully study figures 82 and 83 for positioning of the valve plate (13) spring slots and its other cavities in relation to the spring and spring recesses on the isolation manifold (15). Be sure to use the alignment grooves on the side of the isolation manifold for orientation.

Place the valve plate (13) with the surface that reads "shaft side" down over the hex drive assembly (10), aligning the three spring slots centrally over the three springs placed in the spring recesses of the isolation manifold (15). The valve plate spring slot with the small cavity and then the words "port side" centrally below it as pointed to in figure 82, must be placed over the spring and spring recess in the isolation manifold at the top (at 12 o'clock) as shown in figures 82 and 83. Adjust the valve plate position radially to centralize the spring slots over the springs and the spring recesses in the isolation manifold.

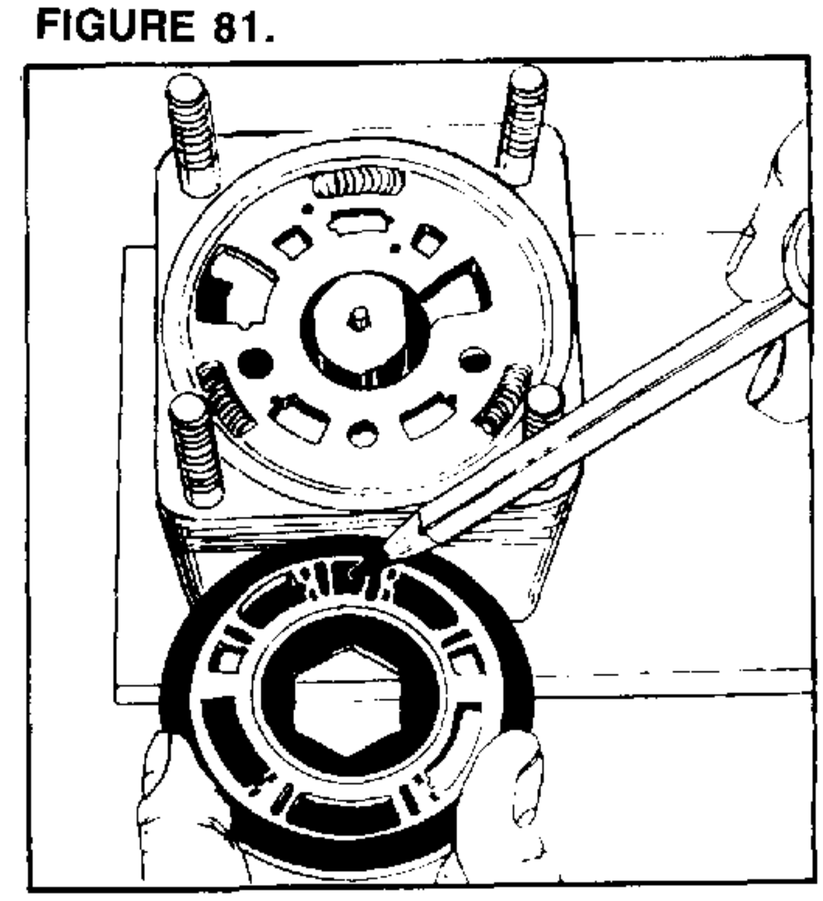

FIGURE 82.

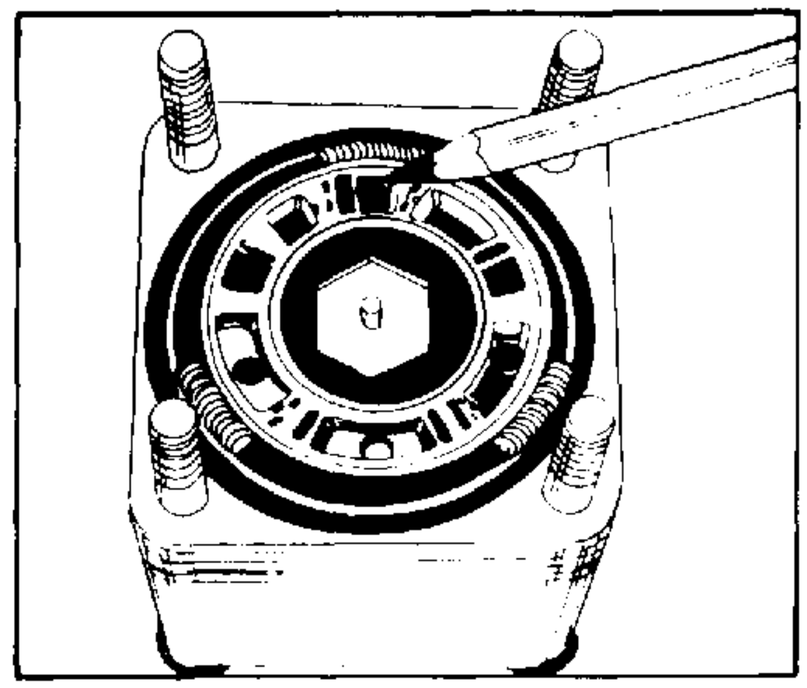

FIGURE 83.

CAUTION

CAUTION: The unit will not function if the valve plate is not positioned on the isolation manifold exactly as shown in figure 83. If the valve plate spring slots, isolation manifold spring recesses and springs are not centrally aligned in this step, the springs could be damaged when the port manifold is placed on the assembly.

install valve ring seal ring

35. Apply clean grease to the valve ring seal ring (3). Install seal ring in the valve ring (12). See figure 84.

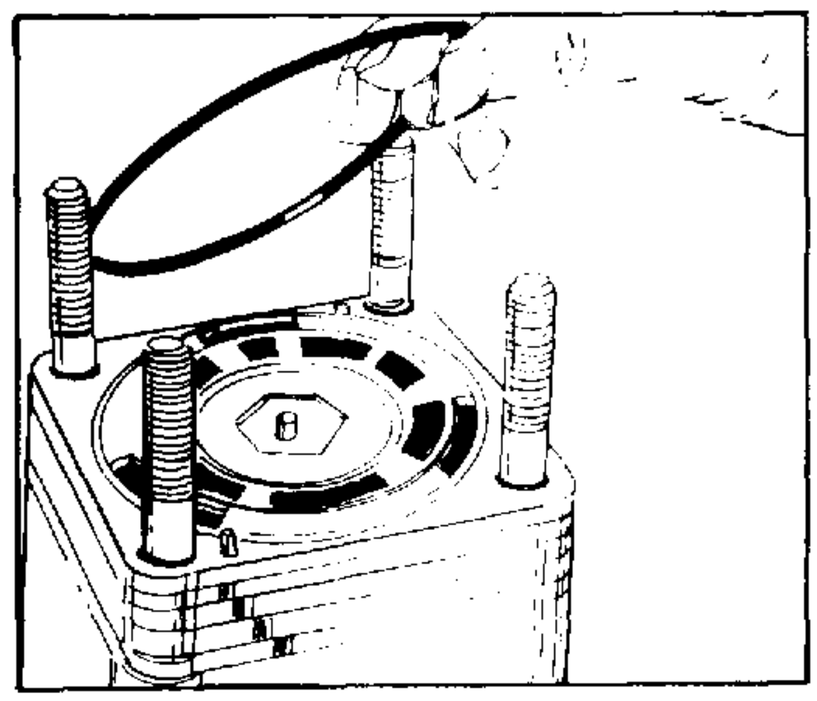

FIGURE 84.

NOTE

NOTE: If port manifold (8) and port cover (2) as removed is an integral component, install the check ball or relief valve components into this integral component at this time per procedure #40 or #40A then follow procedure #38 and #39, and install nuts per procedure #43.

install 3/4 inch springs

36. Place port manifold (8), valve side up on a clean surface. Install three 3/4 inch (19 mm) springs (9) into the spring pockets. See figure 85.

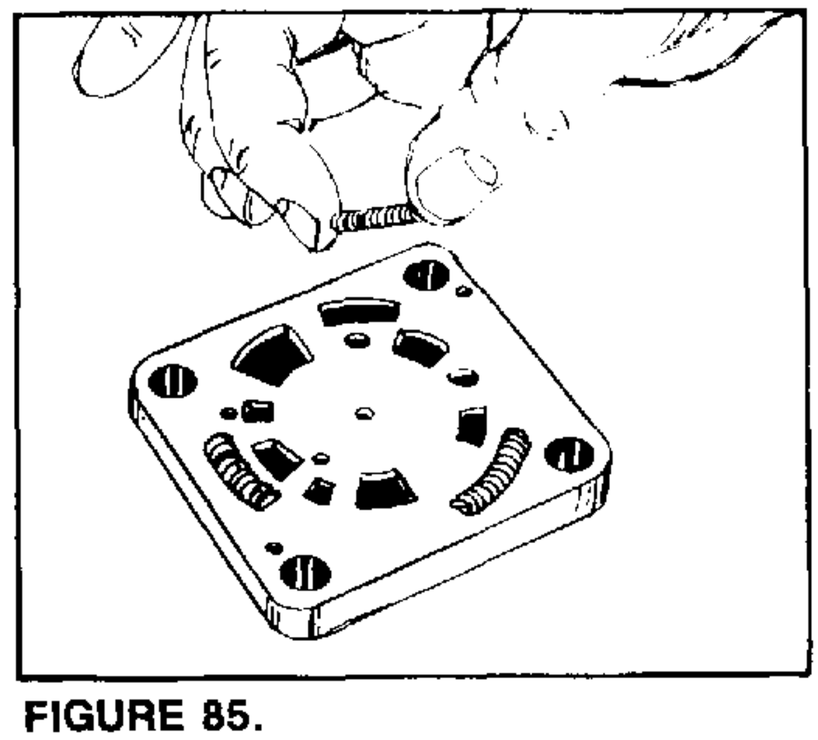

FIGURE 85.

install port manifold or integral port manifold/cover

37. Apply a few drops of oil to the valve plate (13). Align the grooves on the side of the port manifold (8) with the groves onthe side of the isolation manifold (15) and assemble the port manifold with the springs toward the valve plate (13). Be careful not to pinch a spring during installation. The two alignment pins (11), in the valve plate, will engage the holes in the port manifold. The pin on the hex drive assembly (10) must engage the center hole in the port manifold. See figure 86.

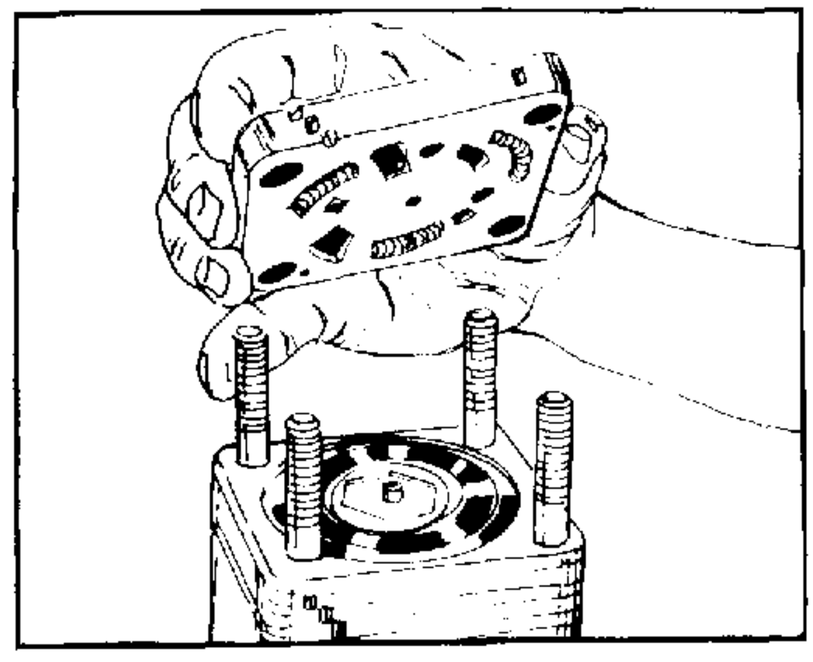

FIGURE 86.

install check ball

38. If plug (6) was removed, install new O-ring (7) on plug (6), insert check ball (5) into check ball hole in port cover (2). Be sure ball (5) is seated in bottom of check ball hole. Turn plug assembly (6, 7), into port cover (2) until ball (5) is retained. See figure 87.

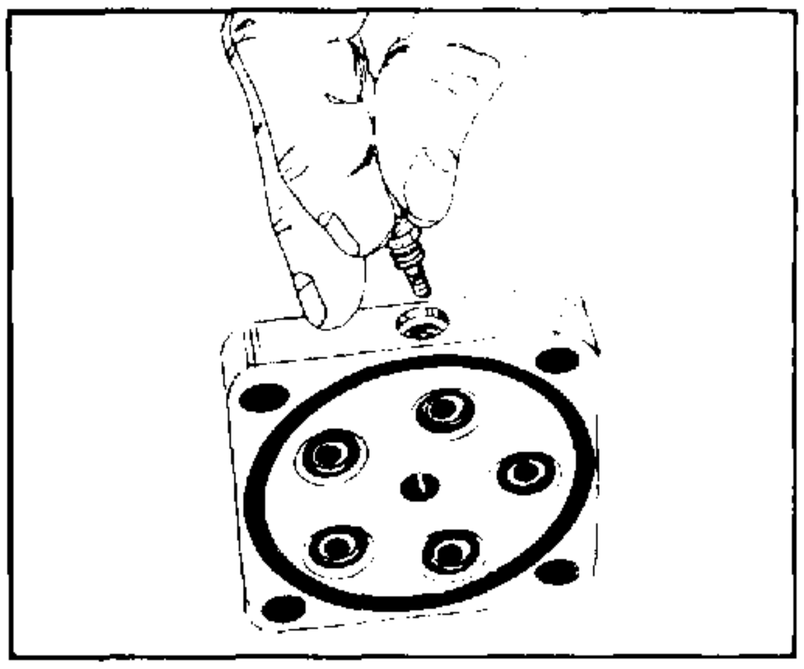

FIGURE 87.

install relief valve, spring assembly and hex plug

38.A If removed, place new O-ring (7A) onto hex plug (6A). Apply clean grease to the O-ring. Place the rounded nose of the relief valve, spring assembly (5A) into its bore in the port cover (2), place the small end of coilspring (5B) on the small pin on the back of the relief valve spring assembly so it is held in place. Install the hex plug so the valve and coil spring fit into the bore in the hex plug. See figure 8, page 2-31. Tighten the hex plug to 50-55 lbs. (68-75 N m).

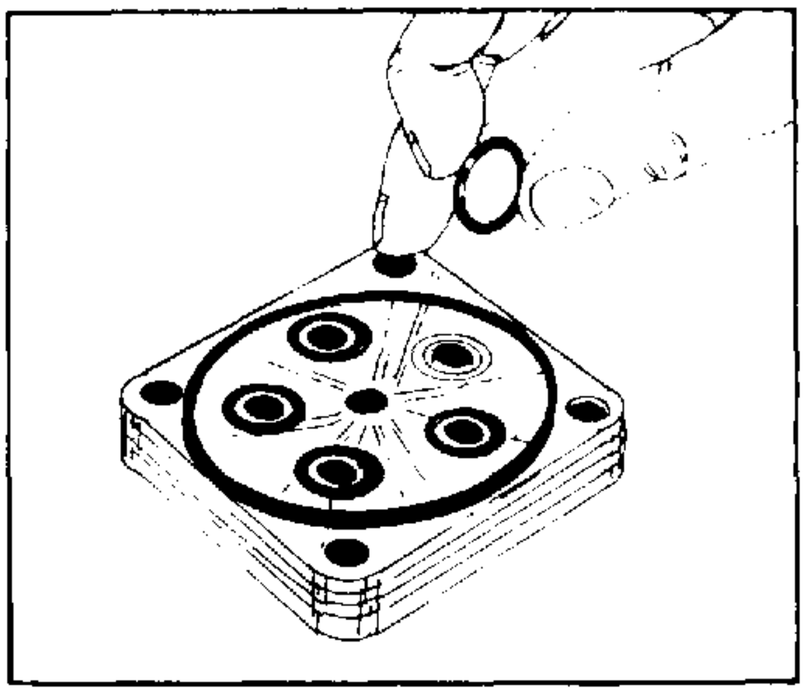

FIGURE 88.

place seals on port cover

39. Apply clean grease to the four or five O-rings (4) as required and seal ring (3). Place the new O-rings (4) and seal ring (3) into their proper location in the port cover (2). See figure 88.

install port cover

40. Align a groove on the side of the port cover (2) with the grooves on the side of the port manifold (8) and place the port cover (2) into position. See figure 89.

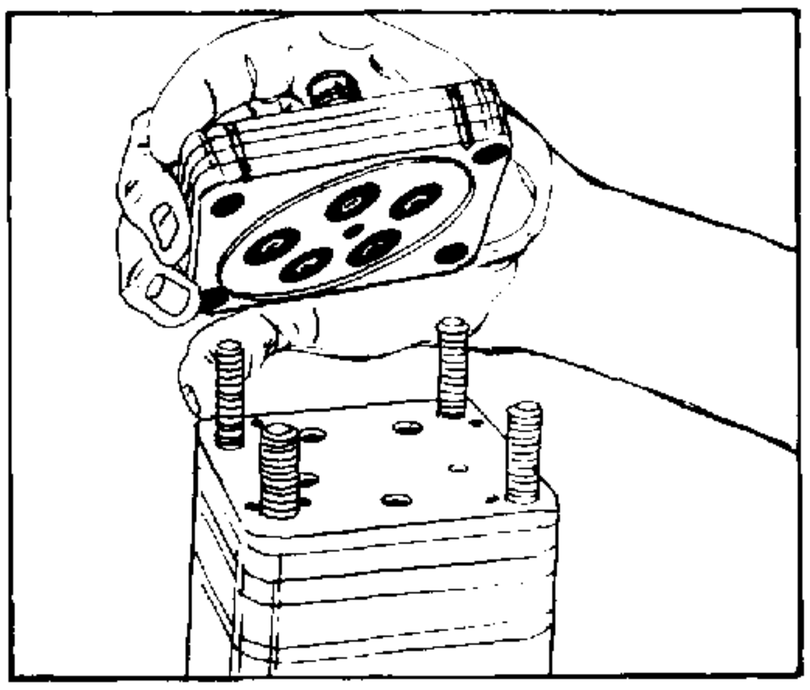

FIGURE 89.

install nuts

41. Install nuts (1) onto bolts (40). Tighten each one gradually until resistance if felt. Torque to 18-22 foot pounds (24-30 N m) in sequence shown. See figures 90 and 91. Torque plug (6) to 8-12 foot pounds (11-16 N m). See figure 92.

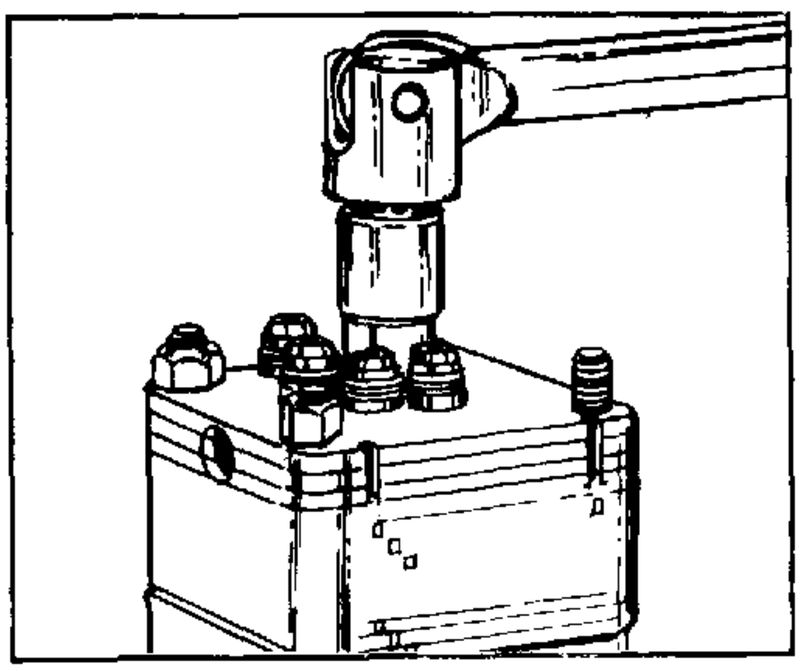

FIGURE 90.

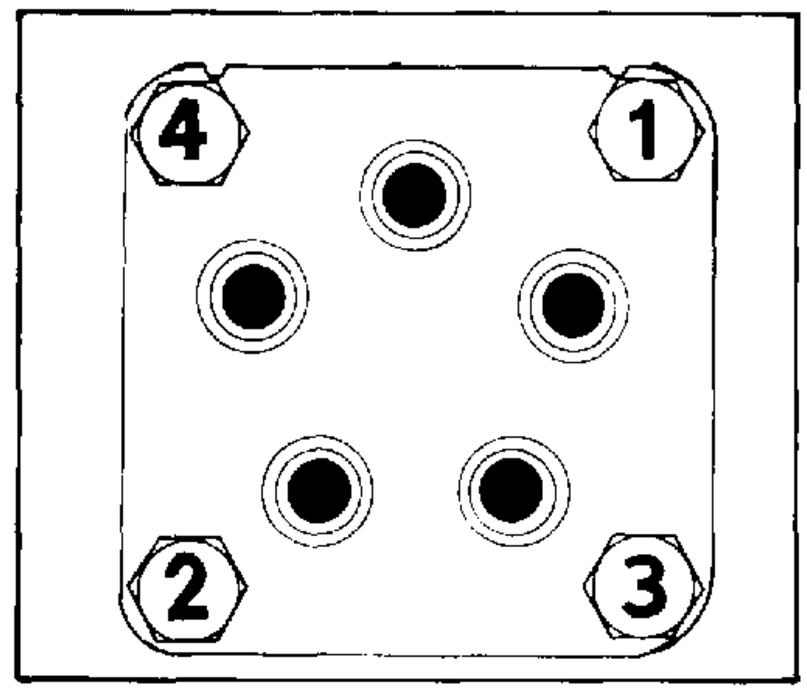

FIGURE 91.

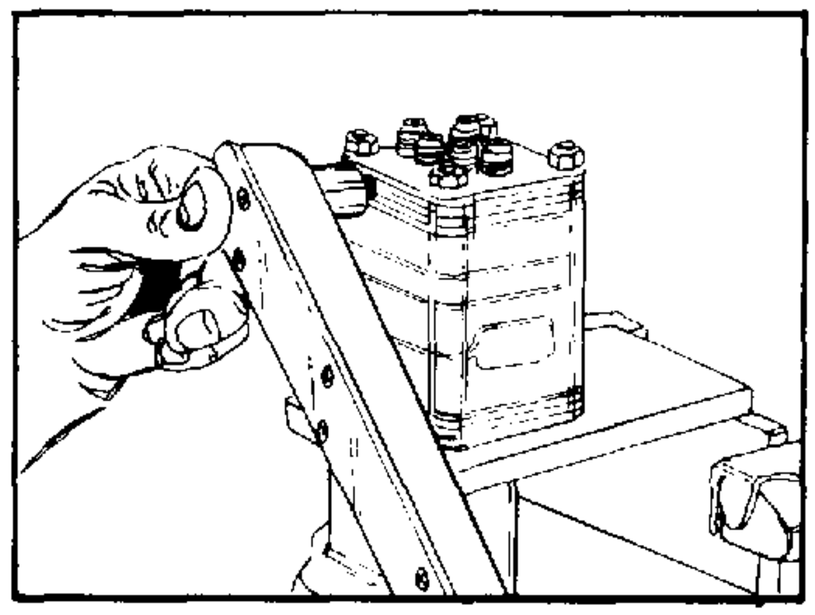

FIGURE 92.

install dirt and water seal

42. Apply a small amount of clean grease on the lip of the seal (39). Install the seal onto the jacket tube and input shaft/wheel tube. See figure 93.

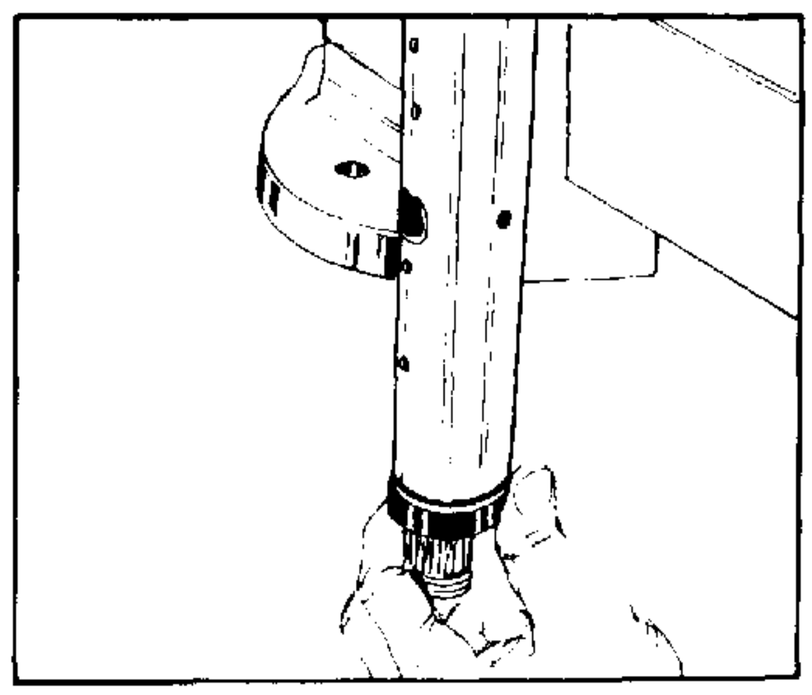

FIGURE 93.

make final assembly check and remove unit from fixture

43. Make a final check of the relative groove positions on the side of the unit using the component alignment groove graphic on page 2-26 for comparison. Disassemble and correct any misassembly. Remove the four nuts holding the unit to the fixture and remove the unit. See figure 94.

44. Hydraulic fluid, filling and air bleeding refer to page 2-20.

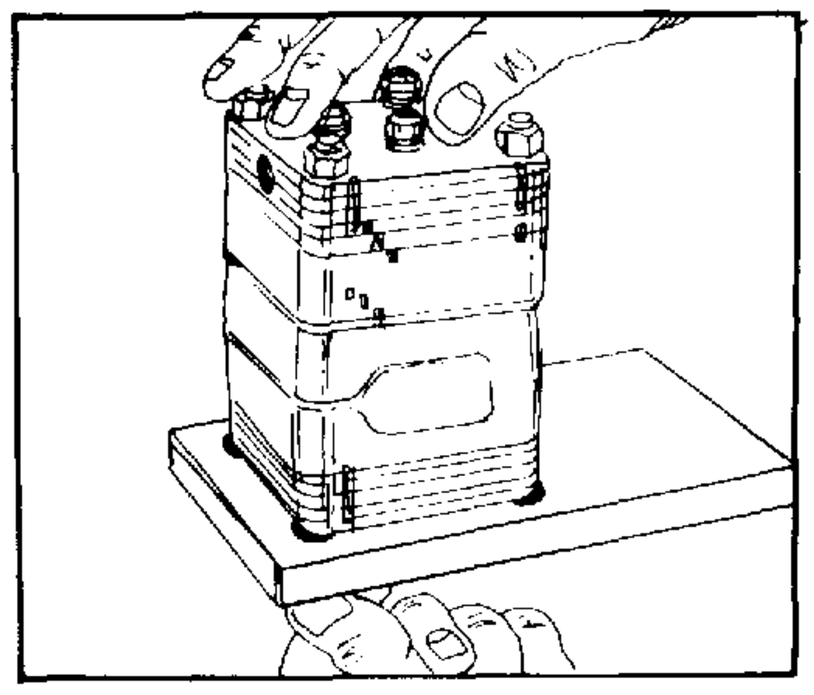

FIGURE 94.

ELECTRICAL SCHEMATICS
482, 580, 582, Hi-582 Special
(Magneto Ignition)
1604, 1606: S/N 720,000 thru 756,999

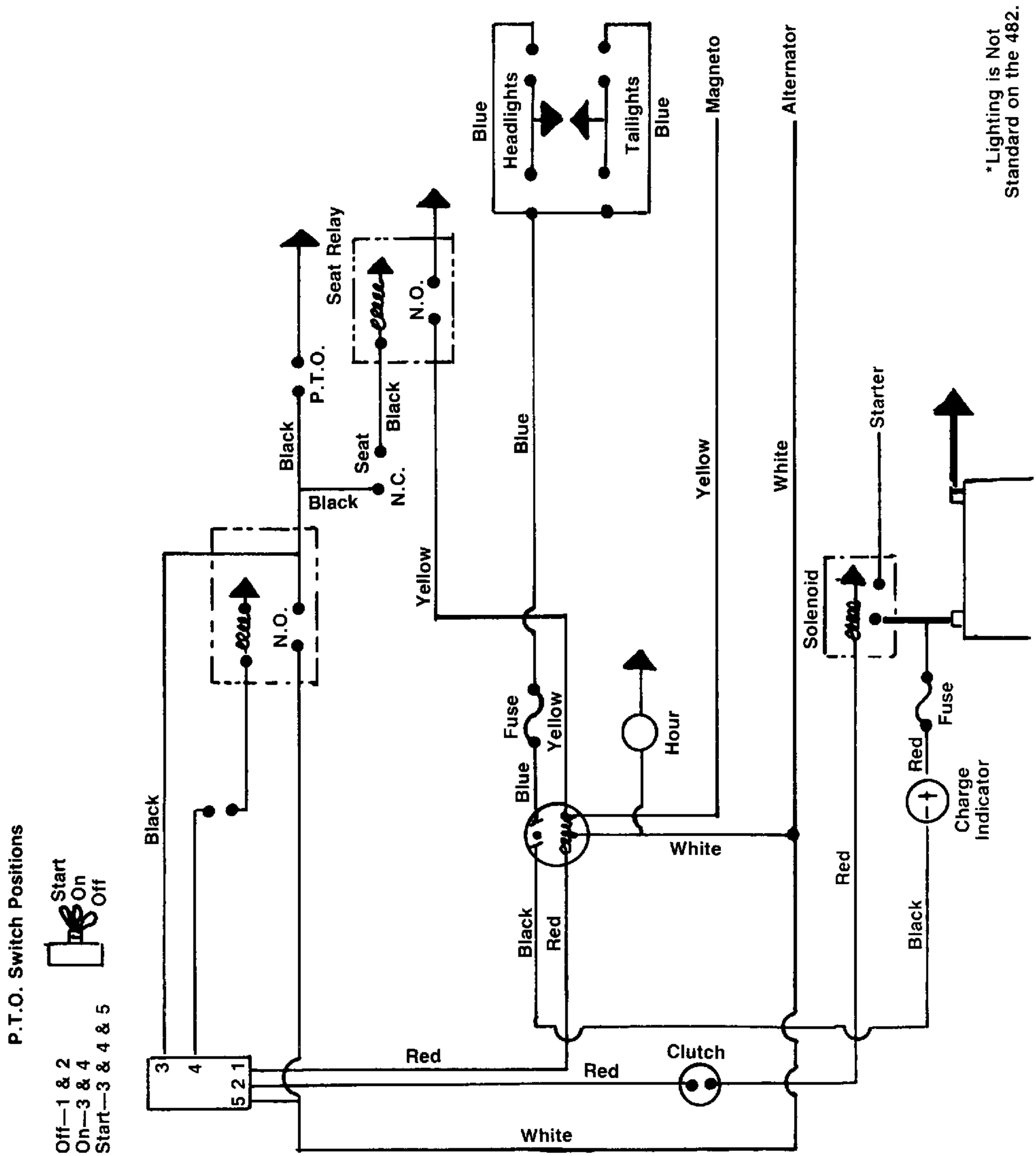

1210: S/N 750, 038 THRU 756,999
1810, 1811, 1812: S/N 750,127 THRU 756,999

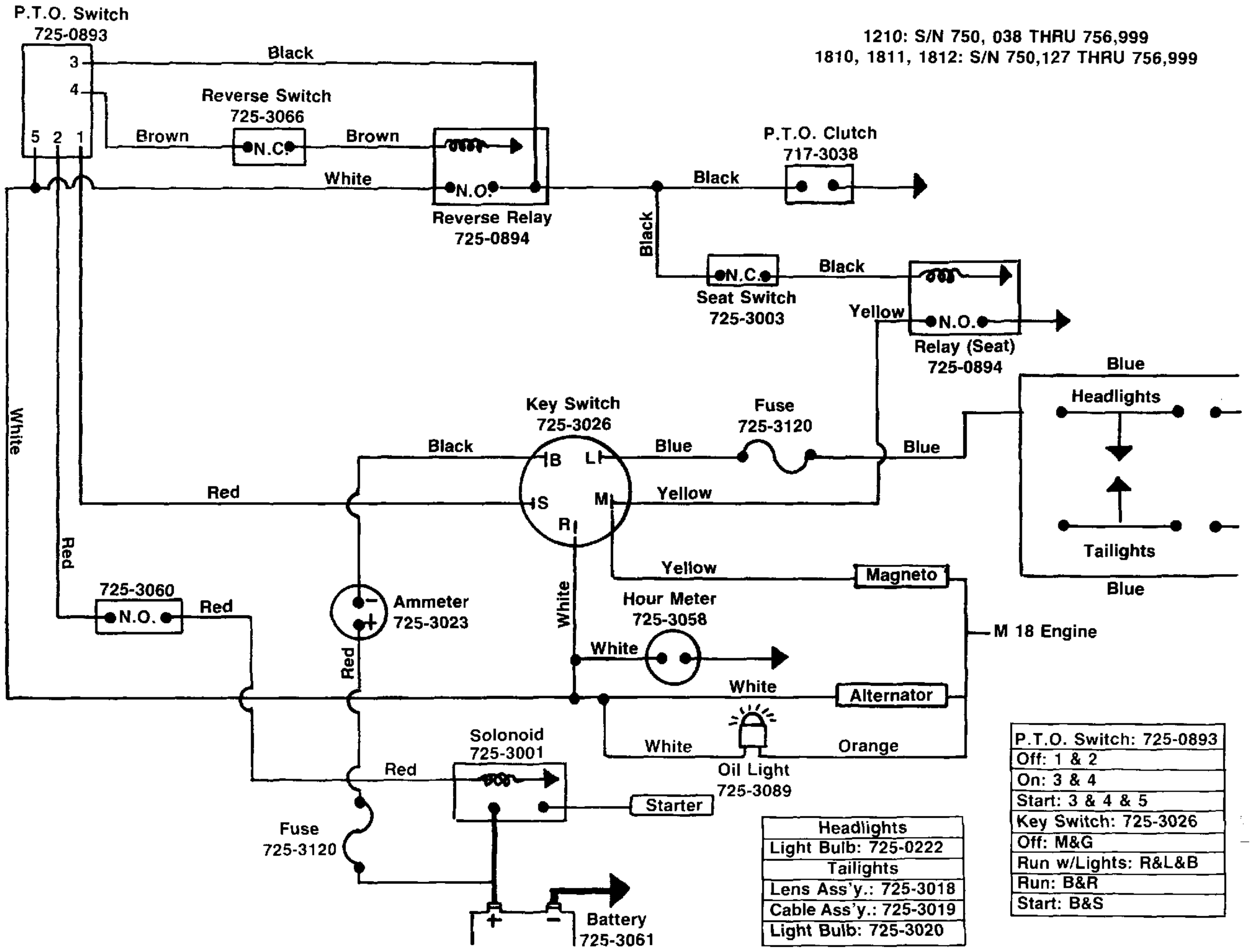

Headlights
Light Bulb: 725-0222
Tailights
Lens Ass'y.: 725-3018
Cable Ass'y.: 725-3019
Light Bulb: 725-3020

P.T.O. Switch: 725-0893
Off: 1 & 2
On: 3 & 4
Start: 3 & 4 & 5
Key Switch: 725-3026
Off: M&G
Run w/Lights: R&L&B
Run: B&R
Start: B&S

MODEL 982
S/N 665,000 THRU 744,199

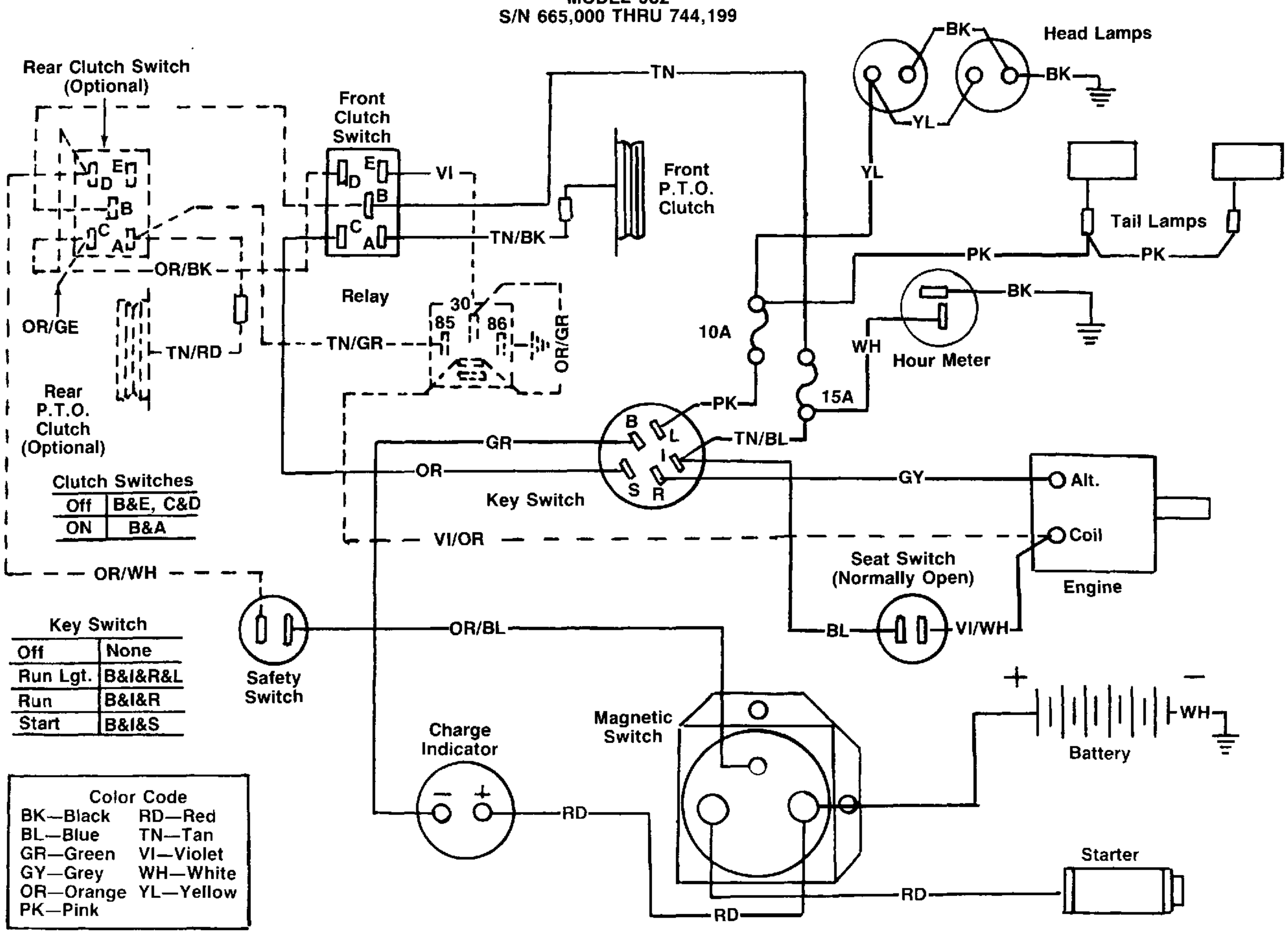

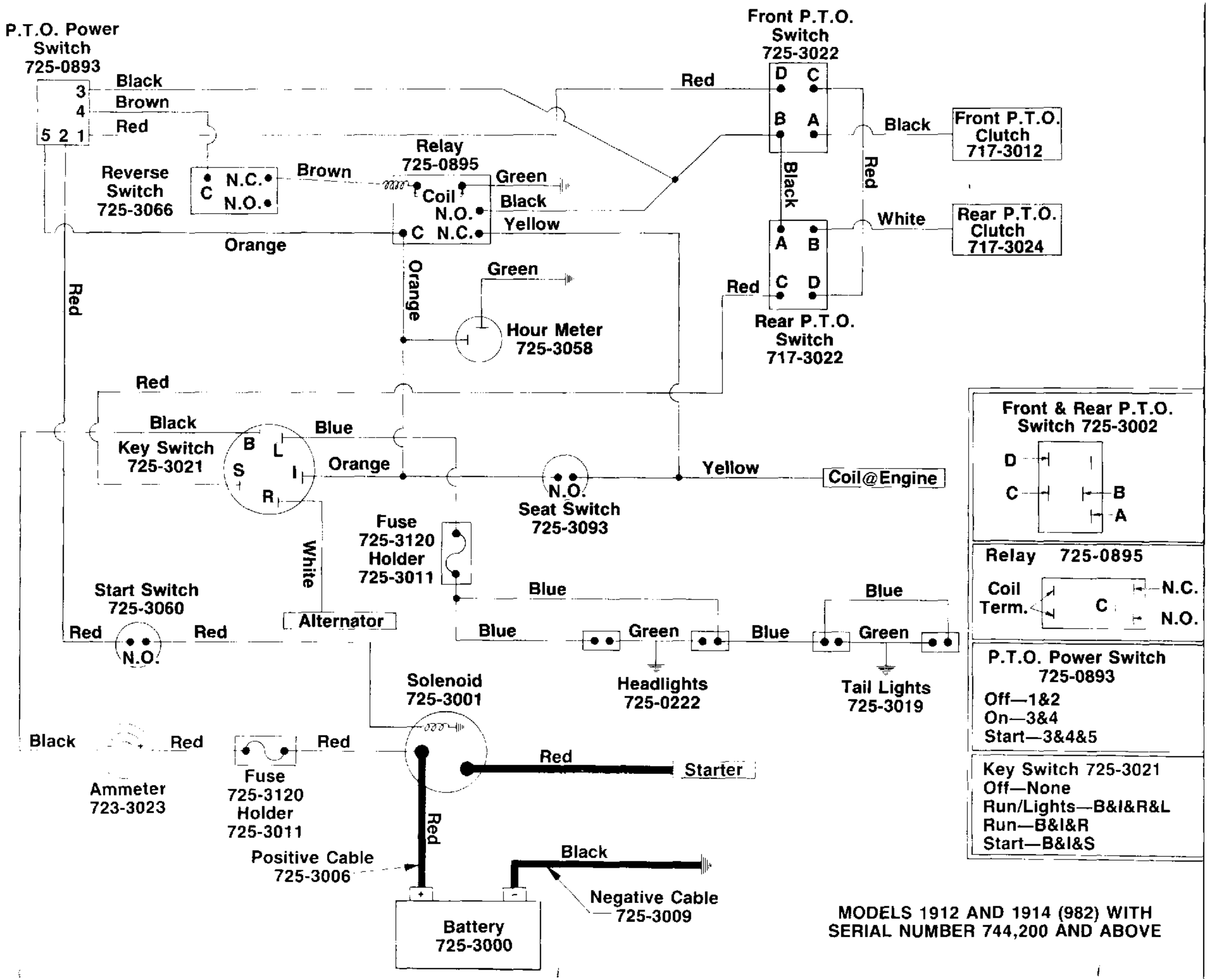
P.T.O. Power Switch 725-0893
3
4
5 2 1
Black
Brown
Red
Reverse Switch 725-3066
C
N.C.
N.O.
Brown
Relay 725-0895
Coil
N.O.
C
N.C.
Green
Black
Yellow
Orange
Red
Orange
Green
Hour Meter 725-3058
Front P.T.O. Switch 725-3022
D
C
B
A
Red
Black
Red
Black
Front P.T.O. Clutch 717-3012
White
Rear P.T.O. Clutch 717-3024
A
B
C
D
Red
Rear P.T.O. Switch 717-3022
Red
Black
Key Switch 725-3021
B
L
S
I
R
Blue
Orange
N.O.
Seat Switch 725-3093
Yellow
Coil@Engine
White
Fuse 725-3120 Holder 725-3011
Start Switch 725-3060
Red
Red
N.O.
Alternator
Blue
Blue
Green
Blue
Blue
Green
Headlights 725-0222
Tail Lights 725-3019
Solenoid 725-3001
Black
Red
Ammeter 723-3023
Red
Fuse 725-3120 Holder 725-3011
Red
Starter
Red
Positive Cable 725-3006
Black
Negative Cable 725-3009
Battery 725-3000
Front & Rear P.T.O. Switch 725-3002
D
C
B
A
Relay 725-0895
Coil Term.
C
N.C.
N.O.
P.T.O. Power Switch 725-0893
Off—1&2
On—3&4
Start—3&4&5
Key Switch 725-3021
Off—None
Run/Lights—B&I&R&L
Run—B&I&R
Start—B&I&S
MODELS 1912 AND 1914 (982) WITH SERIAL NUMBER 744,200 AND ABOVE

MODEL 882 AND 1572 DIESEL TRACTORS
S/N 728,302 THRU 756,999

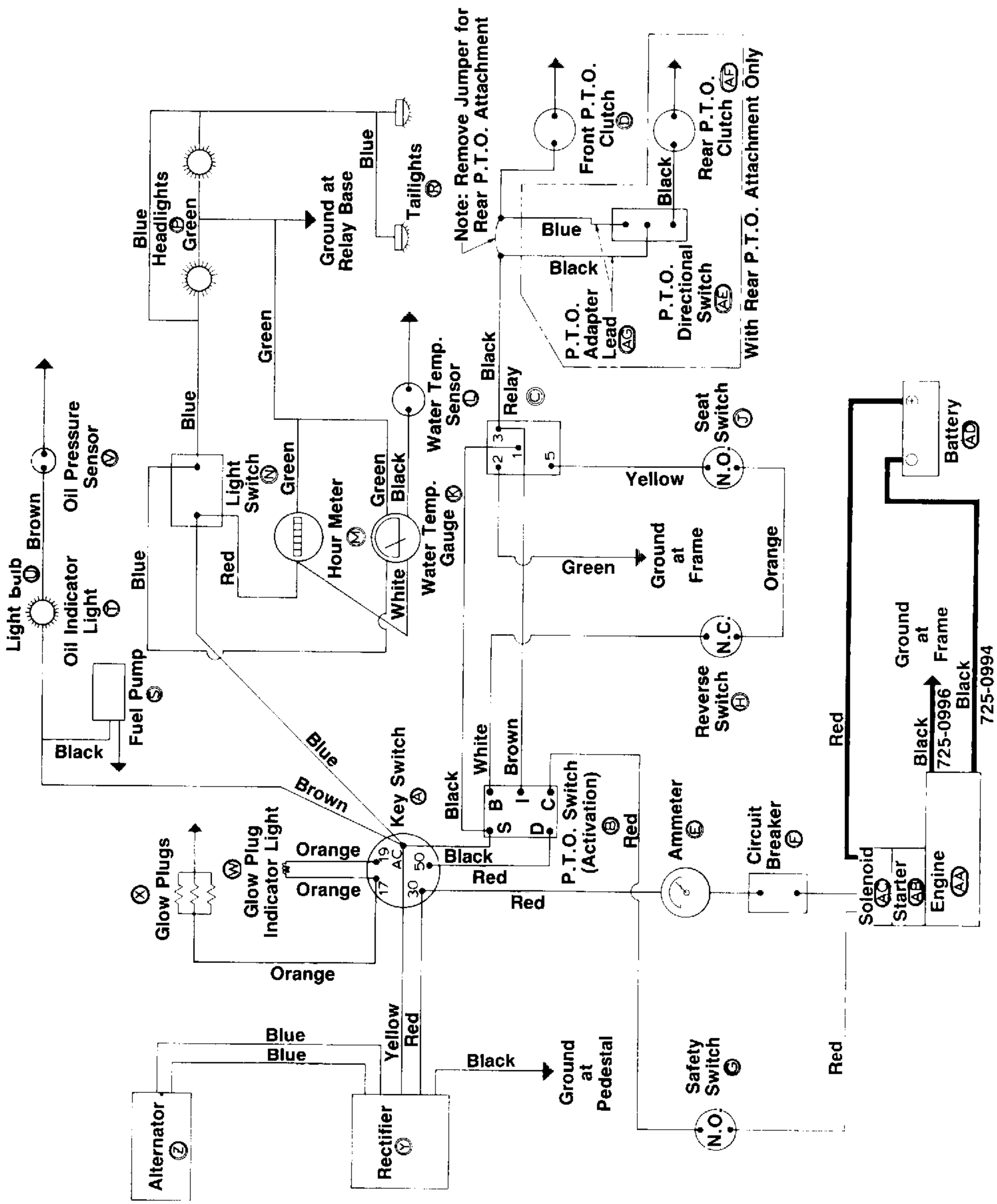

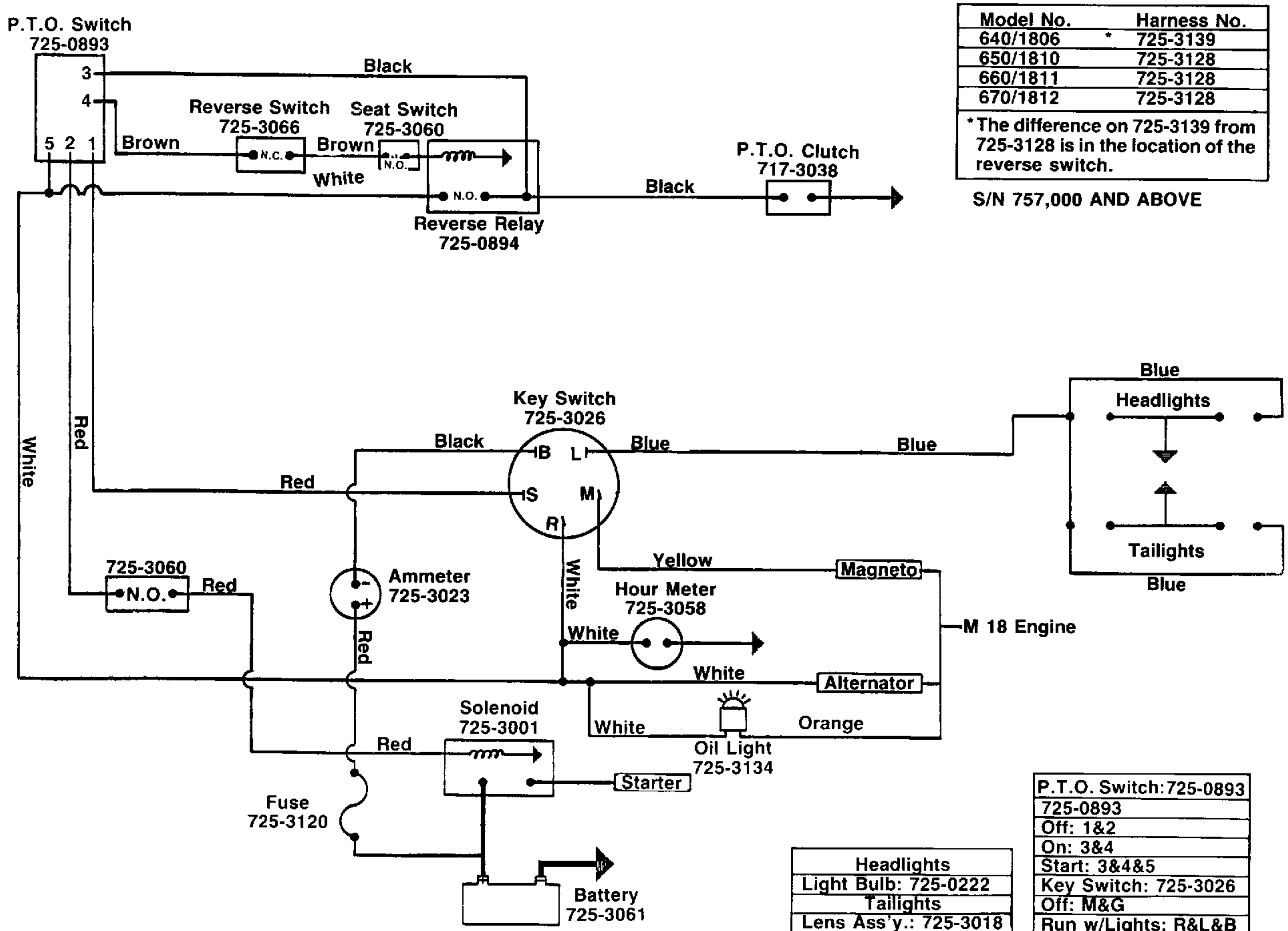

Model No.		Harness No.
640/1806	*	725-3139
650/1810		725-3128
660/1811		725-3128
670/1812		725-3128

*The difference on 725-3139 from 725-3128 is in the location of the reverse switch.

S/N 757,000 AND ABOVE

Headlights
Light Bulb: 725-0222
Tailights
Lens Ass'y.: 725-3018
Cable Ass'y.: 725-3019
Light Bulb: 725-3020

P.T.O. Switch: 725-0893
725-0893
Off: 1&2
On: 3&4
Start: 3&4&5
Key Switch: 725-3026
Off: M&G
Run w/Lights: R&L&B
Run: B&R
Start: B&S

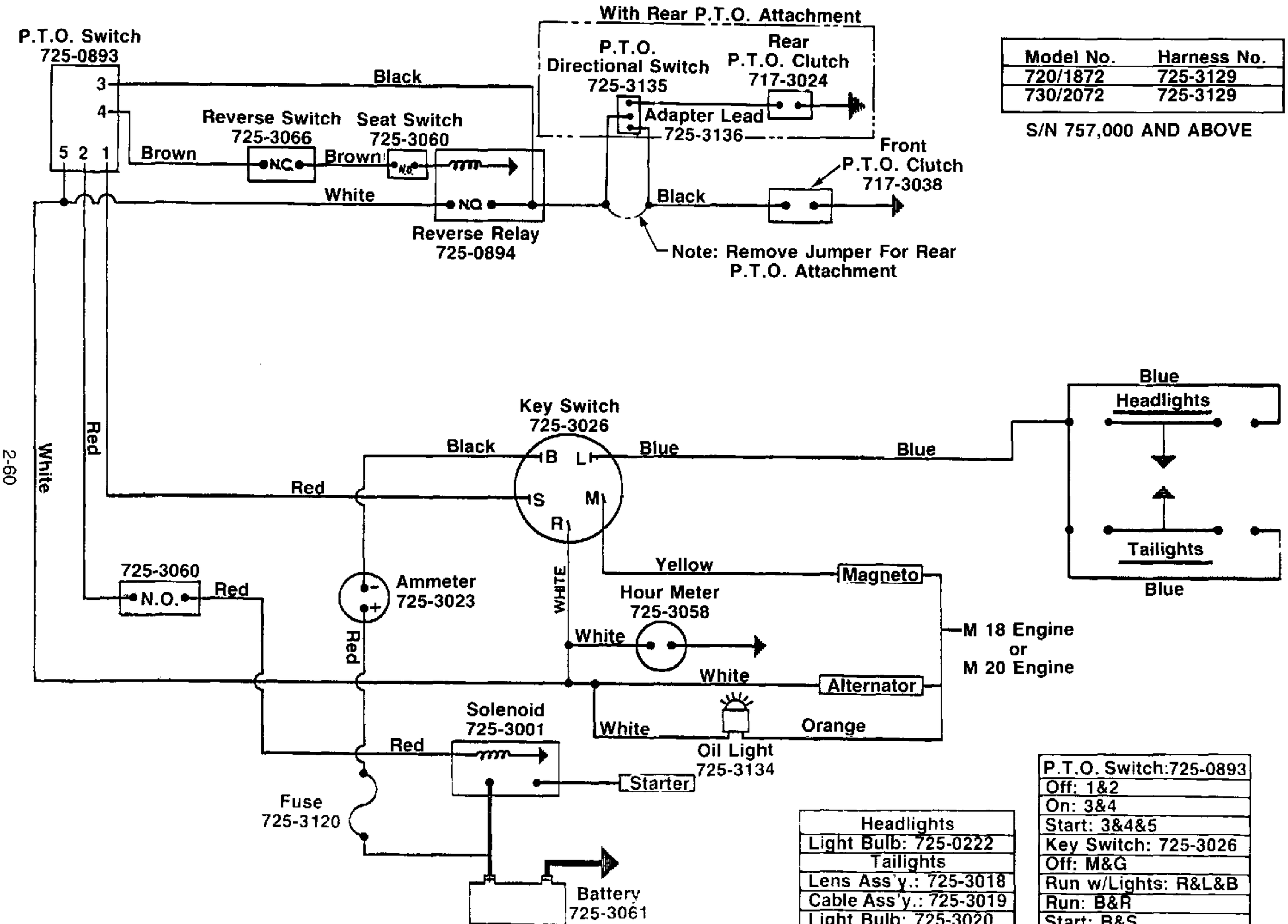

Model No.	Harness No.
720/1872	725-3129
730/2072	725-3129

S/N 757,000 AND ABOVE

Headlights
Light Bulb: 725-0222
Tailights
Lens Ass'y.: 725-3018
Cable Ass'y.: 725-3019
Light Bulb: 725-3020

P.T.O. Switch:725-0893
Off: 1&2
On: 3&4
Start: 3&4&5
Key Switch: 725-3026
Off: M&G
Run w/Lights: R&L&B
Run: B&R
Start: B&S

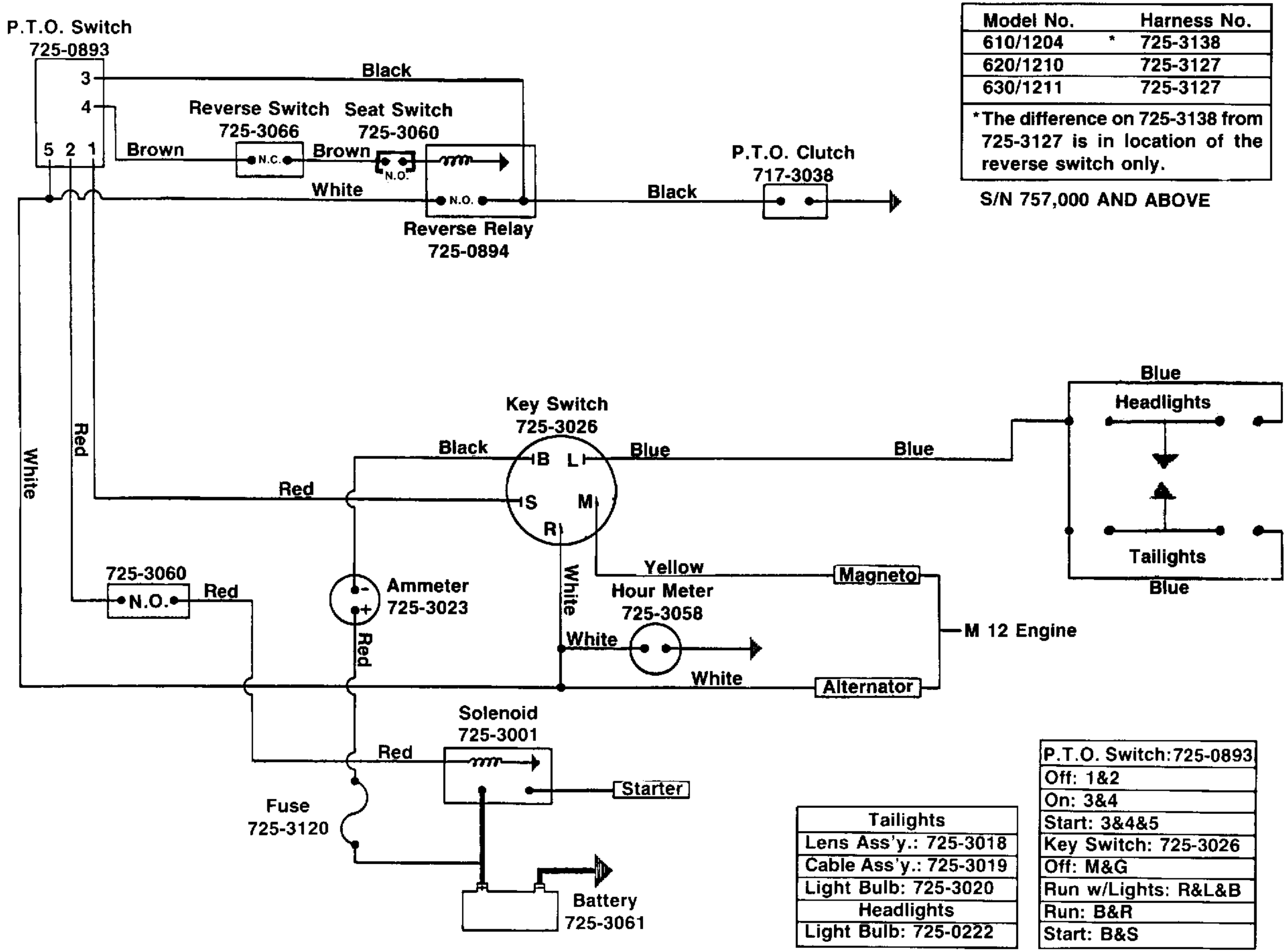

Model No.		Harness No.
610/1204	*	725-3138
620/1210		725-3127
630/1211		725-3127

*The difference on 725-3138 from 725-3127 is in location of the reverse switch only.

S/N 757,000 AND ABOVE

Tailights
Lens Ass'y.: 725-3018
Cable Ass'y.: 725-3019
Light Bulb: 725-3020
Headlights
Light Bulb: 725-0222

P.T.O. Switch:725-0893
Off: 1&2
On: 3&4
Start: 3&4&5
Key Switch: 725-3026
Off: M&G
Run w/Lights: R&L&B
Run: B&R
Start: B&S

IMPORTANT

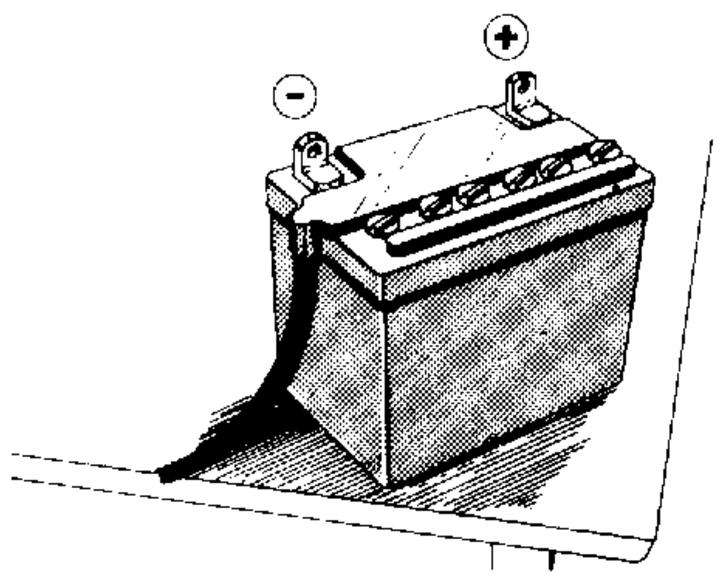

HOW YOU ACTIVATE THIS BATTERY WILL AFFECT ITS LIFE AND PERFORMANCE.

1. Remove battery from tractor. Place on a bench or table.
2. Fill each cell to the top of the plates.

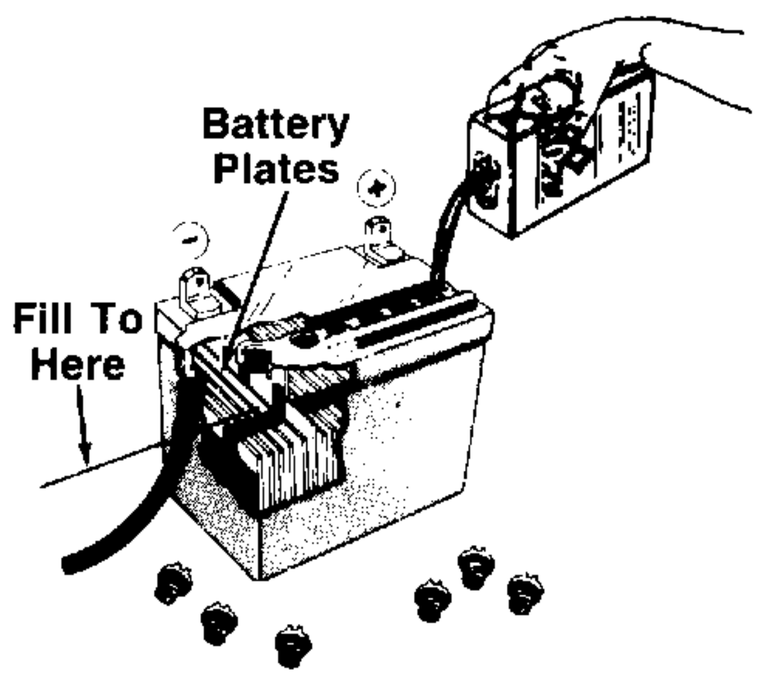

WARNING

ELECTROLYTE IS DILUTED SULFURIC ACID. USE EXTREME CARE TO AVOID SPILLING. IT CAN DESTROY CLOTHING AND BURN YOUR SKIN.

NOTE

When battery is charged the heat will expand the electrolyte.

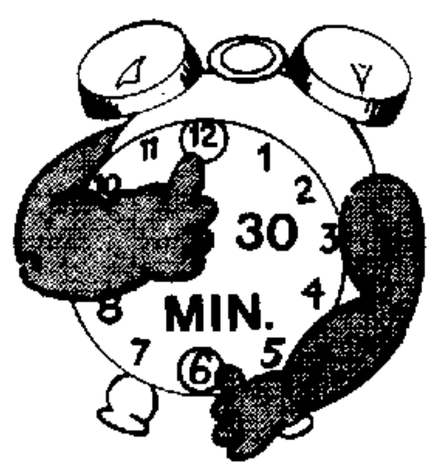

3. Allow the battery to sit 30 minutes. This allows the chemical action to take place.
4. Charge the battery at 5 AMPS MAXIMUM until the specific gravity is at least 1.250.

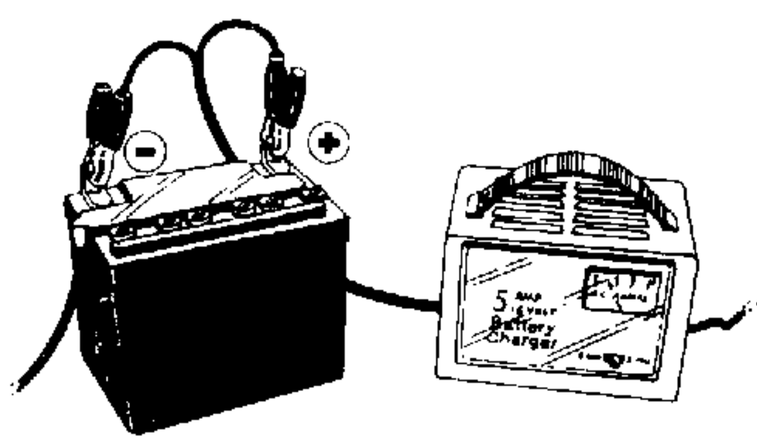

CAUTION

Charging the battery at more than 5 AMPS will cause the plates to warp and short out your battery.

5. Check the level of electrolyte in all cells and add if necessary, to bring the level up to the SPLIT RING.
6. Wash off any spilled electrolyte.
7. Install the battery in tractor.

ATTACH THE POSITIVE CABLE FIRST.

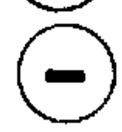 ATTACH THE NEGATIVE CABLE LAST.

8. Attach the battery hold-down.
9. IF YOU HAVE TAKEN TIME TO PROPERLY INSTALL THIS BATTERY IT WILL GIVE YOU A LONG LIFE.

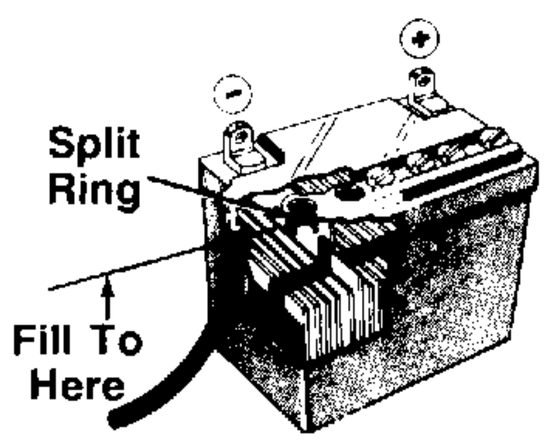

BRAKE ADJUSTMENTS SUPER GARDEN TRACTORS (With Dual Pedal System)

BRAKE ADJUSTMENT

During normal operation on this machine, the brakes are subject to wear and will require periodic examination and adjustment.

Brake adjustment check:

1. To check brake adjustment, place a 1 inch thick wood block between the single brake pedal and the brake pedal lock. See figure 1.
2. With the 1 inch thick wood block installed, the brake disc pads should be applying a light amount of friction against the brake disc rotor. If they are not, the brakes need adjustment. See figure 1.

Brake adjustment: See figure 2.

1. Latch turning brake pedals together.
2. Place a 1 inch thick wood block between the single brake pedal and the brake pedal lock. See figure 1.
3. Remove cotter pins and washers from rear end of both brake rods and loosen jam nuts from clevises.
4. Block the front wheels and raise the rear wheels.
5. Adjust each brake rod in turn by:
   A. To tighten the brakes, shorten the length of the brake rod by turning it into the clevis.
   B. To loosen the brakes, make the brake rod longer by turning it away from the clevis.
6. Adjust the brake rods until the disc pads apply a light amount of friction against the rotor.
7. Reinstall cotter pins, washers, and tighten jam nuts.
8. Recheck brake adjustment. If the adjustment is correct, remove wood block and lower tractor.
9. With the wood block removed, the brake disc pads must not rub against the brake rotor.

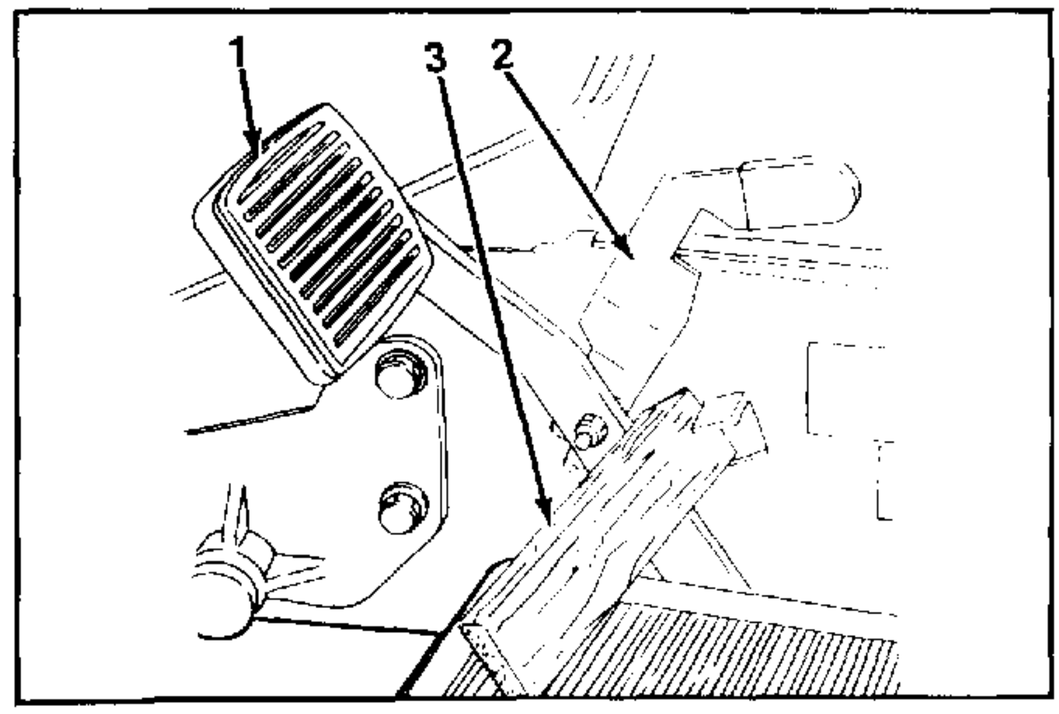

FIGURE 1.

1. Single Brake Pedal
2. Brake Pedal Lock
3. 1 Inch Thick Wood Block

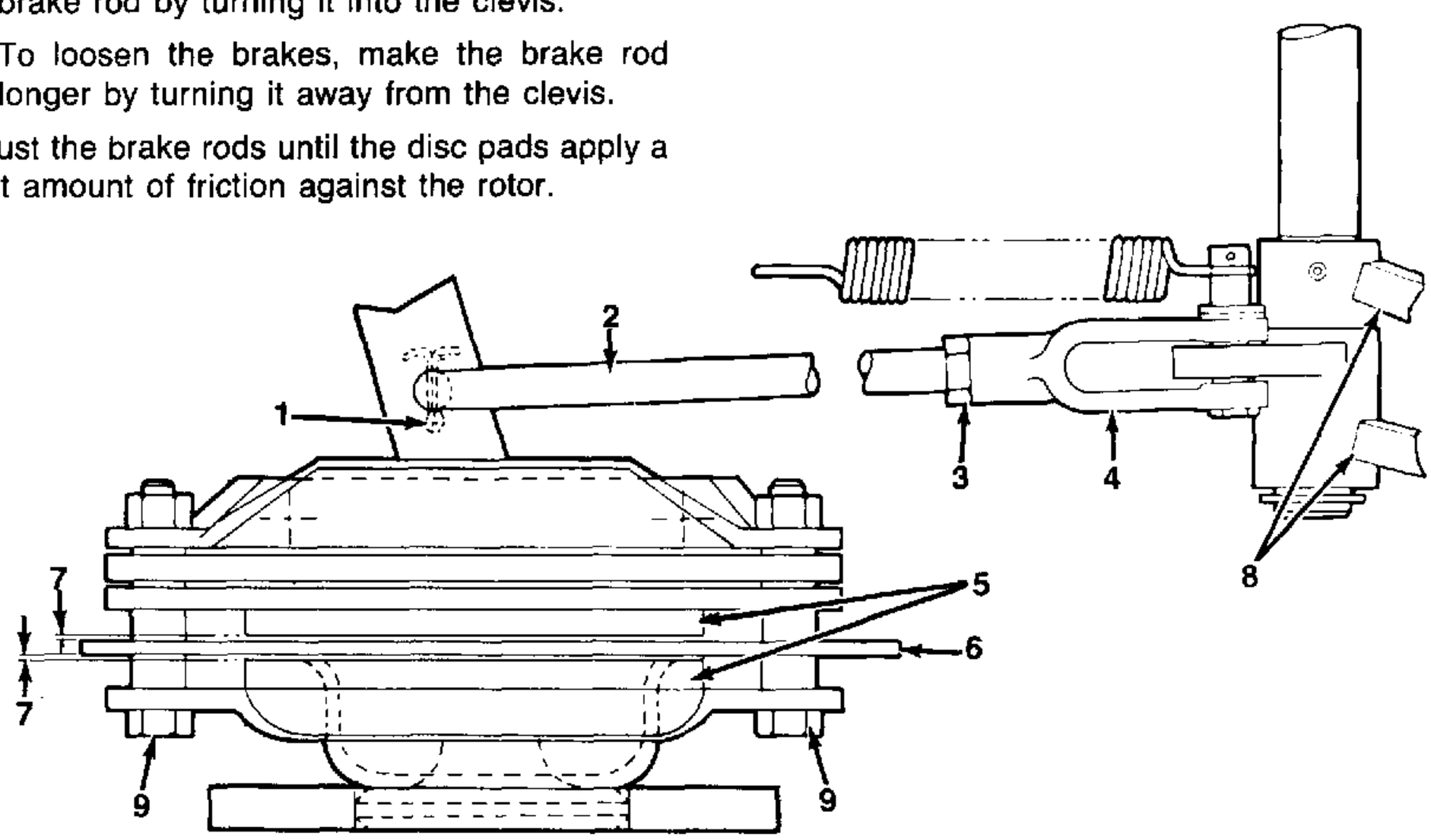

FIGURE 2. Right Side Shown

1. Cotter Pin and Washer (Both Sides)
2. Brake Rod (Both Sides)
3. Jam Nut (Both Sides)
4. Clevis (Both Sides)
5. Disc Pads (Both Sides)
6. Rotor (Both Sides)
7. Clearance Between Disc Pads and Rotor (Both Sides)
8. Turning Brake Pedal Arms
9. Brake Assembly Mounting Bolts

BRAKE ADJUSTMENT

ADJUSTING THE BRAKES (Four-Speed Transaxle)

Brake adjustment:

During normal operation of this machine, the brakes are subject to wear and will require periodic examination and adjustment.

With the clutch-brake pedal in the up position, take all the slack out of the linkage by moving the brake arm up and pulling the brake rod down. Then adjust the nut to allow 1/4 to 5/16-inch clearance between the spacer and brake arm. After adjusting, ensure proper brake operation before operating the tractor. See figure 1.

ADJUSTING THE BRAKES (Garden Tractors)

Brake adjustment:

During normal operation of this machine, the brakes are subject to wear and will require periodic examination and adjustment.

Brake adjustment check:

1. To check brake adjustment, place a 1/2 inch thick wood block between the single brake pedal and the brake pedal lock. See figure 2.
2. With the 1/2 inch thick wood block installed, the brake disc pads should be applying a light amount of friction against the brake disc rotor. If they are not, the brakes need adjustment. See figure

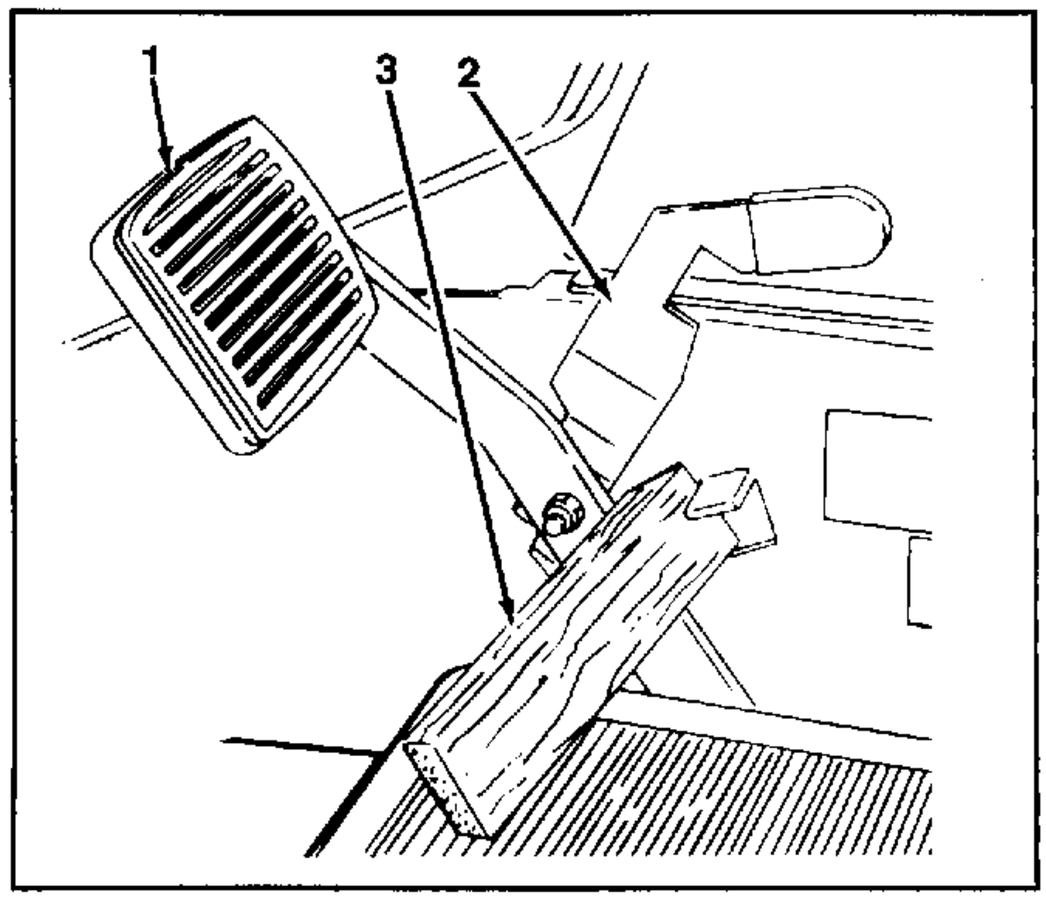

FIGURE 2.

1. Single Brake Pedal
2. Brake Pedal Lock
3. 1/2 Inch Thick Wood Block

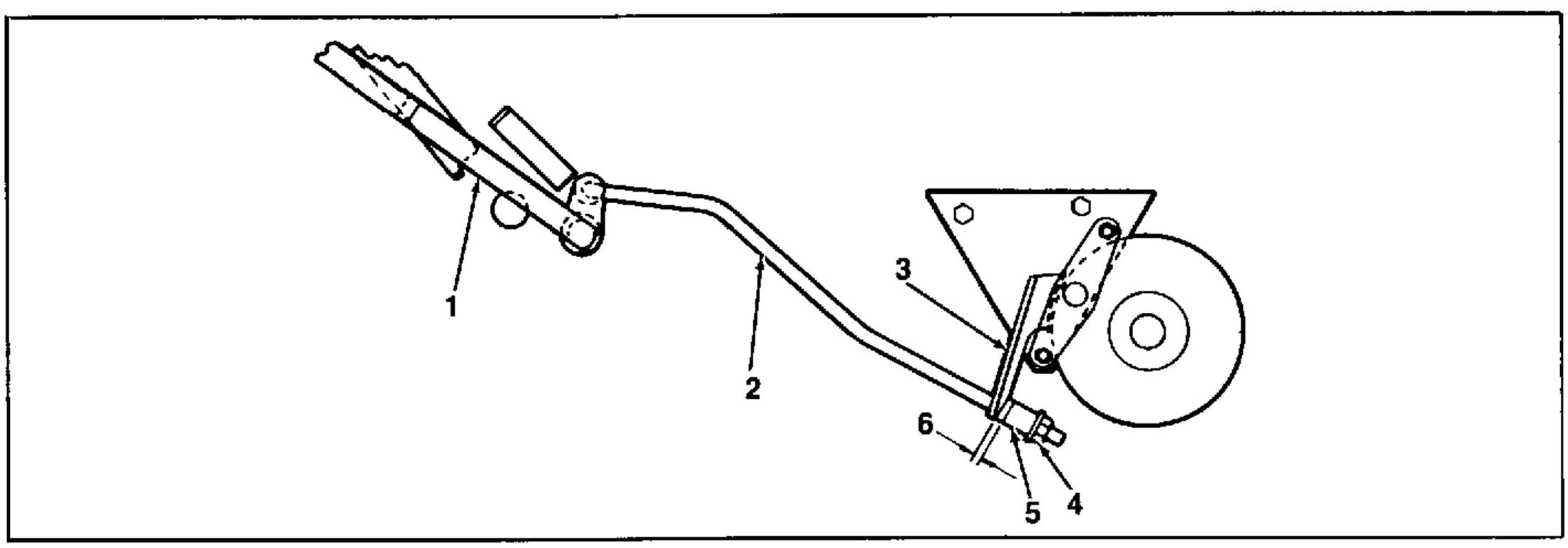

FIGURE 1. (1204 Tractor)

1. Clutch-Brake Pedal
2. Brake Rod
3. Brake Arm
4. Nut
5. Spacer
6. 1/4 to 5/16 Inch Clearance Between Spacer and Brake Arm

With the brake pedal disengaged, remove the clevis pinned end of one of the brake rod assemblies from the jackshaft assembly by removing the cotter pin from the clevis pin. See figure 3.

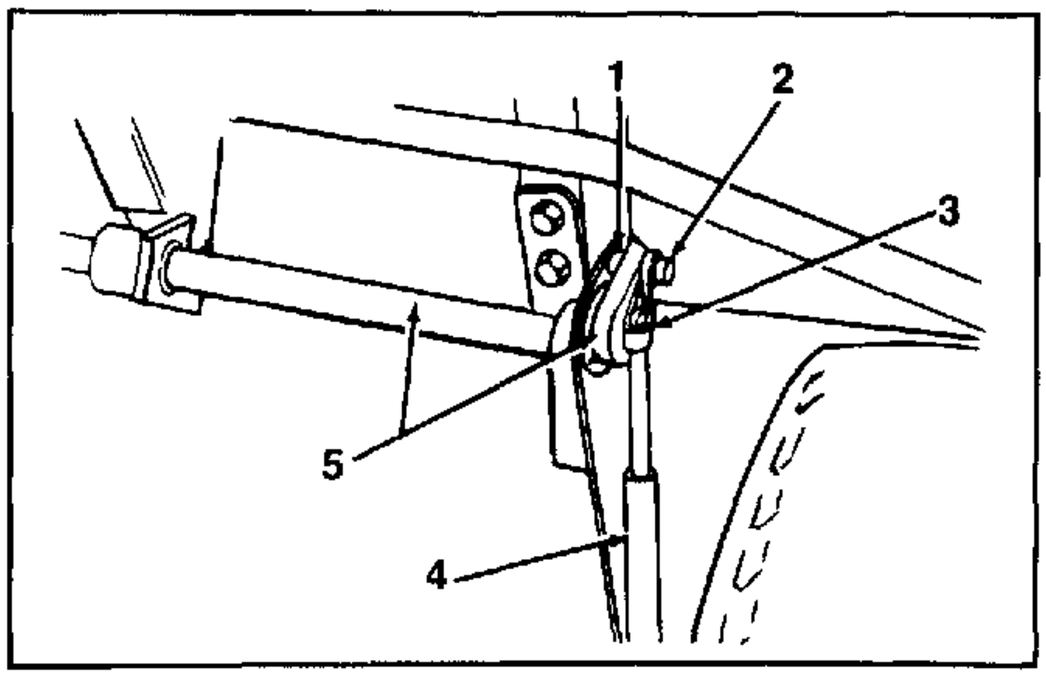

FIGURE 3.

1. Cotter Pin
2. Clevis Pin
3. Clevis
4. Brake Rod Assembly
5. Jackshaft Assembly

Thread the clevis onto the brake rod one turn. Reconnect the clevis to the jackshaft assembly. There should be a minimum amount of clearance (no drag) between the brake pads and the rotor. If not, repeat adjustment as necessary. See figure 4.

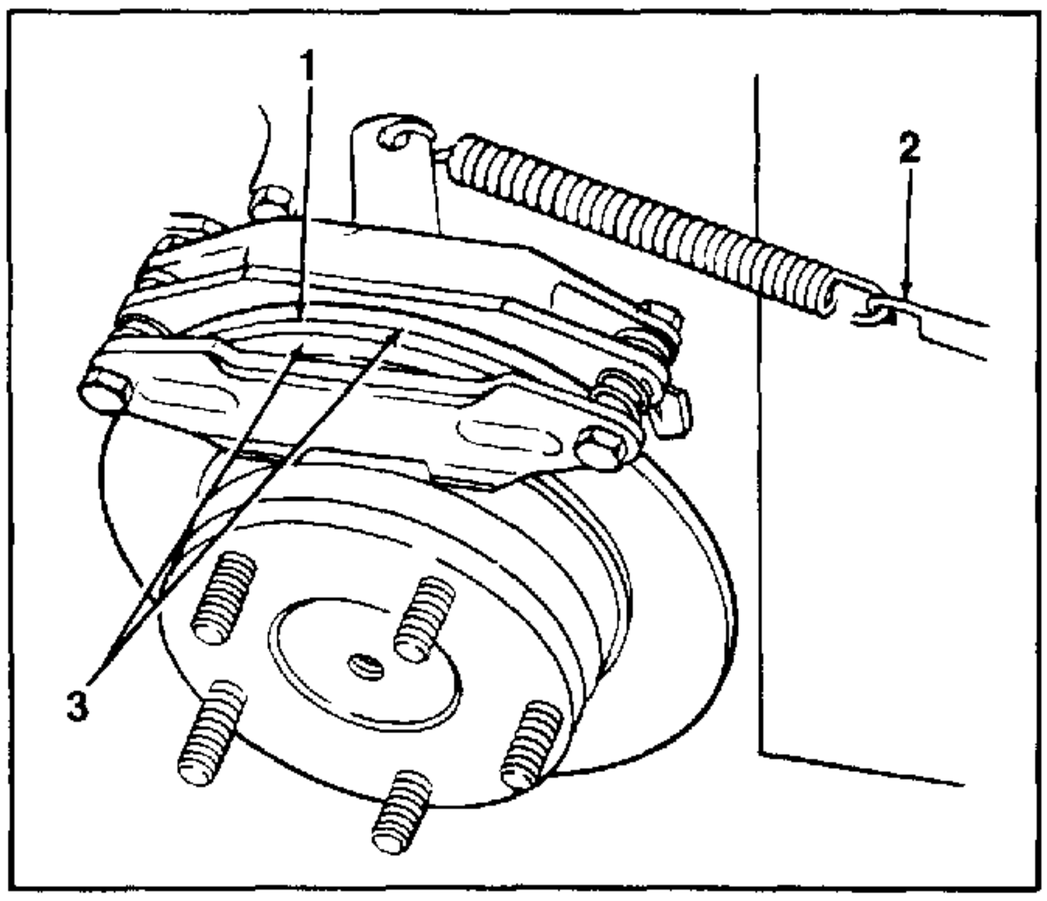

FIGURE 4.

1. Rotor
2. Brake Rod Assembly
3. Brake Pads

NOTE

Figure 4 is shown with the wheel and fender assembly removed for clarity.

Repeat the adjustment on the brake rod assembly on the other side of the tractor.

Recheck brake adjustment per **brake adjustment; check** and ensure proper brake operation before operating the tractor.

TRACTOR SERVICE MANUAL FOR GARDEN TRACTORS
S/N 737,625 - 799,999

SECTION 1. ENGINE

SECTION 2. CHASSIS

SECTION 3. DRIVE SYSTEMS AND HYDRAULICS

SECTION 4. ATTACHMENTS

SECTION 5. SAFETY

DRIVE SYSTEMS AND HYDRAULICS

Contents

	Page
Four-Speed Transaxles Series 2300	3-2 thru 3-8
Right Angle Drive For Four-Speed	3-9 thru 3-12
Six-Speed Transaxle	3-13 thru 3-24
Hydrostatic Transaxle	3-25 thru 3-35
Disc-Clutch for Six-Speed	3-36 thru 3-40
Hydrostatic Transmission (Sunstrand)	3-41 thru 3-58
Disconnect Clutch Kits	3-59 thru 3-63
Hydraulic Lift	3-64 thru 3-72

FOUR-SPEED TRANSAXLES

SECTION 1. 2300 SERIES

CAUTION

DECLUTCHING IS REQUIRED WHEN SHIFTING TO AVOID GEAR CLASHING AND DAMAGE.

GENERAL

The 2300 series transaxles have a four-speed forward and one reverse transmission.

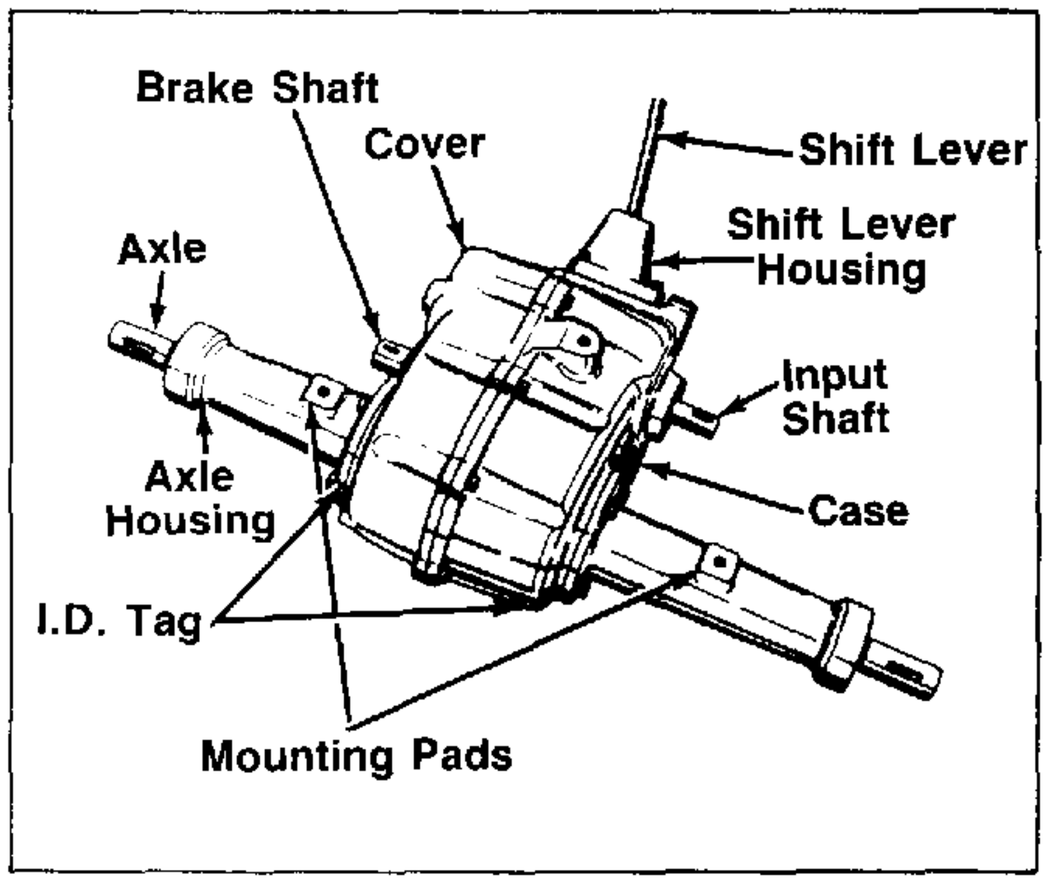

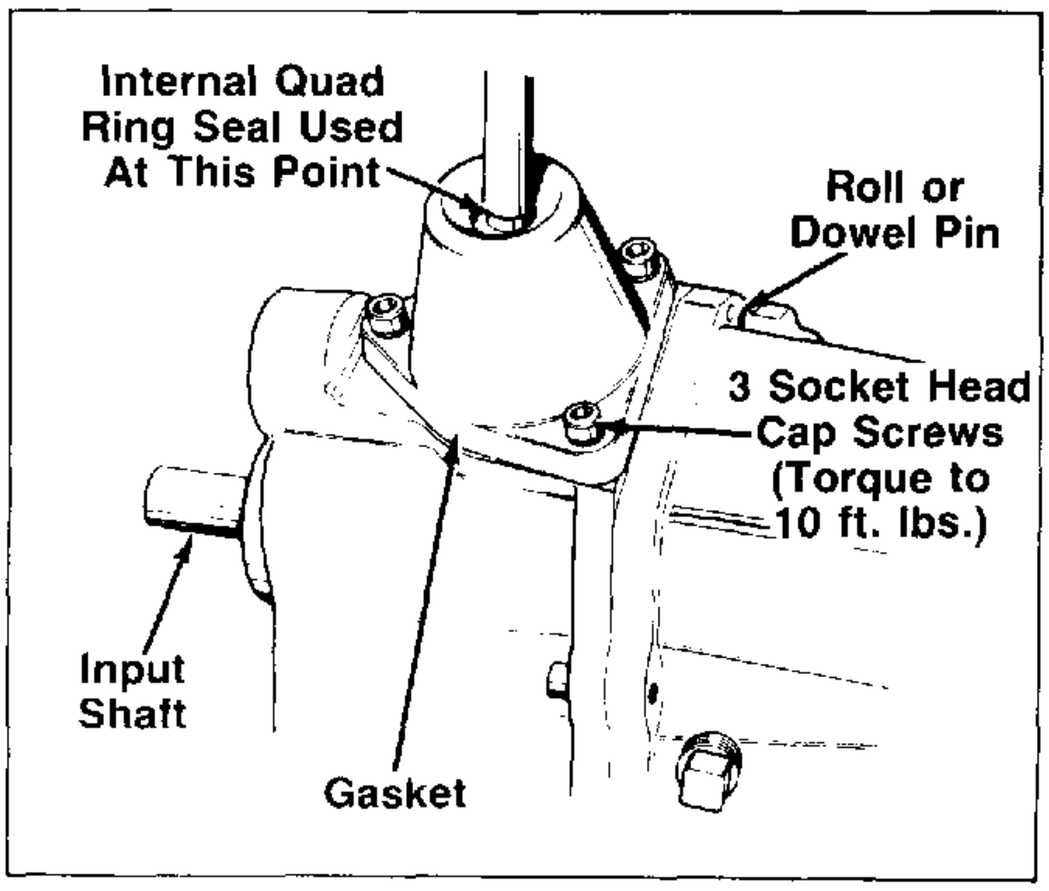

DISASSEMBLY

1. Position the shifter forks in neutral before disassembly.

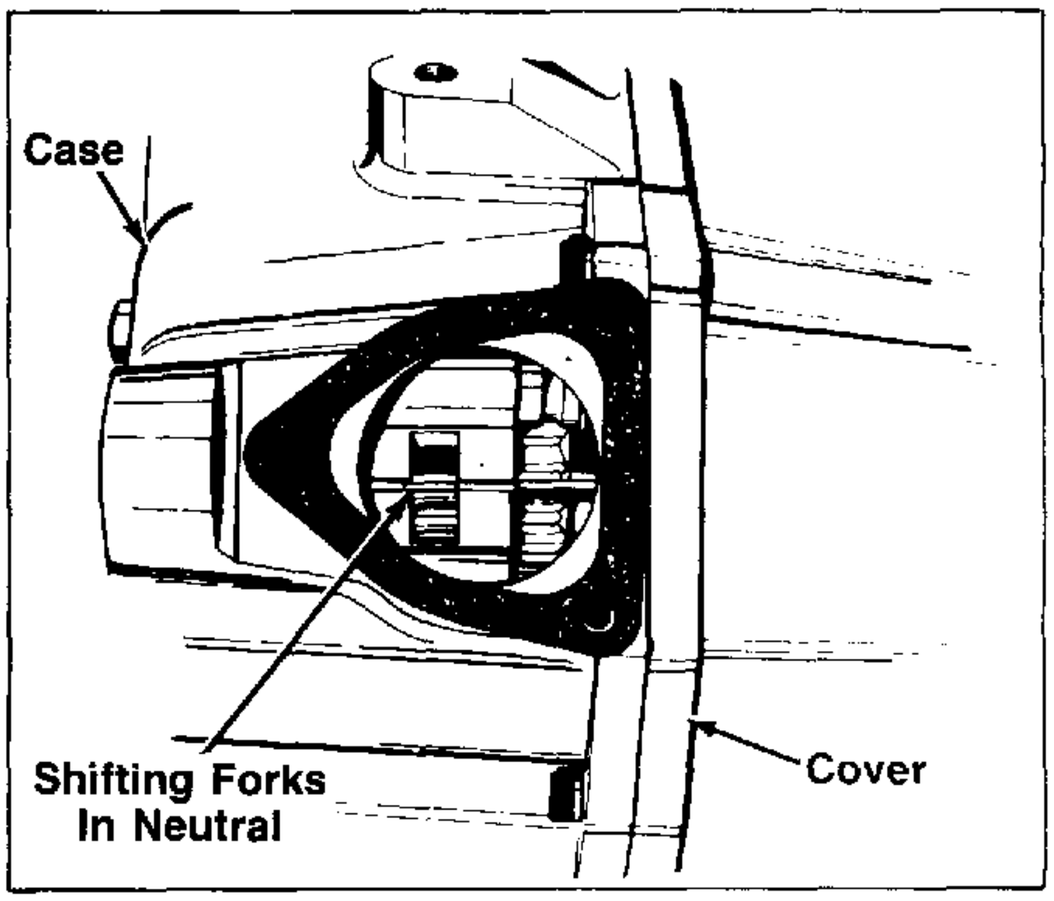

2. Remove both axle housings, and use the exposed axle as a ram to separate the seal retainers from the case and cover.

3. When disassembling the rest of the unit, it should be held so that;

   a. It lies on the cover, properly blocked up, so that no weight rests on the brake shaft.

   b. The cover should sit rigidly so that the removal of parts can be done in a systematic step by step procedure.

   c. It will not fall causing an accident or injury.

4. Oil seals are of the double lip type so sleeve protectors do not offer much protection when removing them. Upon replacement, new seals should be used.

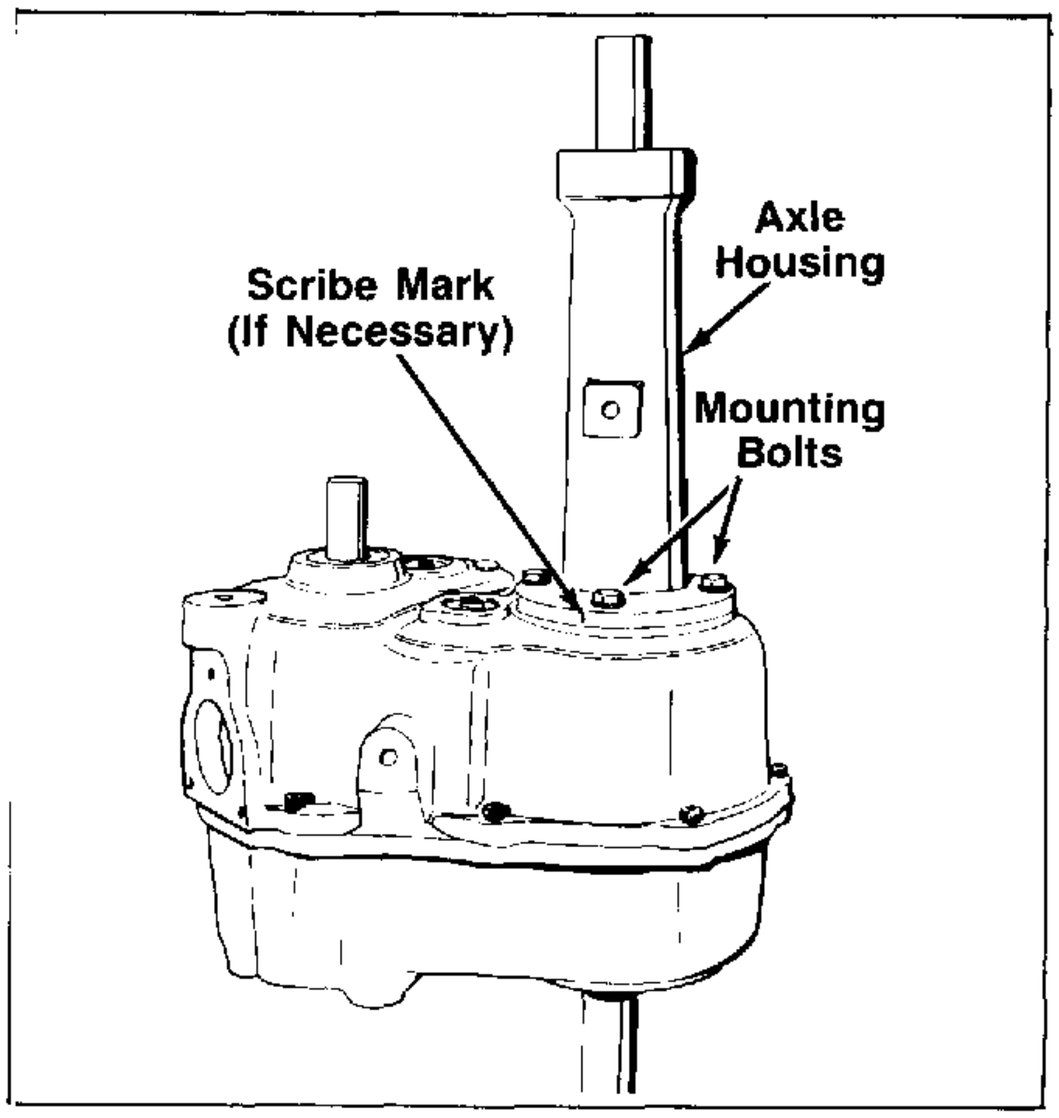

5. Tap dowel pins into the cover and remove eight socket head capscrews.

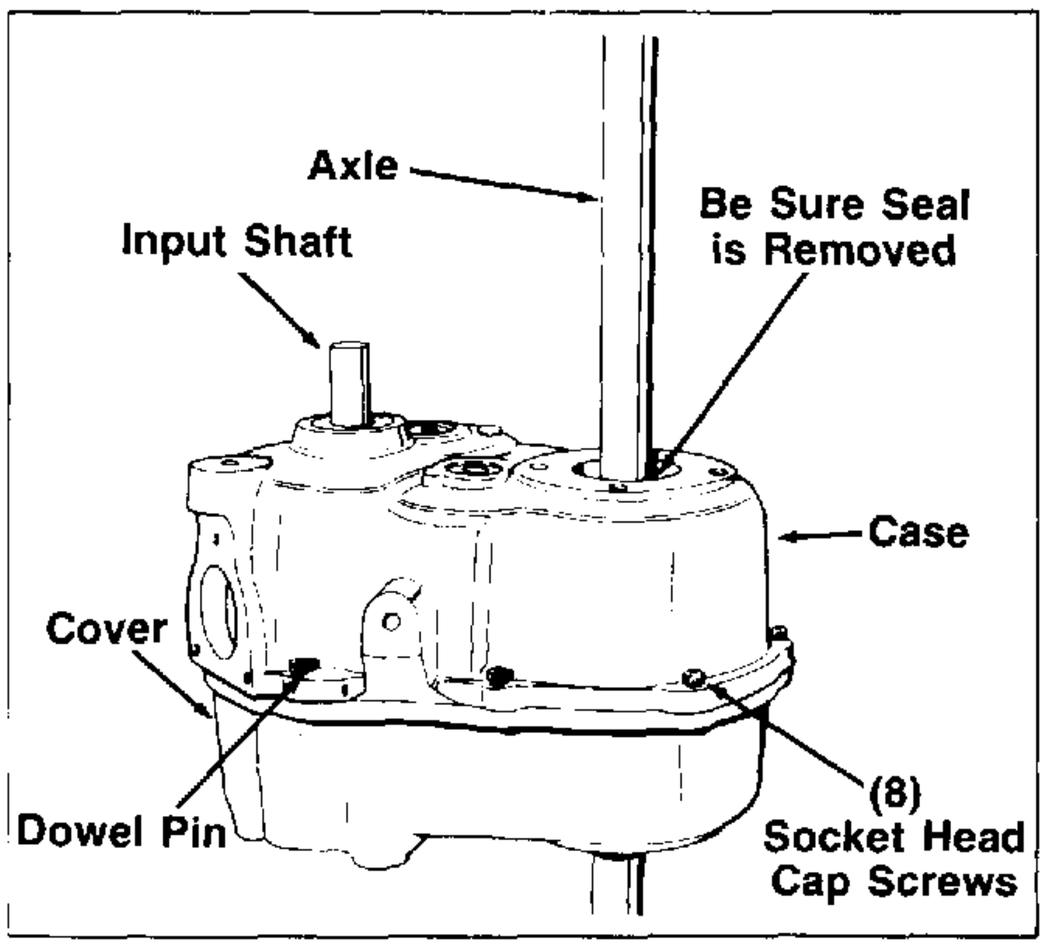

6. To separate the case from the cover:
   a. Lift the case 1½ to 2″ above the cover.
   b. Tilt the case so that the shift rods will clear edge.
   c. Rotate the case so that boss hidden inside will clear gears, then lift free of the differential.

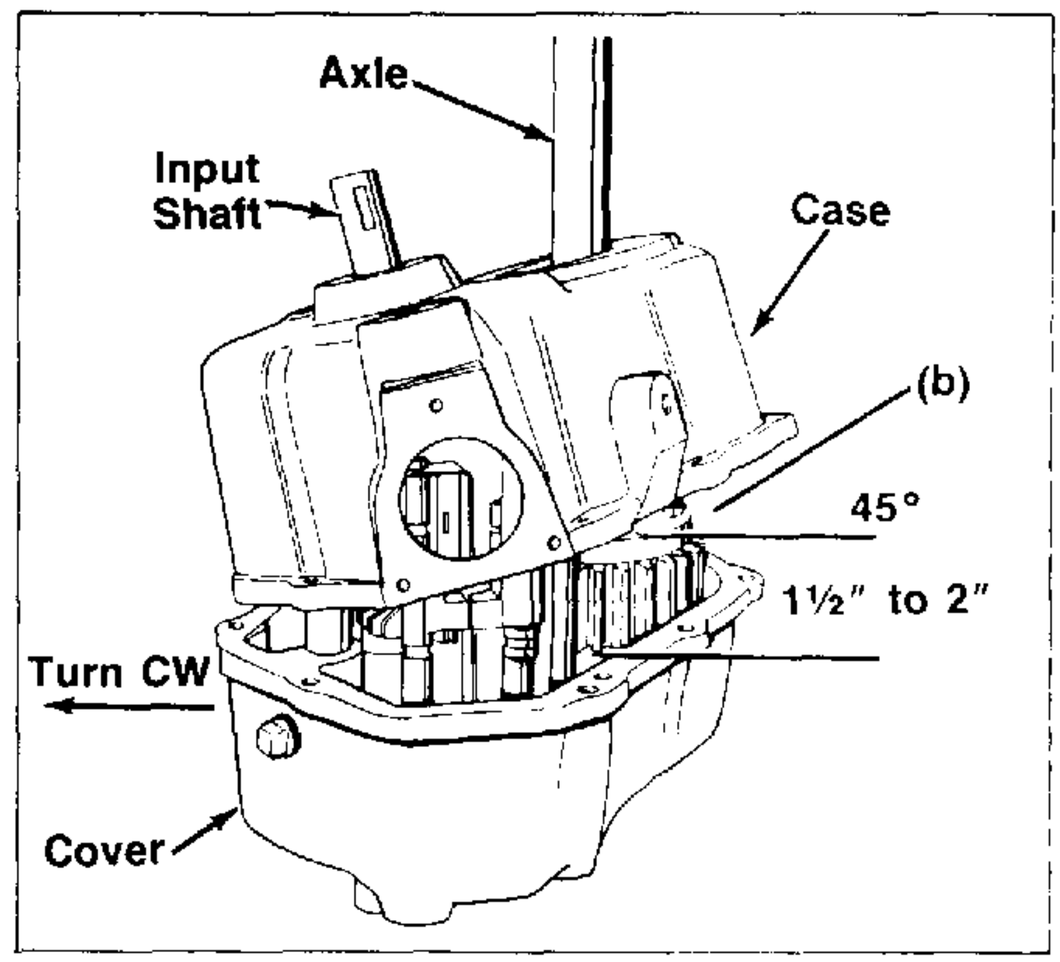

7. Remove thrust washer and three gear cluster from brake shaft, noting whether the cluster has a sloppy fit.
   a. To service the cluster bushings, refer to Chapter 11.
   b. Inspect gear teeth for wearing, chipping or breaks. Wear or chipping on the bevel area only indicates shifting while the equipment is in motion.

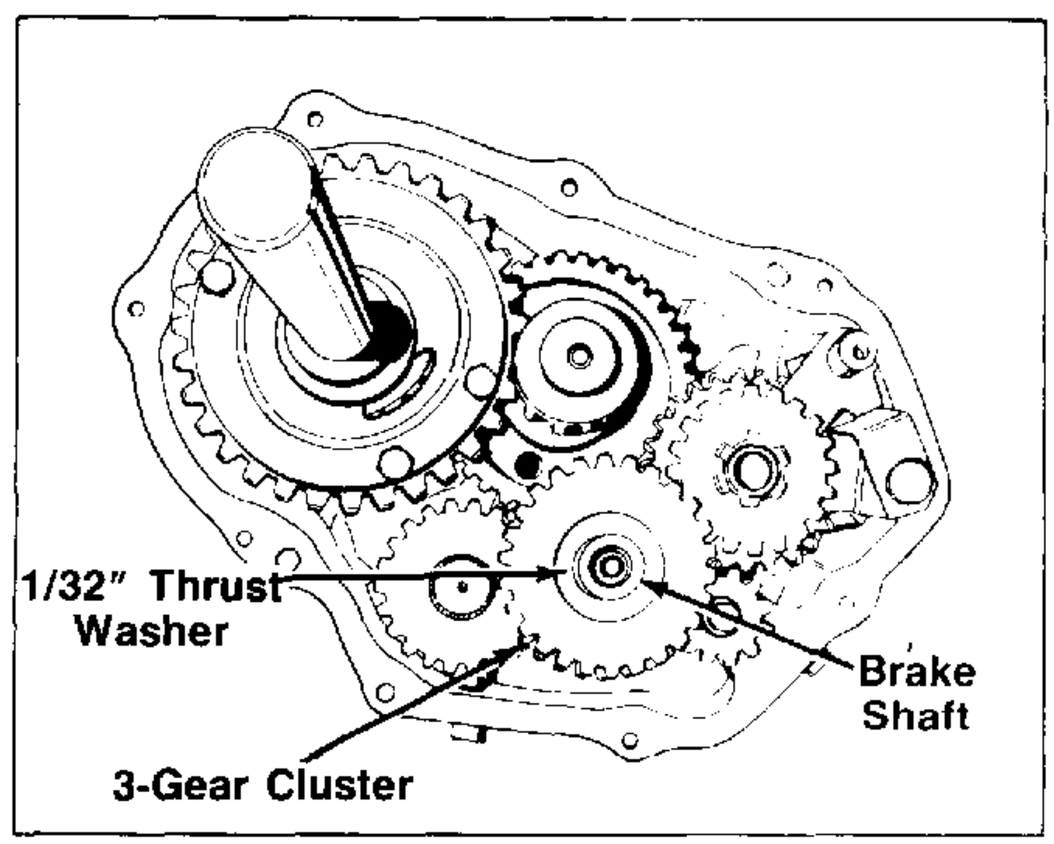

8. Remove the reverse idler gear, spacer and shaft from boss in cover.

   Note that the spacer goes between the gear and the cover, and that the gear bevels go down.

   Excessive wear on teeth bevels indicates improper shifting technique.

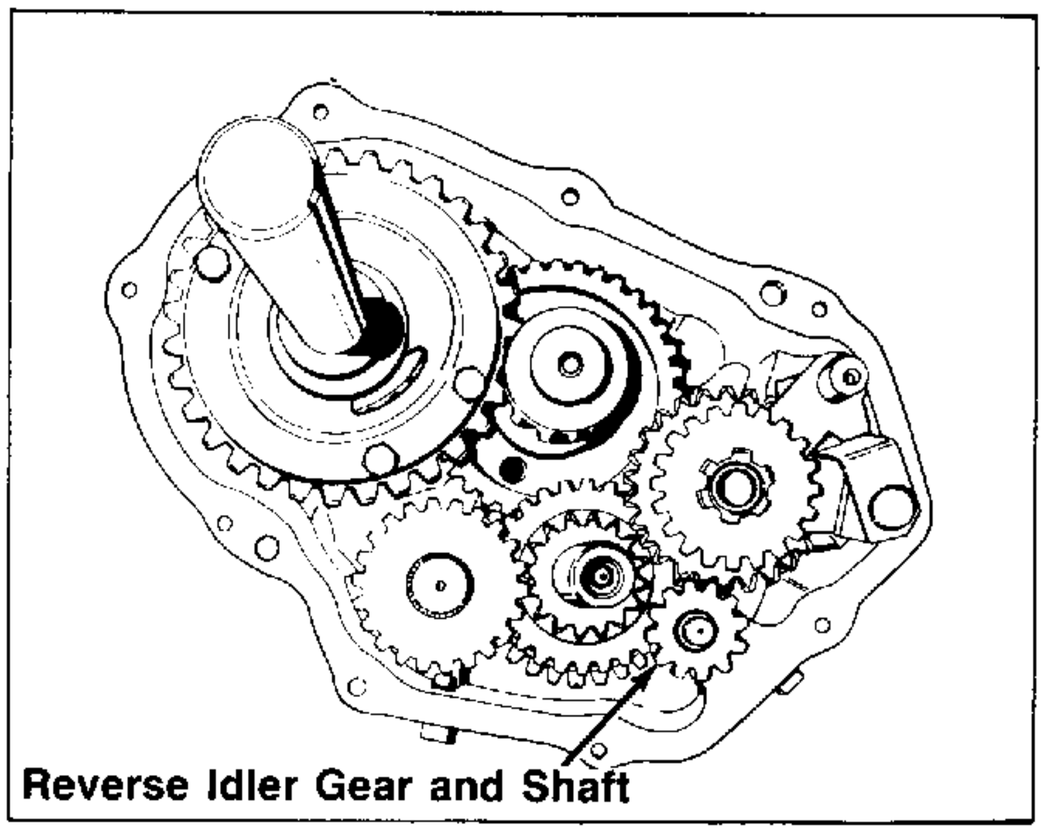

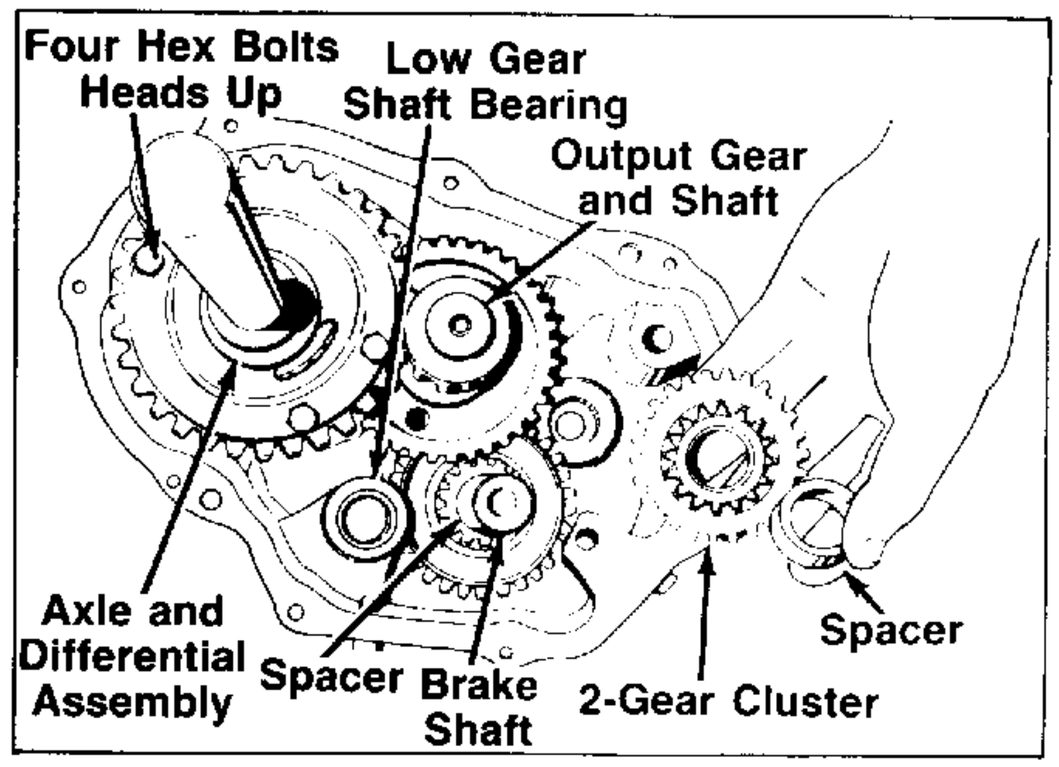

9. Lift out the shifter assembly. Service of this unit is described in Chapter 10.

   If it is evident that the shifter assembly needs no further teardown, place it aside in a clean place, intact, for easy reassembly.

10. Remove the low gear and shaft, and splined spur gear. Separate gear and shaft. Note that NO thrust washer is between the gear and case.

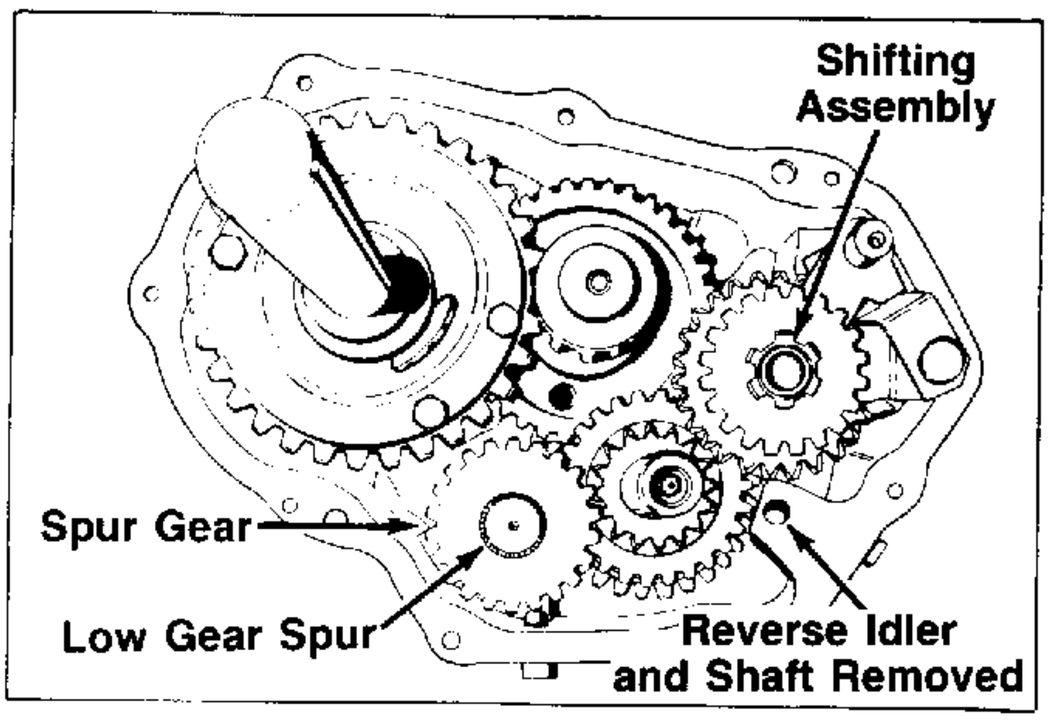

11. Remove the two gear cluster and spacer from the brake shaft.

12. Lift the differential unit out of the cover.

13. Remove the output shaft and gear and thrust washer from each end of the shaft.

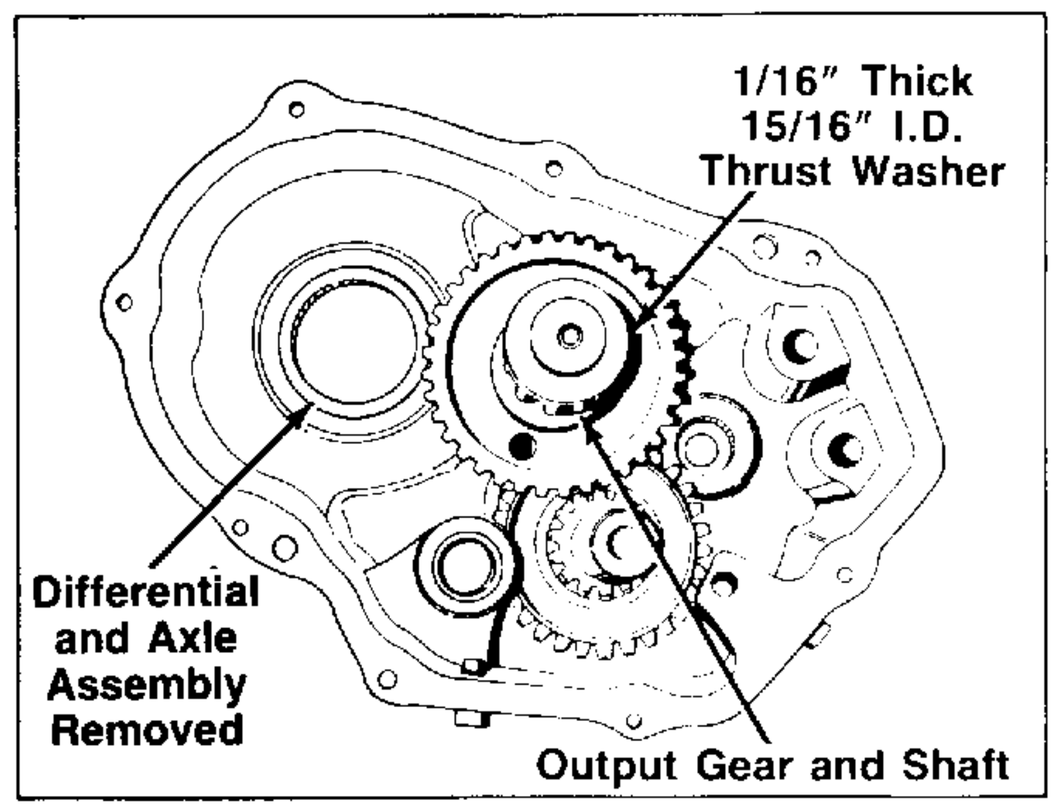

14. Remove the brake shaft.

    Note that the brake shaft idler separates from the shaft. If separated, be sure that when reassembled, the idler gear chamfers are away from the cover.

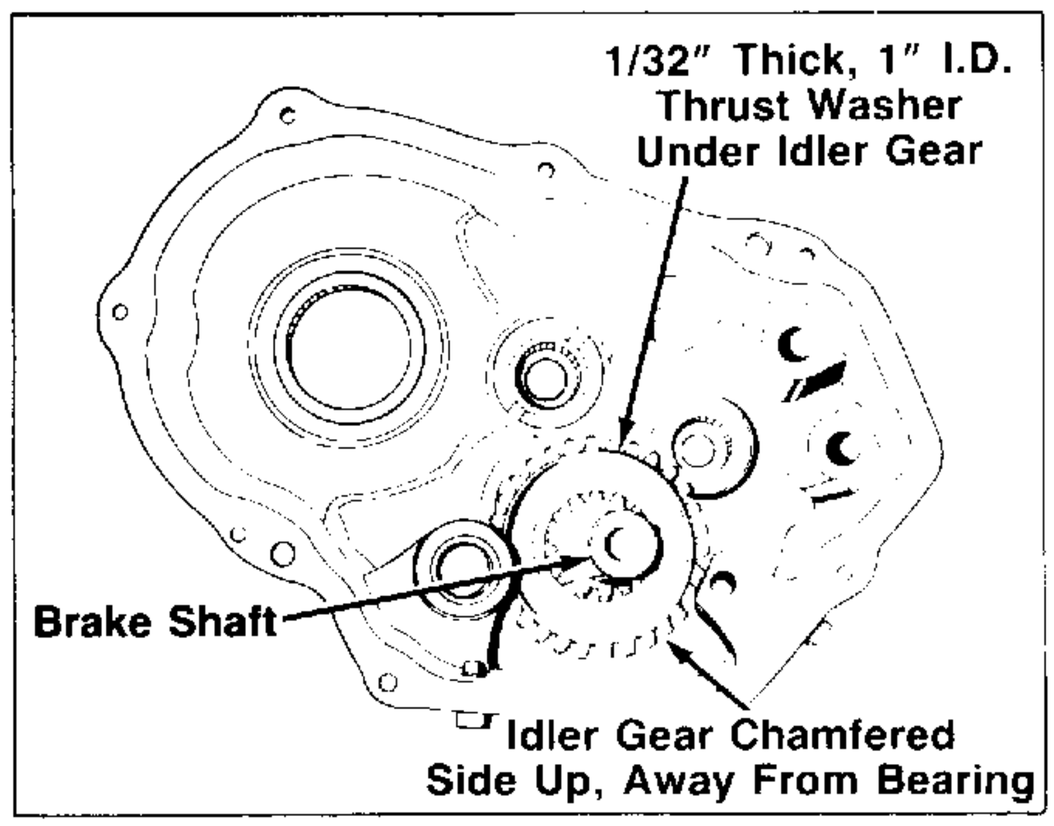

15. Remove input shaft from case by tapping with a non-metallic hammer.

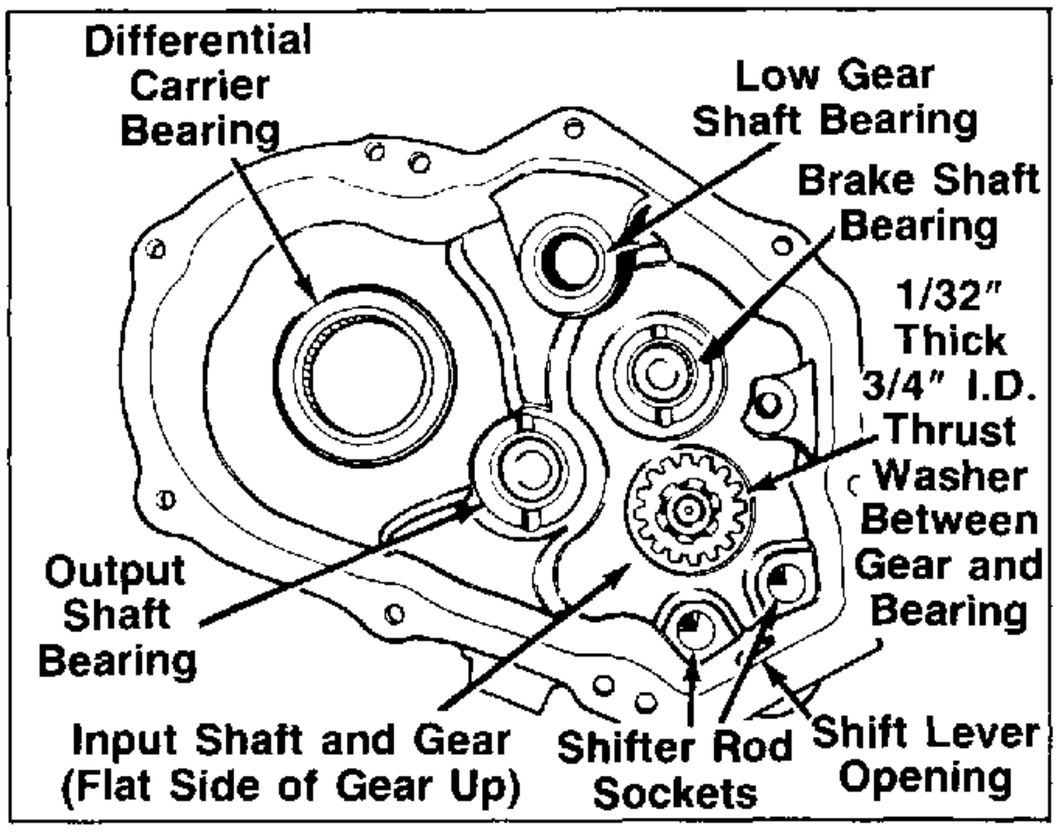

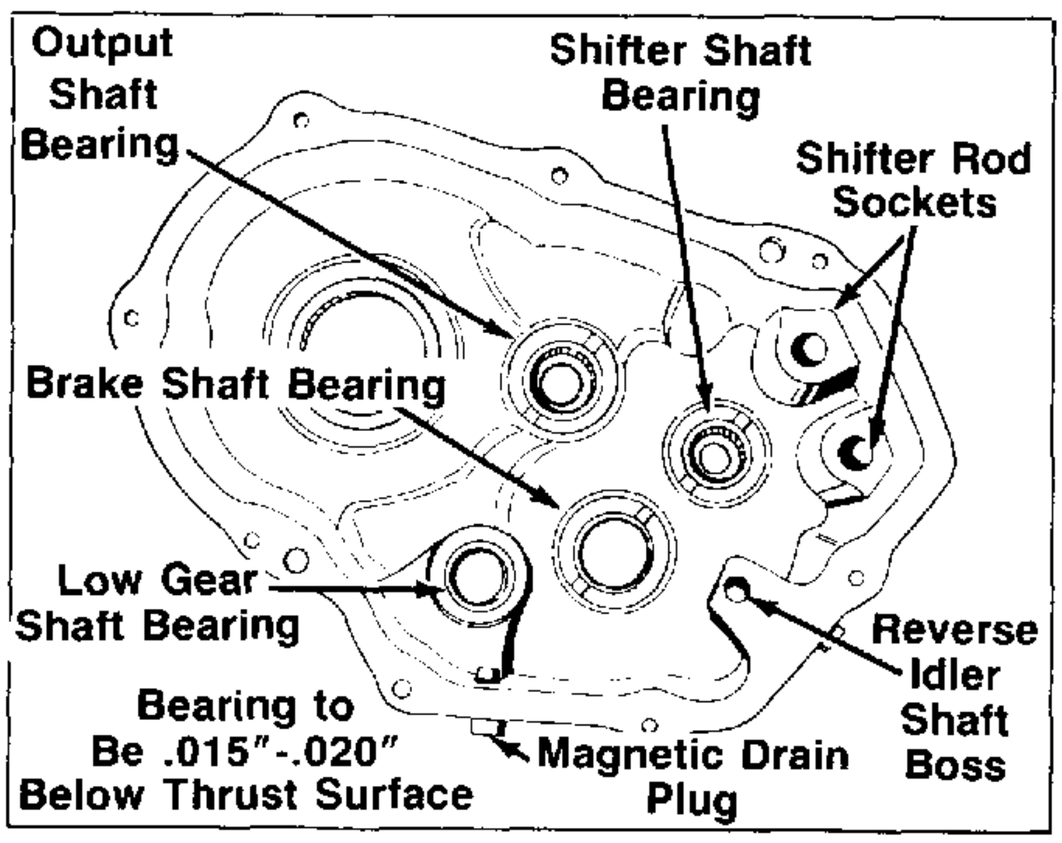

INSPECTION AND REPAIR

1. Gears.
   a. Check bevels for evidence of galling due to improper shifting.

      NOTE: Peerless transaxles must be stopped for shifting.

   b. Check face of teeth for wear. Large shiny areas indicate too much tooth contact and possible excessive wear. Replace gears indicating damage or excessive wear.
2. Shafts and Axles.
   a. Check surface for rust, pitting, scratches or wear.
   b. Check keyways, splines, threads, and grooves for wear. Replace parts if worn or damaged beyond a refinishable state.
3. Case and Cover.

   Check for cracks, stripped threads, metal chips, flat sealing surfaces and rust. Clean out any rust. Replace parts if any damage is found that cannot be repaired.
4. Thrust Washers and Spacers.

   Check for shininess indicating wear. Replace if wear is evident. Try to determine cause of thrust washer wear such as: lack of end play due to reuse of gasket, or use of wrong thrust washer.
5. Shifting Assembly.

   Refer to page 3-4.
6. Gaskets.

   Replace all gaskets.
7. Oil Seals.

   It is a good habit to replace all seals. It is necessary to replace all double lip seals. See page 3-7, "Oil Leaks, Seal and Gasket Service."
8. Bearings and Bushings.

   Refer to page 3-7.

ASSEMBLY

1. Install input shaft in case. Use a soft mallet to seat shaft and gear completely. Often, binding in the assembled unit can be traced to a partially installed input shaft.

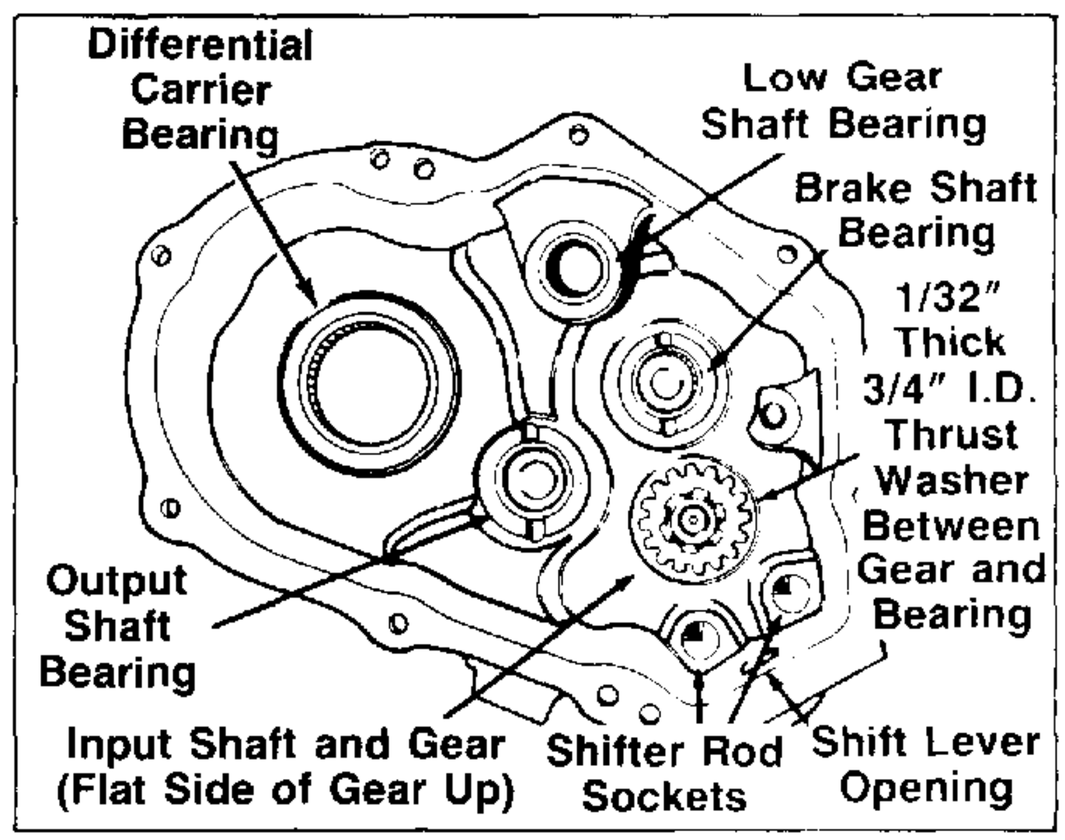

2. Center one 1/32" thick by 1" I.D. thrust washer on the cover brake shaft needle bearing, then install the brake shaft and gear (chamfer side away from cover).

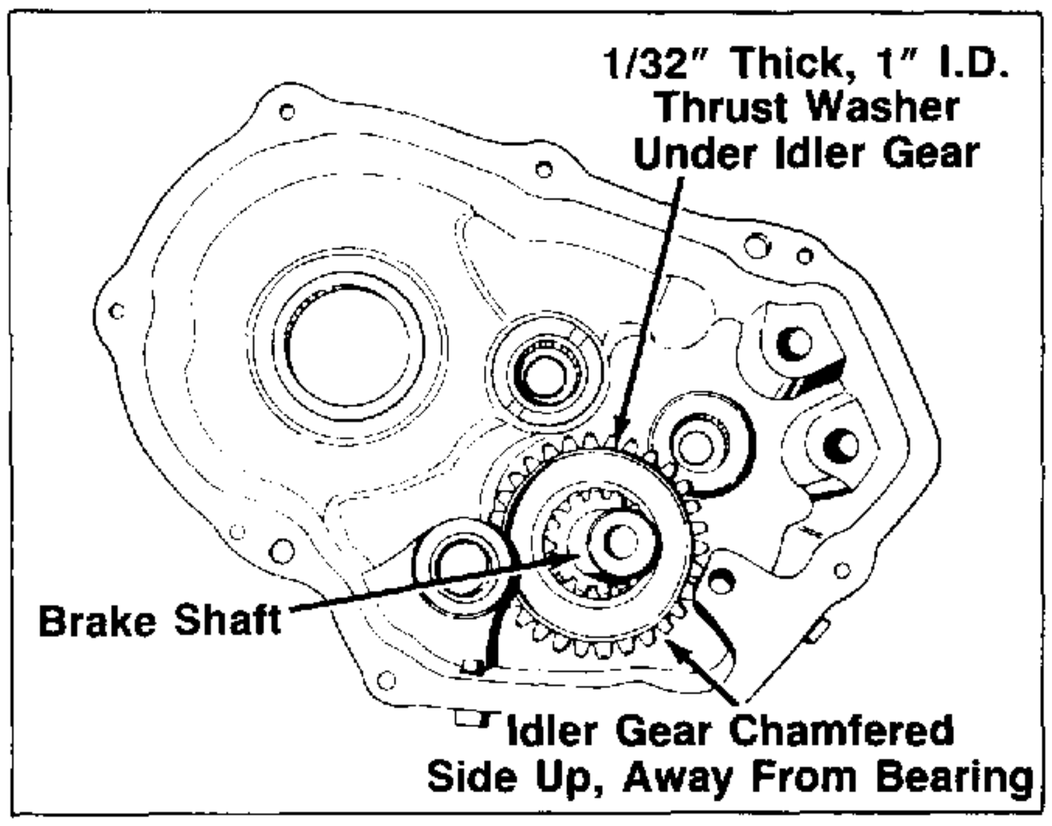

3. Install the output shaft and gear after centering a 1/16" thick by 15/16" I.D. thrust washer on each end of the shaft.

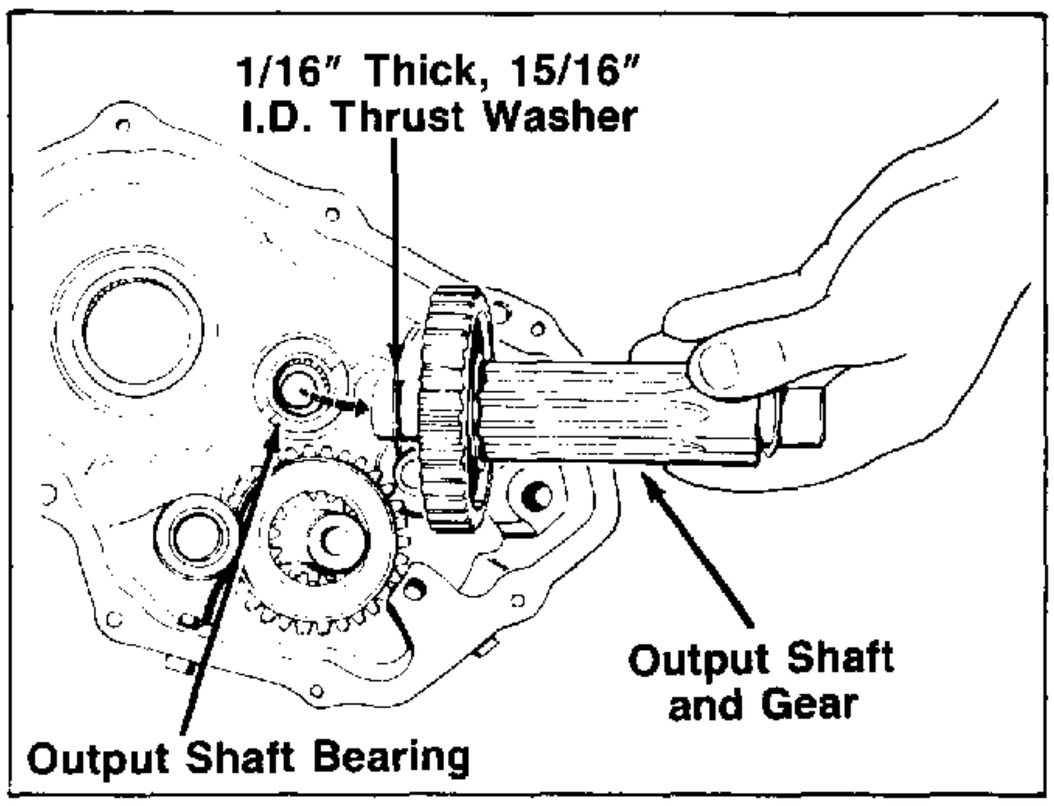

4. Insert the differential assembly into the cover. Note that the four bolt heads should be out away from the output gear.
5. Install the two gear cluster and spacer on the brake shaft.

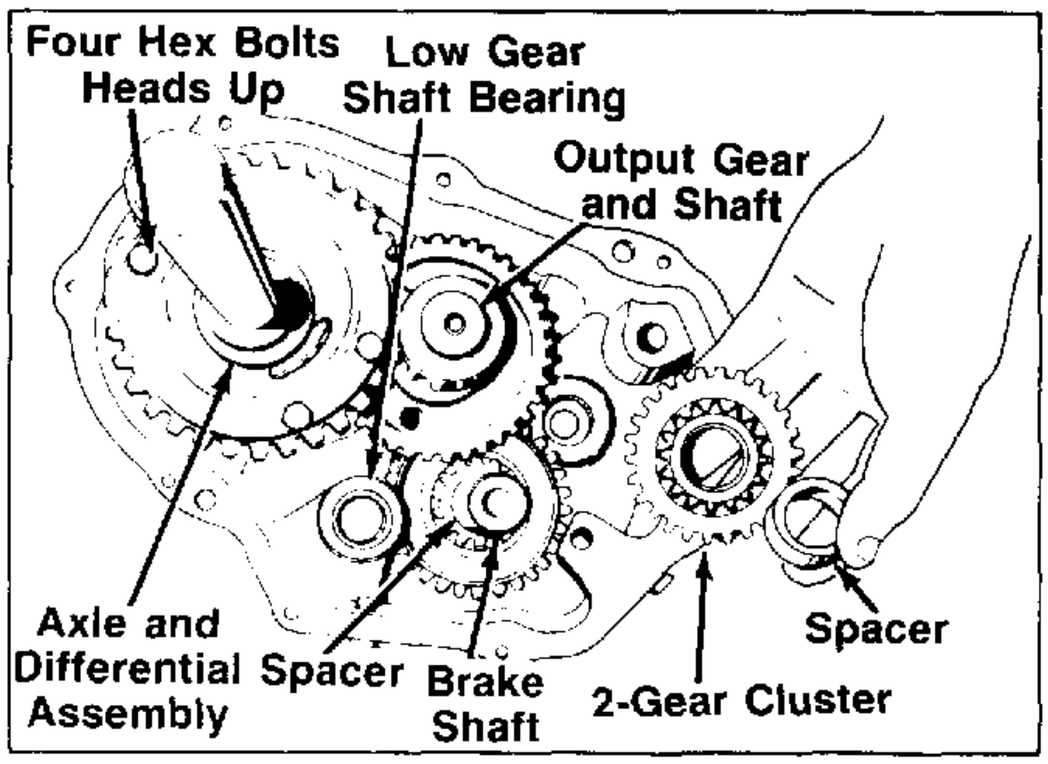

6. Install a 1/16" thick by 3/4" I.D. thrust washer, gear and low gear idler shaft in cover. Do not put a thrust washer on the exposed end of this shaft. Be sure the small gear meshes with the larger gear of the two gear cluster.
7. Center one 1/32" thick by 7/8" I.D. thrust washer on cover shifter shaft bearing.
8. Install shifter assembly as a unit into the cover.

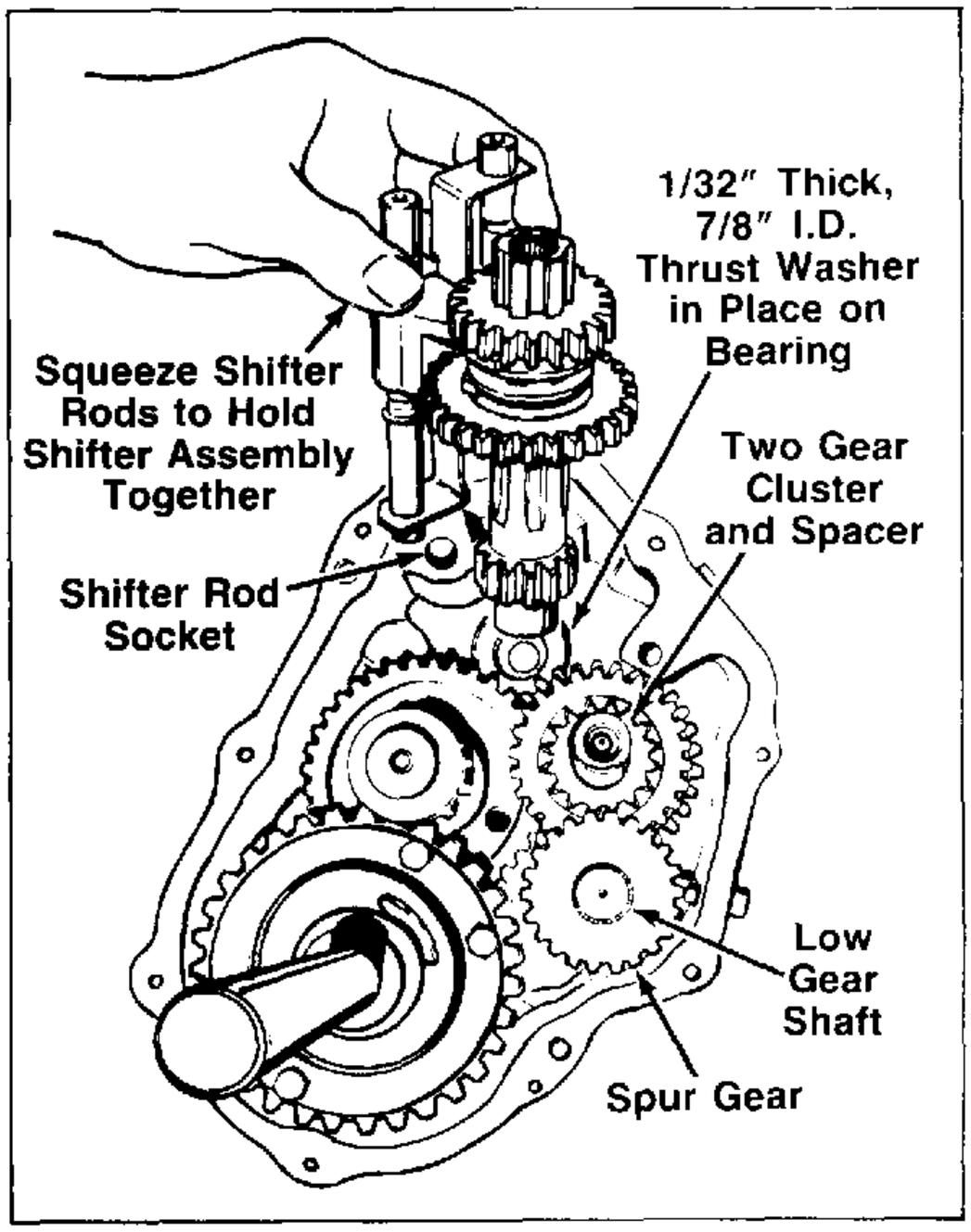

9. Install the reverse idler shaft, spacer and gear into the cover. The beveled side of the idler gear should be down into the cover.

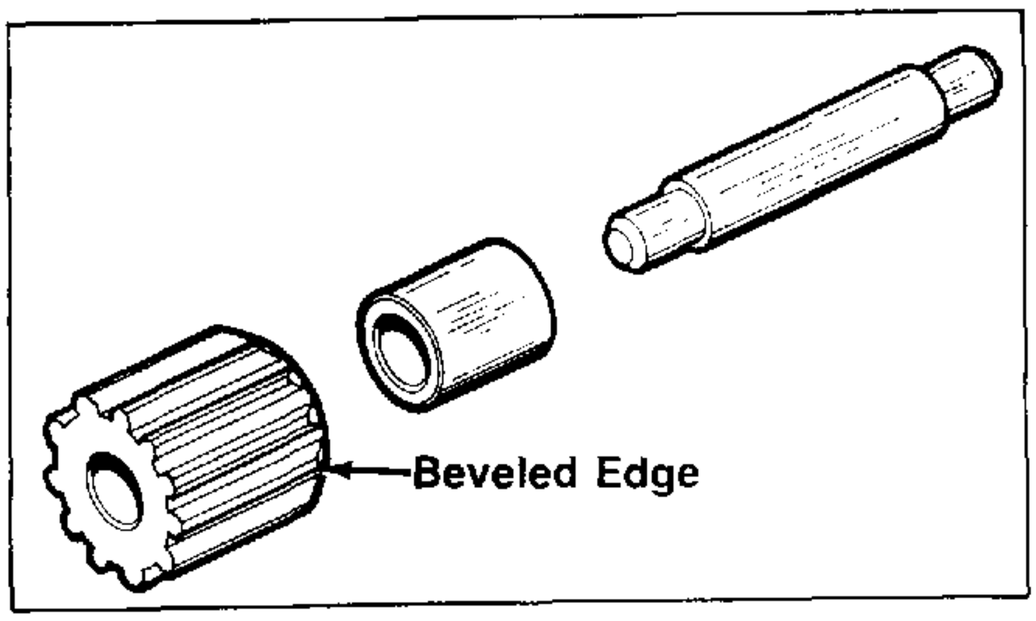

10. With the small gear of the three gear cluster toward the spacer, install the three gear cluster and other 1/32" thick by 7/8" I.D. thrust washer on the brake shaft.

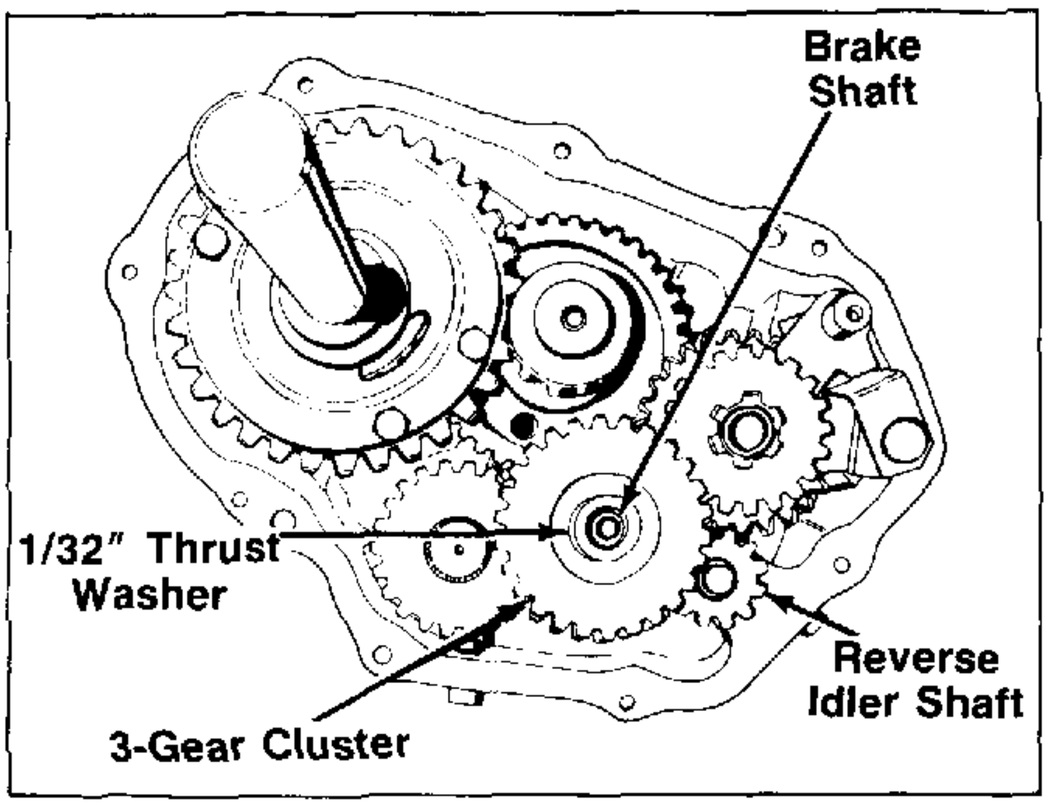

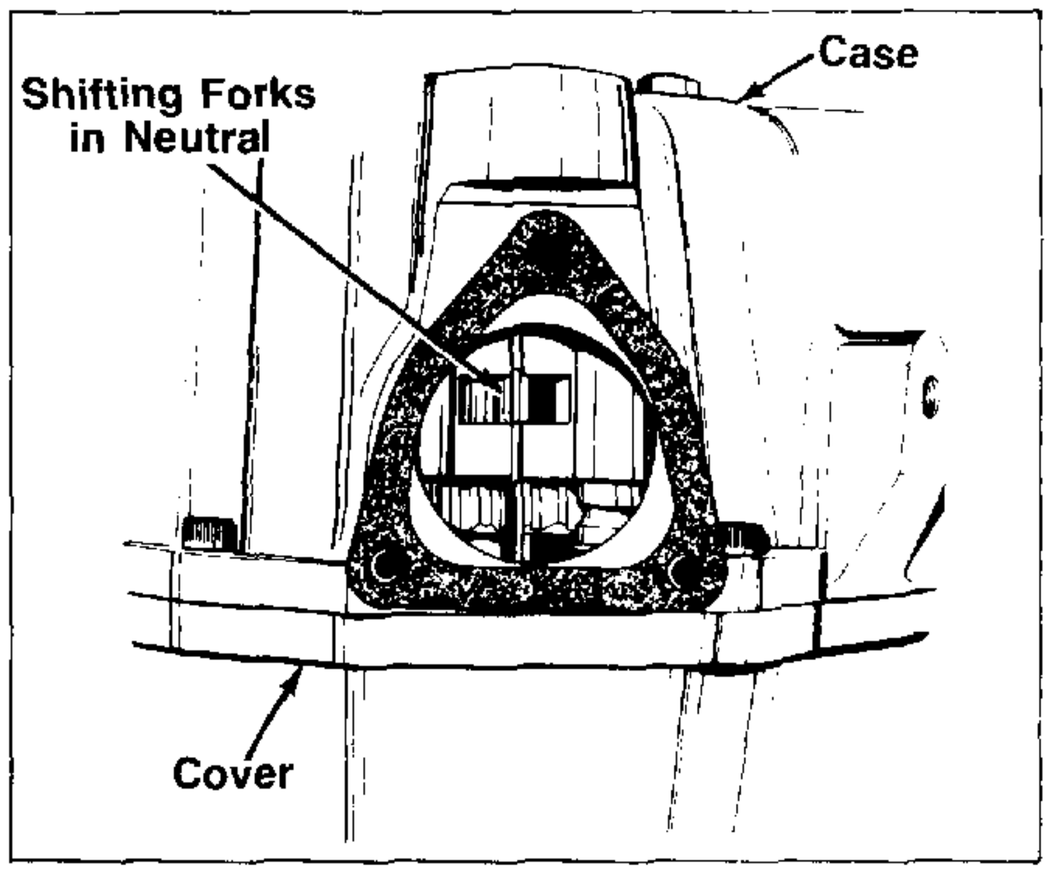

11. Position the gasket on the cover sealing surface, then install case over the differential shaft. Be sure the boss goes under gears and that edge of the case goes over the shaft rods in the opposite manner from which it was removed.

12. Once in position, if case hangs 1/2 to 1" high, turn the input shaft to get gears to mesh. The case should drop about 1/4" from closing.

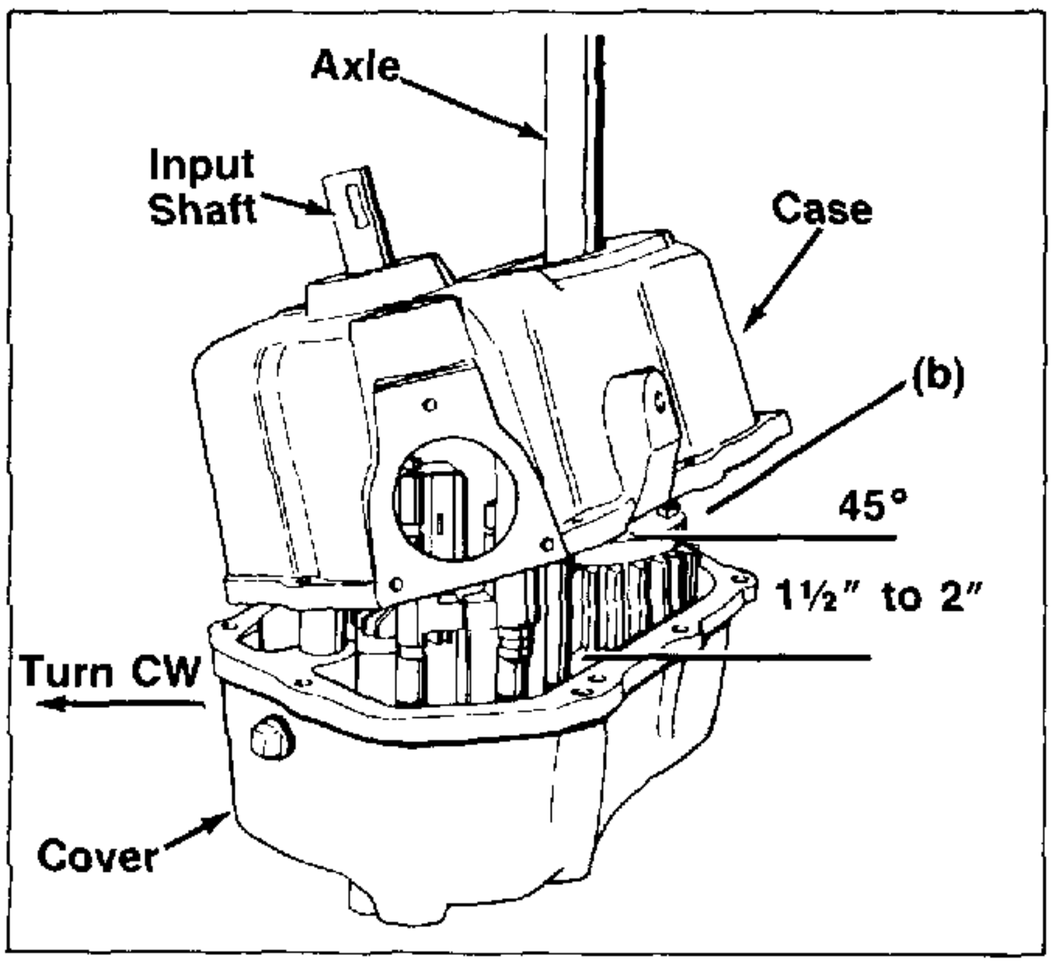

13. Use a pair of needle nose pliers on the shifter stop on each shifter fork to agitate the shifter rod ends into their machined recesses in the case.

14. Align the case and cover with the two dowels then install and tighten the eight socket head capscrews. Torque screws to 10 ft. lbs. Unit can now be placed flat on the workbench.

    Place seal retainers and new seals in position.

    CAUTION: Sleeves must be used to protect seals, especially axle ends or where wheels attach.

15. Install new O-rings on seal retainers and position axle supports to case and cover. Be sure mounting pads face in the same direction as when removed. Install capscrews and torque to 13 ft. lbs.

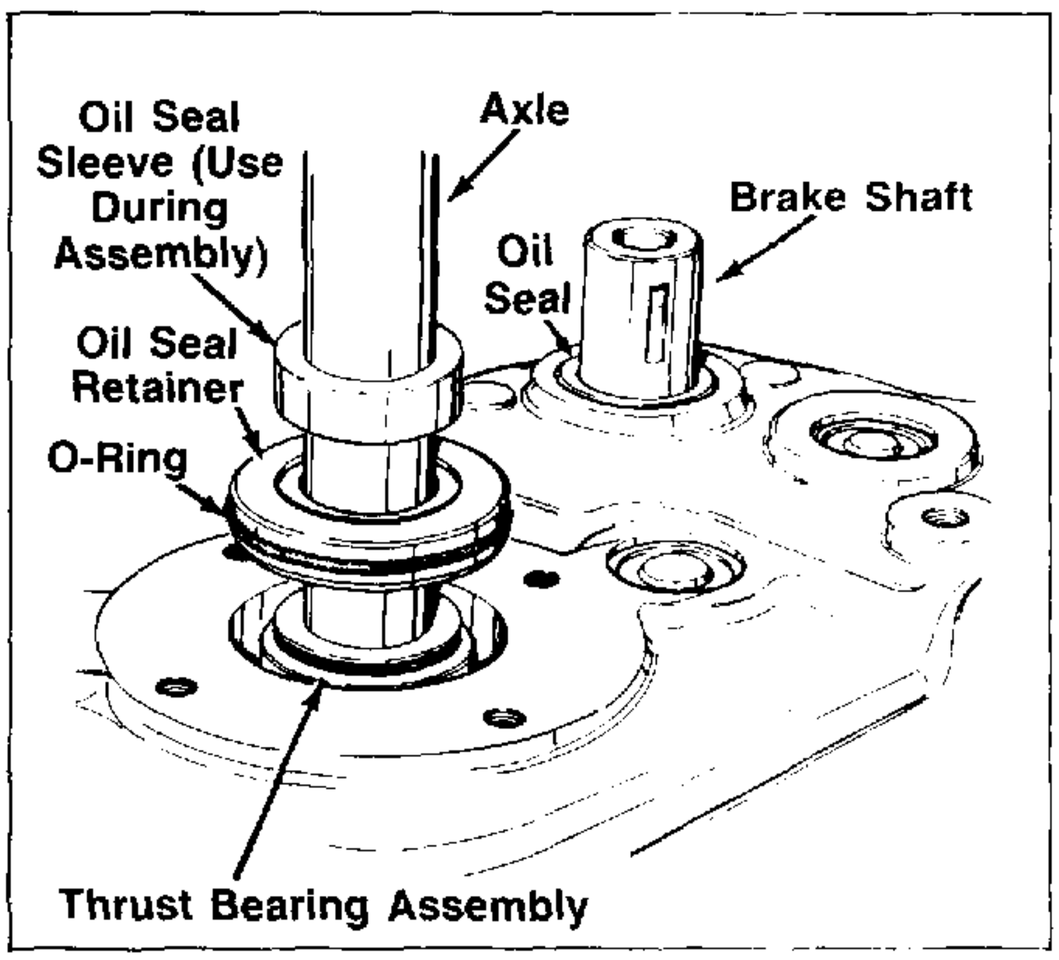

16. Install shift lever housing and new gasket.

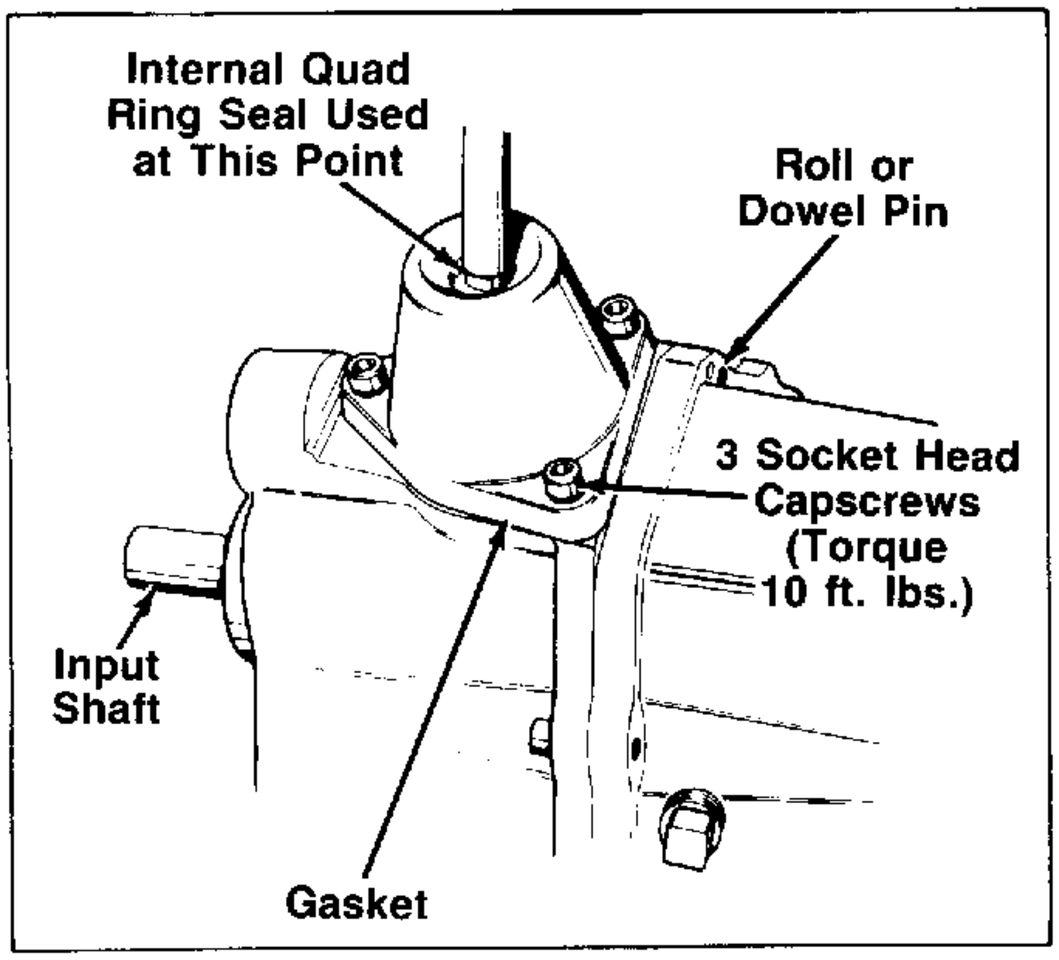

TESTING AND LUBRICATION

1. For testing, refer to page 3-9.
2. For proper lubrication type and amount, refer to page 3-9.

RIGHT ANGLE DRIVE FOR FOUR-SPEED TRANSAXLE

Leaking lubricant: Correct lubricant leakage by replacing the seals at the input and output shaft as described below.

1. Input shaft seal replacement: Remove four screws and the cover. Replace the seal by driving in squarely so that it is .040″ to .050″ below flush. Use tool 670185 to protect the seal when replacing the cover and seal assembly over the input shaft. Place the seal sleeves on the shaft and coat with oil. Slide the sealed retainer over the sleeve. Tighten the seal retainer screws and remove the sleeve.

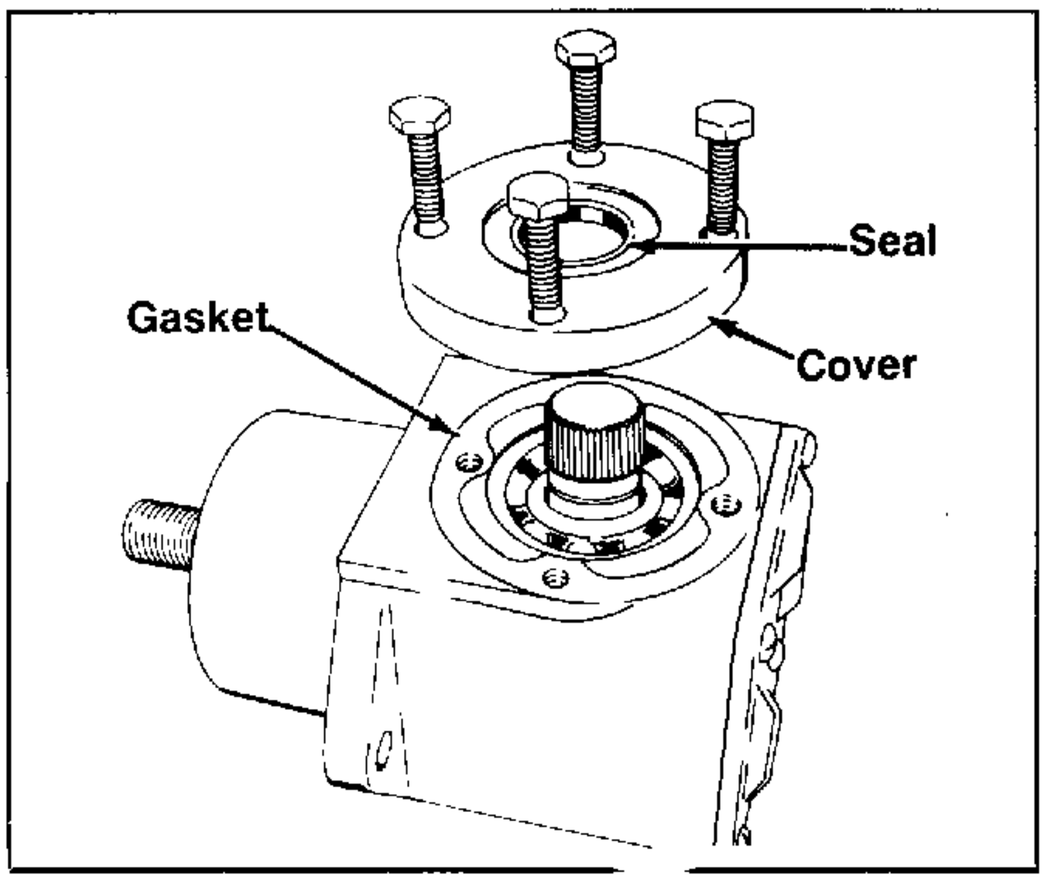

2. Output shaft seal replacement. Remove the seal by punching two small holes in the seal with an awl, as close to the outer edge of the seal as possible and opposite each other. Use care when making holes in seal so that ball bearing underneath is not damaged. Do not use a drill. Insert sheet metal screws into the holes and pull on the screws to remove the seal. Long screws may be turned in until they contact the outer race of the ball bearing and turned to lift out the seal. Place seal sleeve 670185 on the shaft, lubricate generously with oil and slide on the seal. Drive the seal into the housing until it is flush with the bottom of the housing. Use driver 670227.

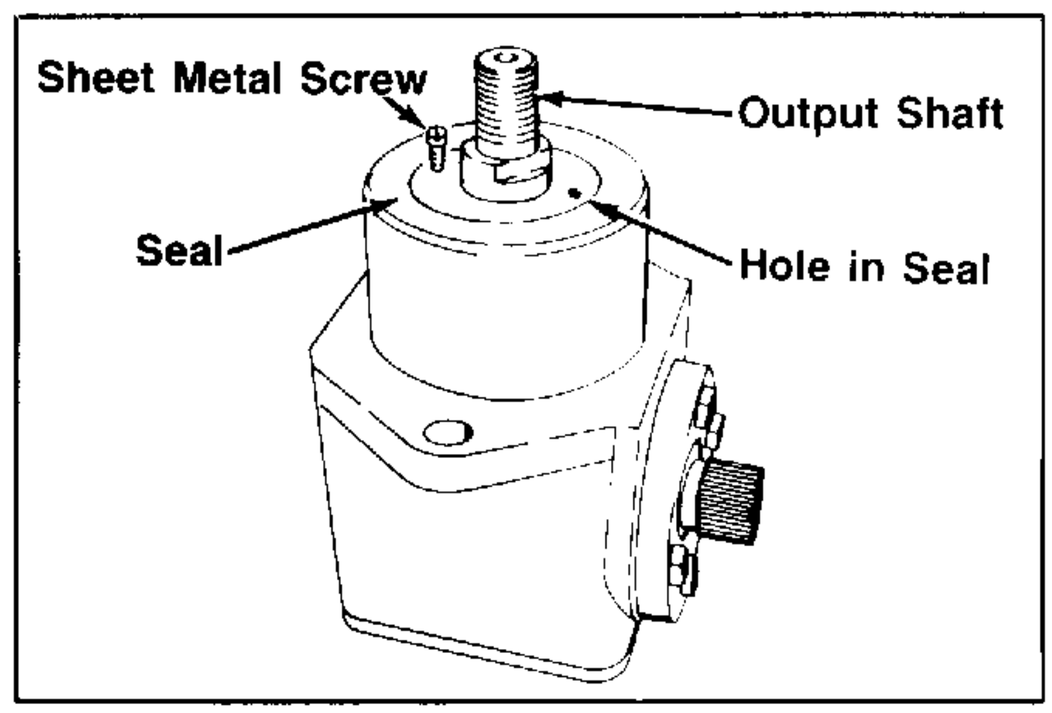

DISASSEMBLY

1. Remove the cover, gasket and lubricant.
2. If the unit is built with the bevel gear on the input shaft toward the cover, remove the snap ring on the input shaft from the groove.

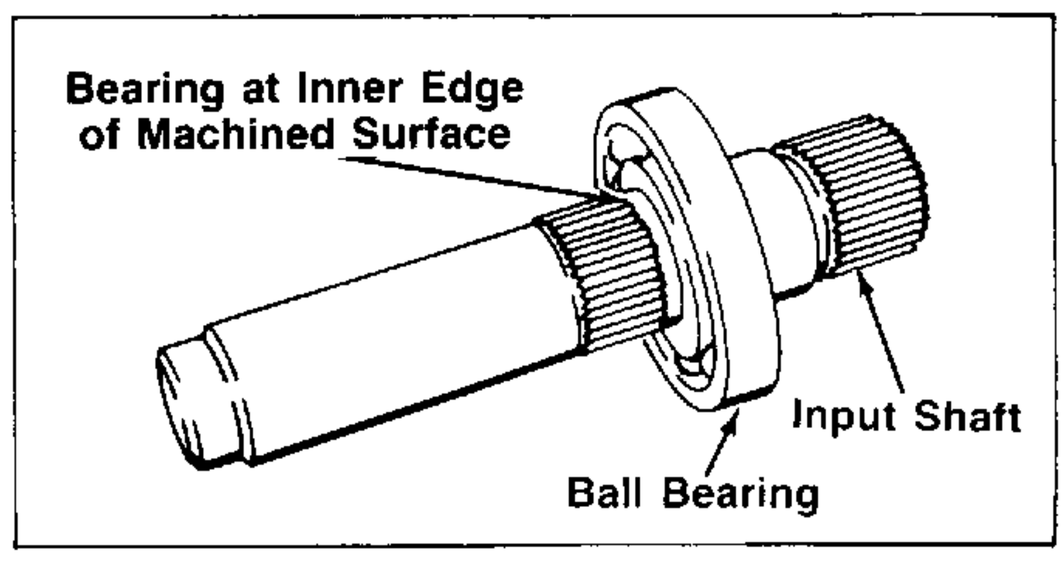

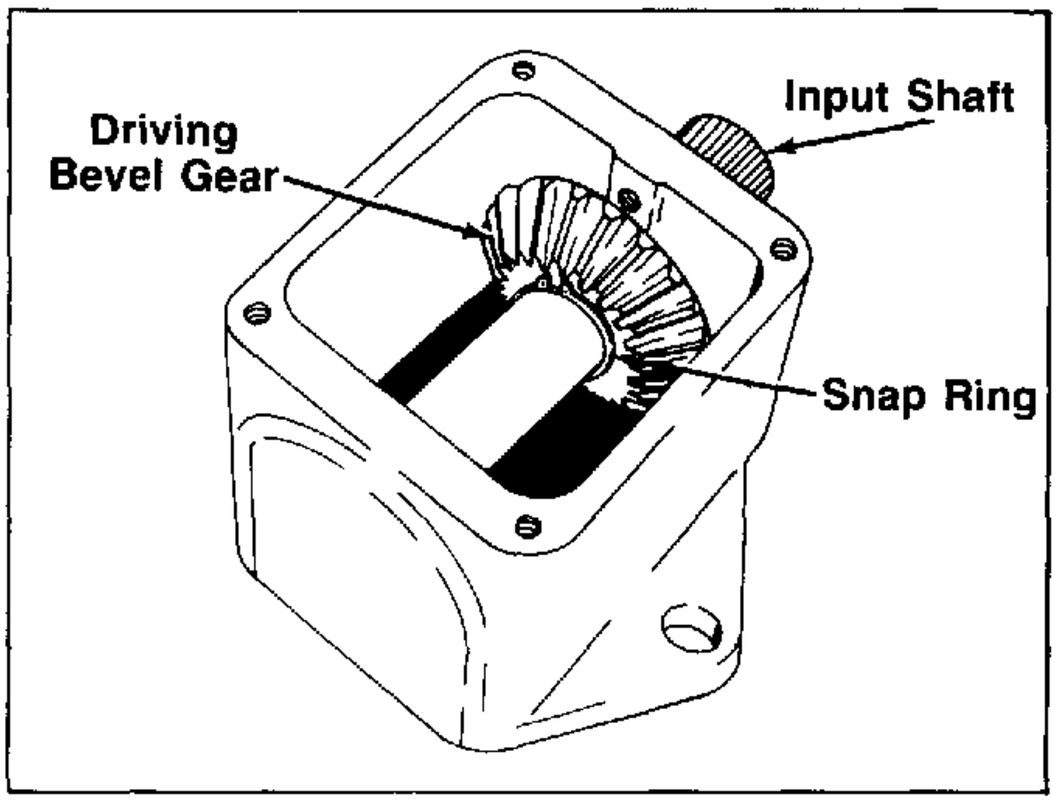

3. Remove four screws and the cover and seal assembly.
4. Remove the seal at the output shaft.

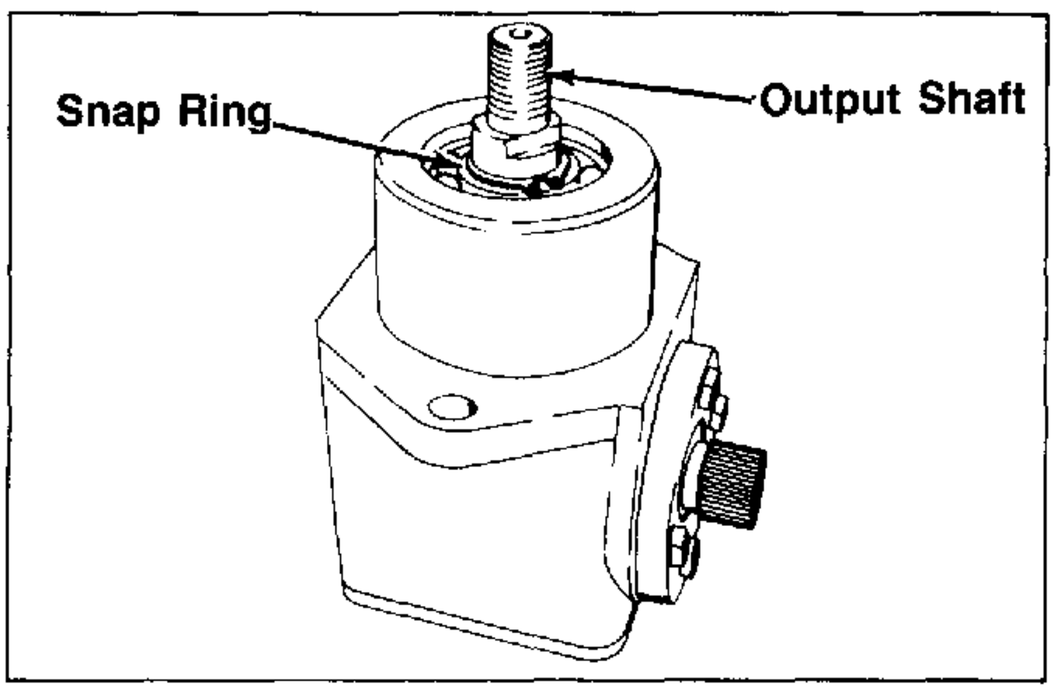

5. Remove the snap ring on the output shaft and tap it with a mallet on the outside end to drive it and the inner ball bearing out of the housing. Remove the output end ball bearing by driving it out from the inside.
6. Remove the input shaft from the ball bearing, with an arbor press. Always support the inner race when removing and replacing the input shaft into the ball bearing. Use tool 670185 to support the inner ball bearing race.

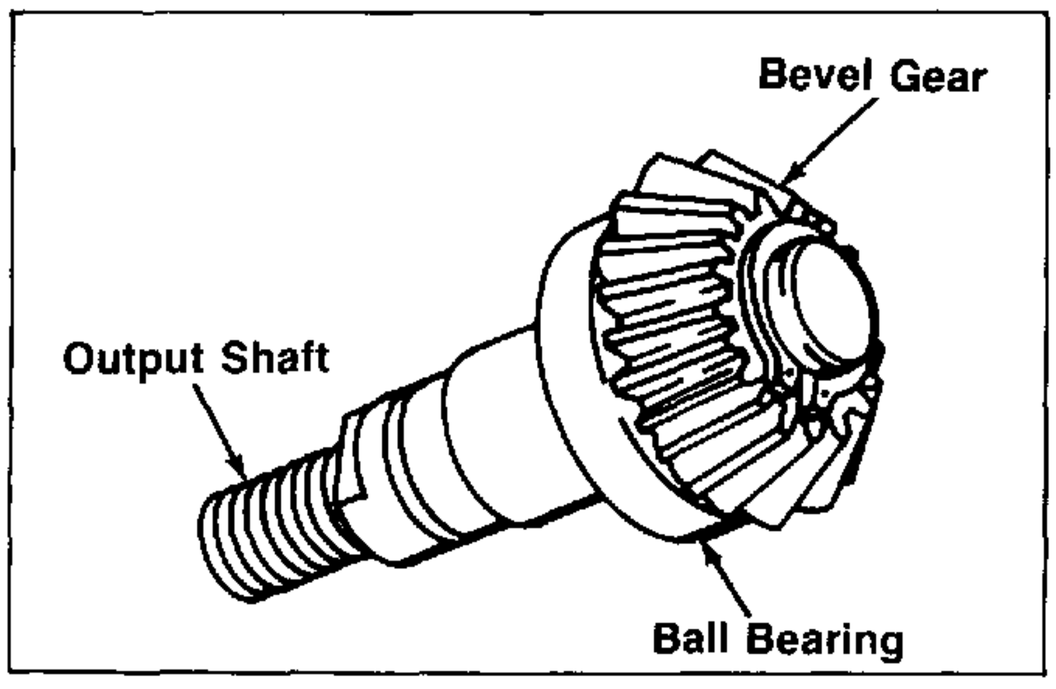

7. The ball bearing that supports the inner end of the input shaft is removed by holding the housing in the hand and tapping the housing sharply on the outside with a soft mallet behind the bearing. It may at times be necessary to heat the housing to remove this bearing.

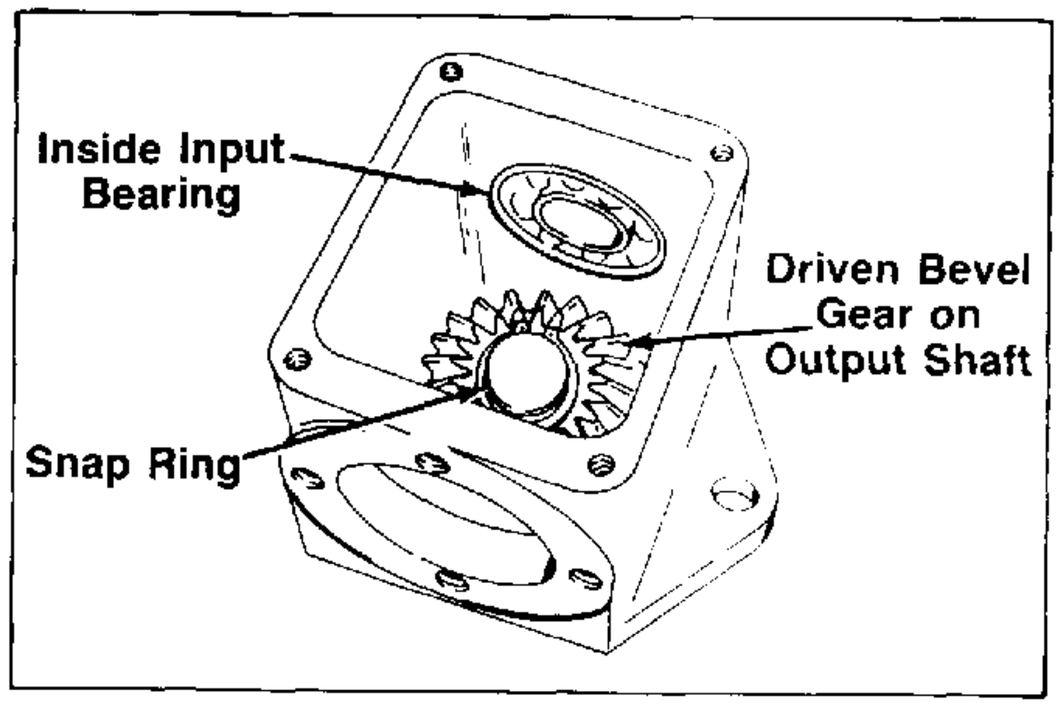

INSPECTION

Clean all parts in cleaning solvent. Examine for wear or damage and replace as needed. Use care when handling ball bearings. See Chapter 11, Bushing and Bearing Service.

REASSEMBLY

Assemble the unit in reverse of the disassembly. When building up the units, it is important to install the correct input shaft, and identify it with the correct cover, if there is any identification on the cover, either R.H. or L.H. Use tools 670227 and 670158 to support bearings being pressed on shafts or into housing.

LUBRICATION

After assembly, fill unit with four ounces of Moly E.P. Lithium grease. This grease is obtainable at automotive service stations. It is the type of grease used for extended period automotive chassis lubrication.

"T" DRIVE SERVICE

1. Before removing "T" Drive from equipment, be sure to scribe marks at one mounting hole to insure correct reasembly.

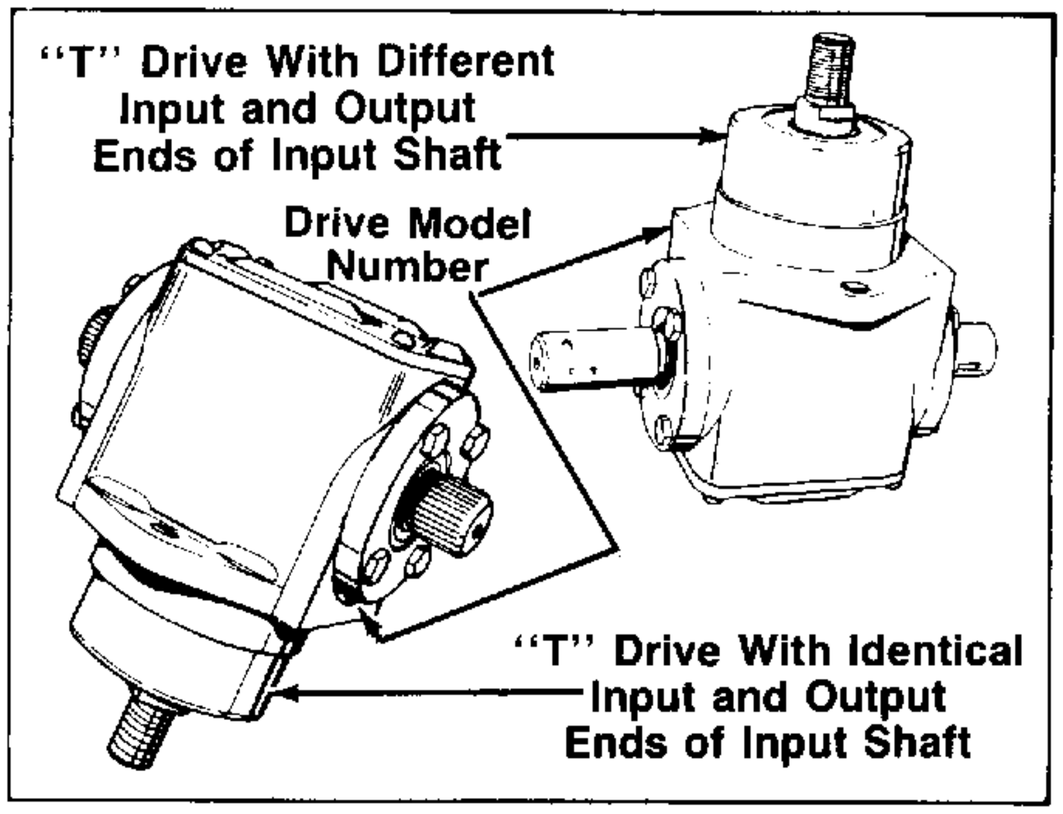

2. To disassemble "T" Drive, remove self-tapping screws and housing cover and clean grease from internal area. Note and mark near the casting gasket surface on the side where the beveled input gear is located. To switch the "T" 180° will result in output shaft opposite rotation.

3. Remove capscrews and both retainer cap and seal assemblies. Separate and discard oil seals and gaskets.

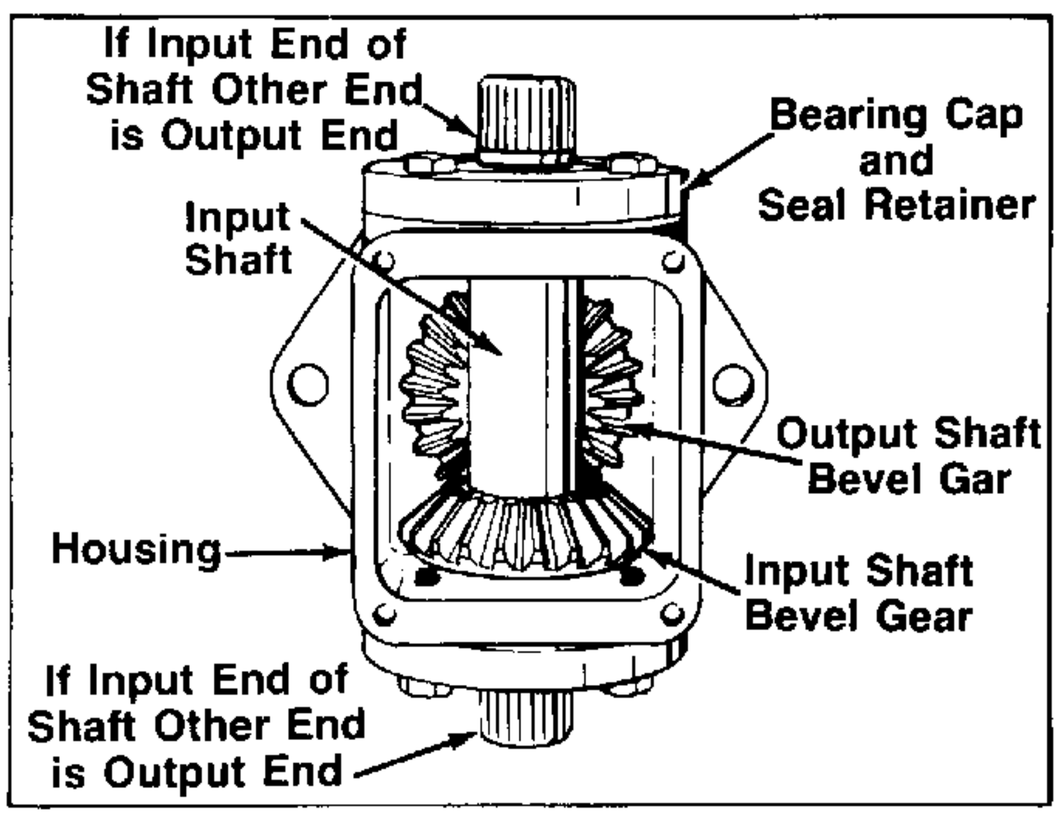

4. Press input shaft ball bearings out of the housing with fingers. If they stick, tap lightly using a drift punch around the outer race.

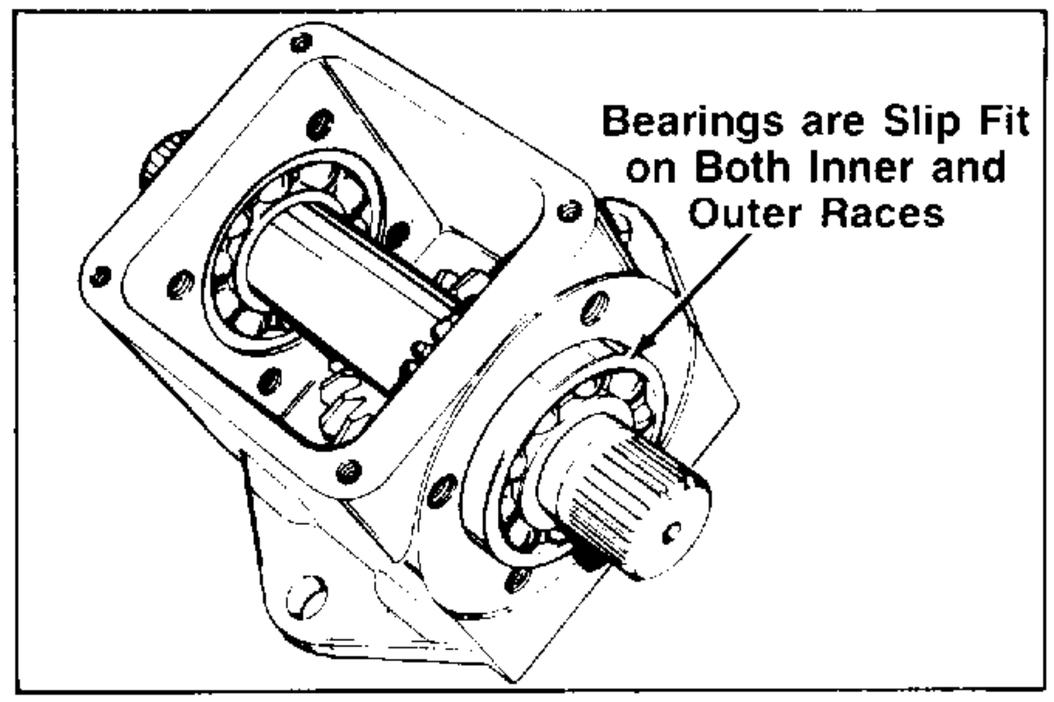

5. Using a soft mallet, separate the input shaft and gear. A slight press fit holds a spline surface on the shaft in a spline of the gear.

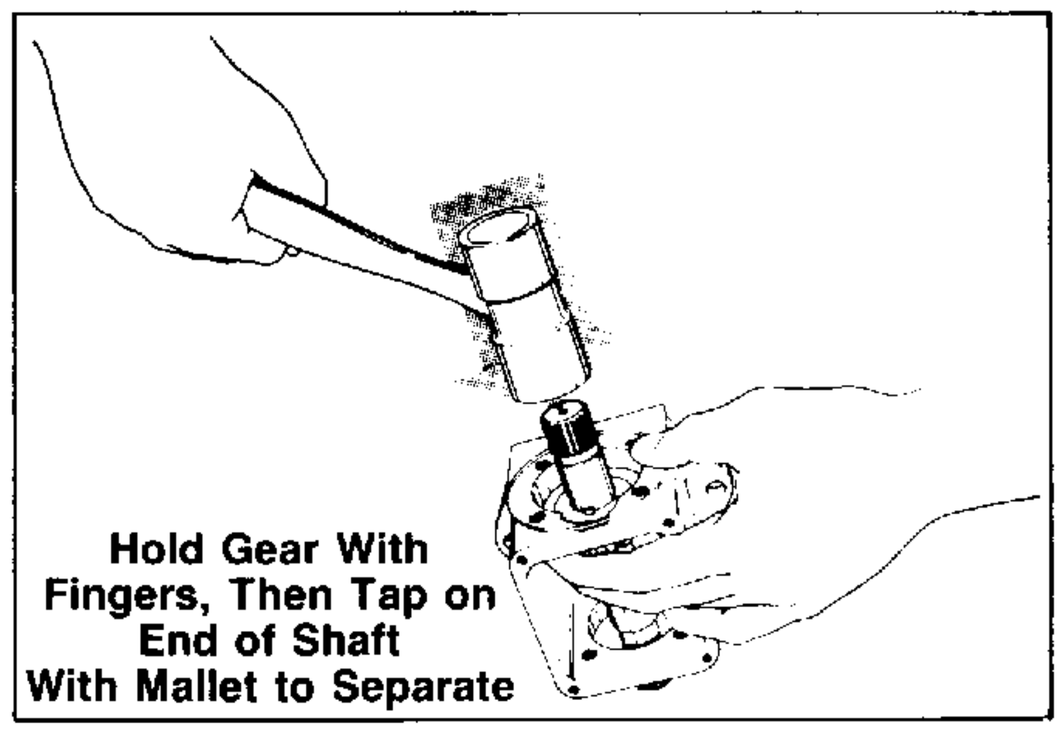

6. Remove and discard the output shaft oil seal. Do not scratch shaft. Remove and discard snap ring. Tap the shaft into the housing, using a soft mallet.
7. If necessary, remove the snap ring to separate the gear and bearing from the shaft. Hold the gear and bearing in one hand and tap the end of the shaft vigorously with a soft mallet.

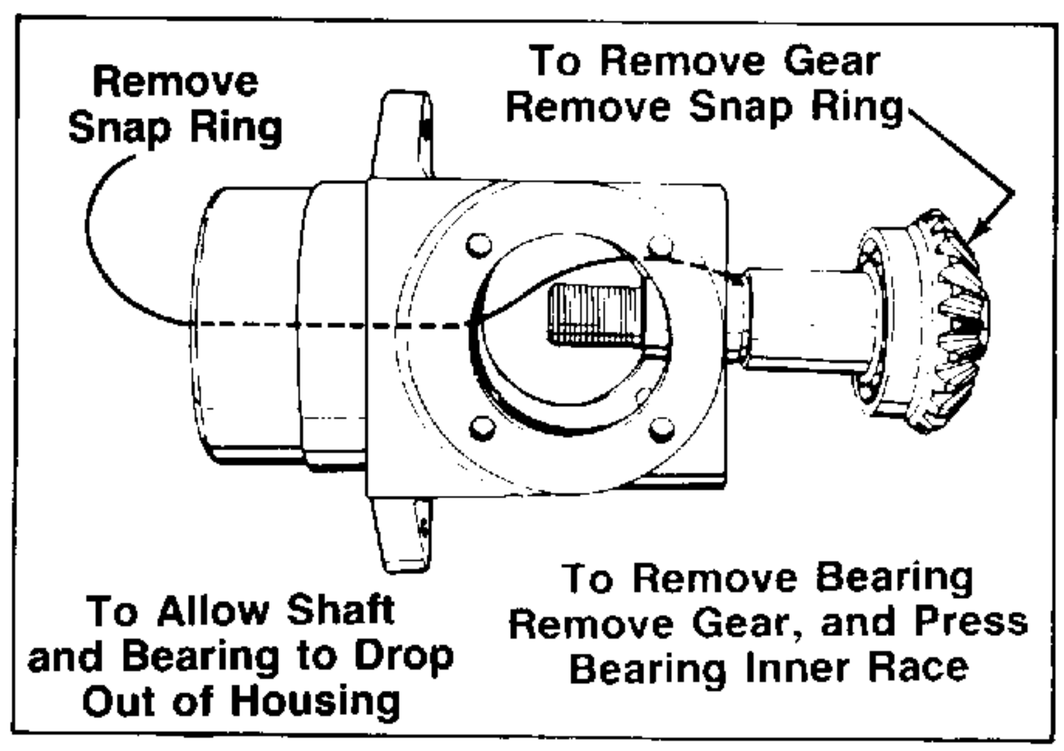

8. Cleaning, Inspection and Repair
   a. Clean all parts of grease, rust, or foreign matters.
   b. Dry all parts. Compressed air may be used on all parts EXCEPT BEARINGS.
   c. Check bearings for smooth rotation. Lubricate.
   d. Remove all burrs and scratches from shafts.
   e. Check housing for cracks or pulled metal.
   f. Replace all snap rings removed.
   g. Replace all oil seals.
9. If separated, install inner ball bearing and bevel gear on output shaft. Be careful of alignment. Use of a press is preferable to tapping parts together with a mallet.
10. Press shaft, bearing and gear assembly into housing until outer bearing race bottoms in retaining cavity.
11. Install outer bearing and new snap ring.
12. Install new oil seal, using seal sleeve No. 670185 and driver 670227 until seal is flush with housing.

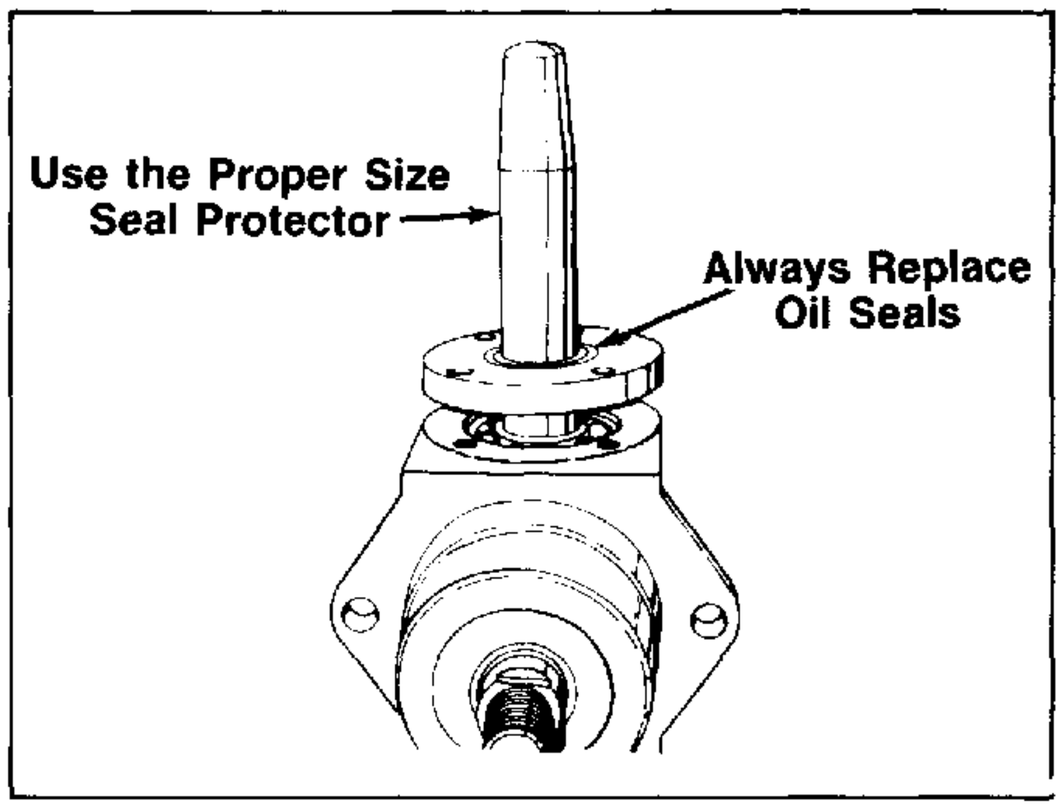

13. Position input bevel gear in mesh with output shaft bevel gear. Tap the input shaft into place with a soft hammer. Use one hand to hold the gear and shaft to dampen tapping blows. Be sure gear is on the marked side of the housing.

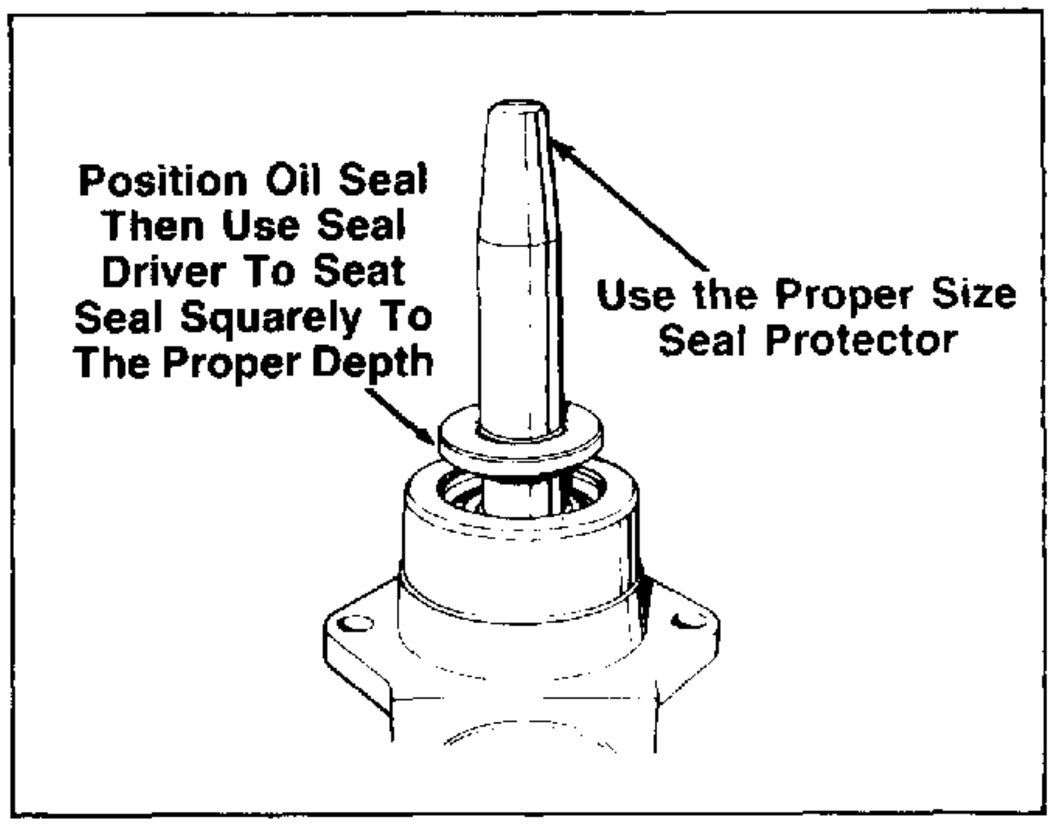

14. Align shaft and insert and ball bearing on each bearing surface by hand.
15. Install new seals in retainer caps, using driver 670227.
16. Using seal sleeve 670185 over the shaft serrated ends, install new gaskets and bearing cap. Tighten retaining cap screws to 8-11 ft. lbs.
17. Fill housing with 4 oz. of E.P. Lithium grease.
18. Install gasket and cover and secure with self tapping screws. Torque to 20-24 in. lbs.
19. Align scribe marks and install "T" Drive on equipment.

SIX-SPEED TRANSAXLE

WITH CREEPER GEAR
MODEL 717-3159

SECTION 1. Differential and Axle Assembly
2. (3) Speed Gear Housing and Shifter Assembly
3. Primary Reduction Housing Assembly
4. Creeper Gear Assembly
5. Clutch and Drive Shaft Assembly

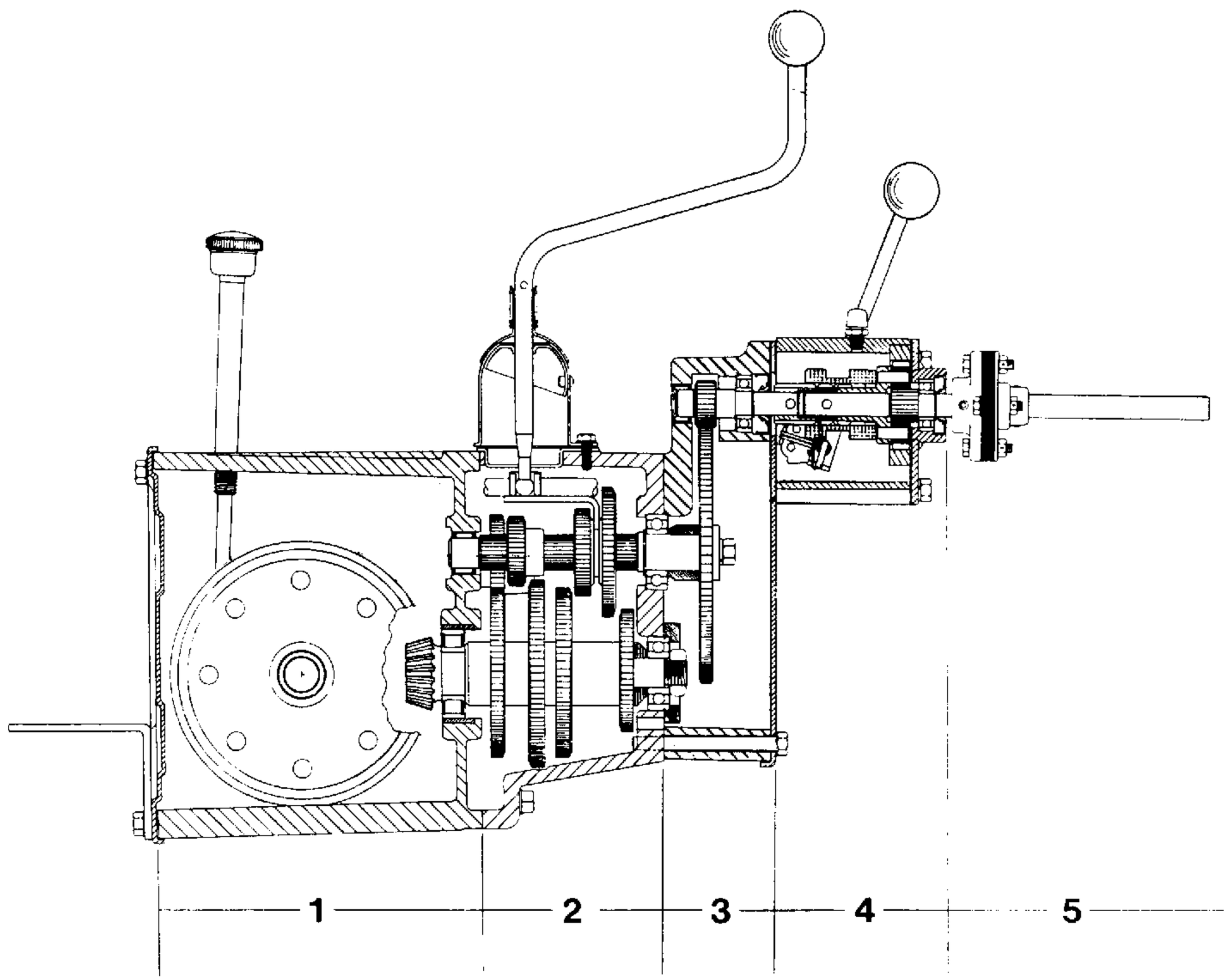

Instructions: Select number for section in which a repair is to be made.

SERVICE MENU

1.00 Differential and axle ass'y.:
- 1.10 Axle ass'y. left and right hand.
- 1.11 Axle carrier, broken.
- 1.12 Needle bearing damaged.
- 1.13 Leakage at face gasket or shaft seal.

1.20 Differential housing ass'y.
- 1.21 Axle shaft, broken or bent.
- 1.22 Differential, damaged housing or gears.
- 1.23 Ring gear, worn, chipped or broken.
- 1.24 Oil leaks.
- 1.25 Stripped bolts.
- 1.26 Tapered axle bearings.

2.00 3 Speed-gear housing and shifter ass'y.
- 2.10 Shifter Ass'y.
- 2.20 3-Speed gear housing ass'y.
- 2.21 Shift forks, deformed or worn.
- 2.22 Spur gears, broken or worn.
- 2.23 Detent balls, stuck, due to housing wear.
- 2.24 Bearing failure.
- 2.25 Oil leaks.

3.00 Primary reduction housing ass'y.
- 3.10 Input pinion, wear or breakage.
- 3.11 Reduction gear, failure.
- 3.12 Oil leaks.

4.00 Creeper gear ass'y.
- 4.10 Bearing failure
- 4.11 Loss of lubricant.
- 4.12 Part breakage.

Instruction: The first number shows the section in which a repair is to be made. The next two (2) digits designate a specific problem within that section. This number will direct you to the portion of the repair manual you want.

REPAIR PROCEDURE

SECTION 1; DIFFERENTIAL AND AXLE ASS'Y.

1.10 Axle Ass'y. left and right hand: Repairs covered in this section do not require removal of the transaxle from the tractor.

1.101 Loosen tire nuts, use hoist or jack to lift rear tires.

1.102 Remove tire and brake on damaged side. (See brake sect.)

1.103 Remove bolts (6) holding carrier casting in place.

1.104 Remove bolts (9) holding rear cover plate and tow-plate.

1.105 Caution! Clean all areas surrounding openings to prevent dirt from entering transmisison.

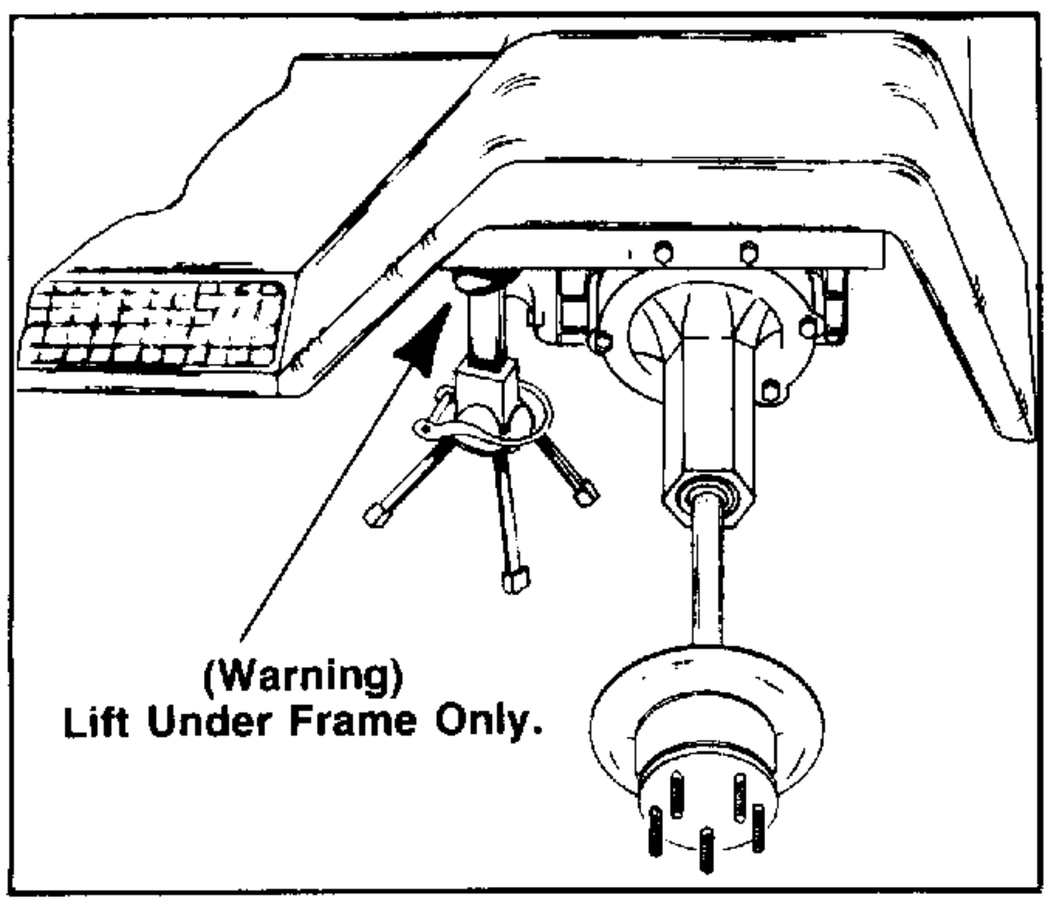

FIGURE 1.

1.106 Tap rear cover-plate to break seal and remove.

1.107 Using a wide screwdriver or special tool push off E-ring from axle end inside differential. Do not fail to remove ring immediately.

1.110 After completing steps 1.101 to 1.105, tap defective axle carrier to break seal and pull off including axle shaft.

1.111 Pull out axle-shaft, inspect for wear in bearing area, eccentricity, visually inspect spline and E-ring groove.

1.112 Press new needle bearing and oil seal into replacement rear axle carrier.

1.113 Scrape off old gasket material from sealing surfaces without leaving nicks or scores.

1.114 Using new gaskets and locktite for all bolts, reassemble in revrese order to the above. Torque bolts 360 inch/lbs.

1.12 Same procedure as 1.11 but replace needle bearing only.

1.13 Retorque bolts to 360 inch/lbs. If not effective, replace carrier gasket, use procedure described in 1.101 to 1.114. To replace the shaft seal proceed with par. 1.101 to 1.107 and 1.111. Remove seal using impact puller as shown below.

Press new seal into carrier bore using a hammer and special arbor. Take care not to damage the lip when reinserting the axle shaft.

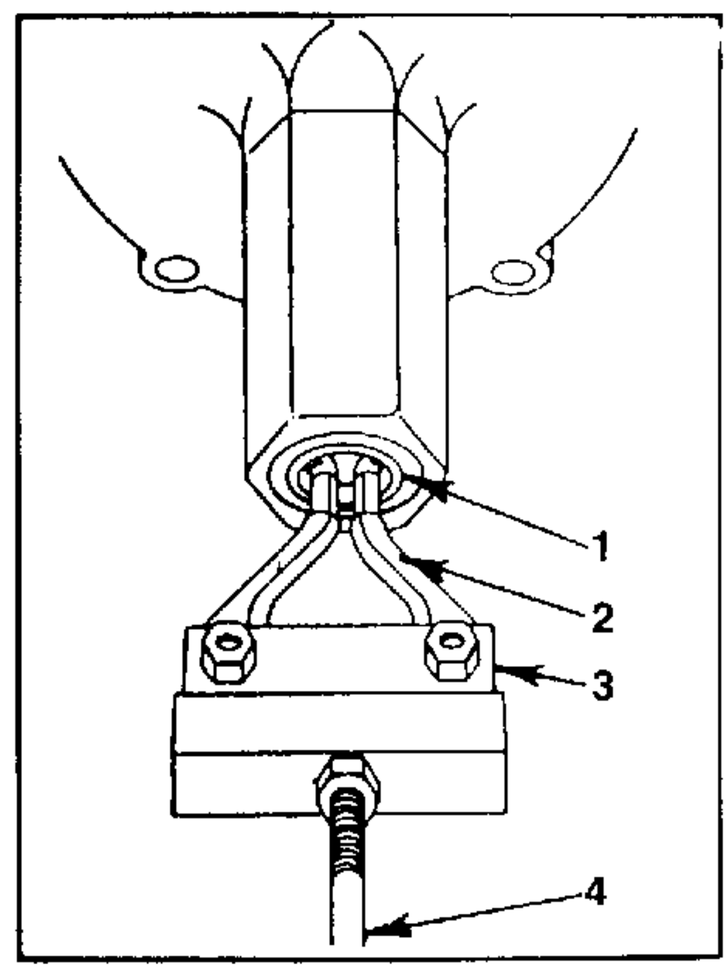

FIGURE 2.

1. Bearing
2. OTC 960-8 Legs
3. OTC 954 Bridge
4. Slide Hammer

1.20 Differential housing ass'y.: Repairs covered in this section also do not require removal of the transaxle from the tractor. Use tear down procedure 1.101 to 1.113. Both left and right axles and axle carriers must be removed.

1.21 Oil leakage; retorque all nine (9) bolts to 360 inch/lbs. If not effective, replace gasket using procedure as in section 1.104; 1.105; 1.106; 1.113 and 1.114.

1.220 Differential damaged: To remove differential
1.221 ass'y. proceed through step 1.111.

1.222 Take out (3) bolts each and remove left and right bearing retainers. Caution! Keep shim-pacs with retainers and mark left and right for identical reinstallation.

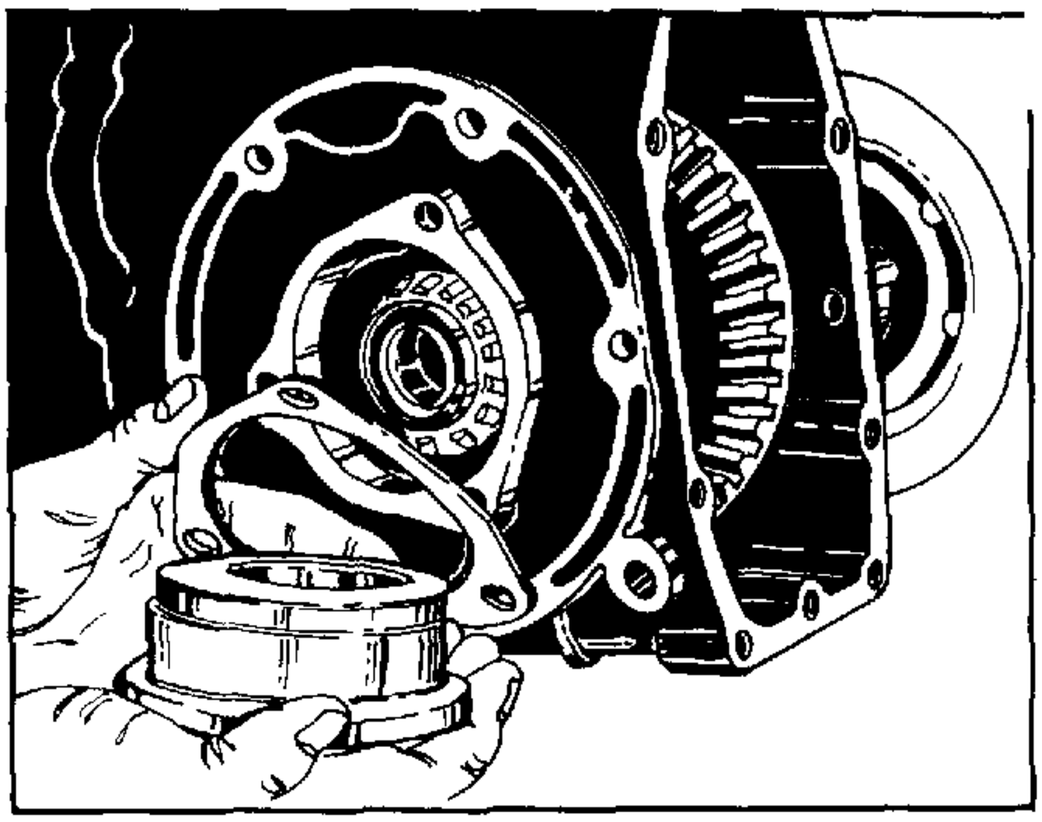

FIGURE 3.

1.223 Lift differential from axle housing.

1.224 Remove (4) bolts holding differential together; remove retaining ring at one end of cross shaft and pull out of housing.

1.225 Inspect for broken, worn or galled parts and replace.

1.226 Reassemble in reverse order of disassembly instruction.

1.227 After bearing retainer bolts have been tightened to 360 inch/lbs. the following checks must be performed:

a. Tapered bearing preload, 2 to 12 lbs. on pull scale. (Figure 4)

b. Ring gear to pinion backlash .003" to .008". (Figure 5)

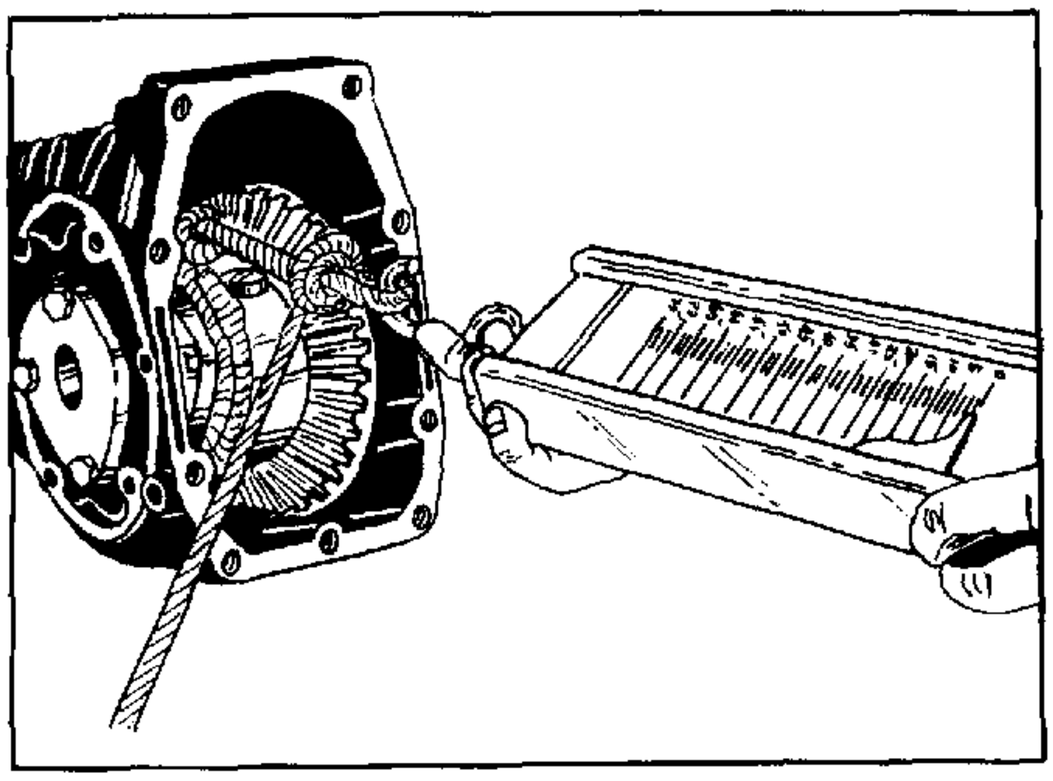

FIGURE 4.

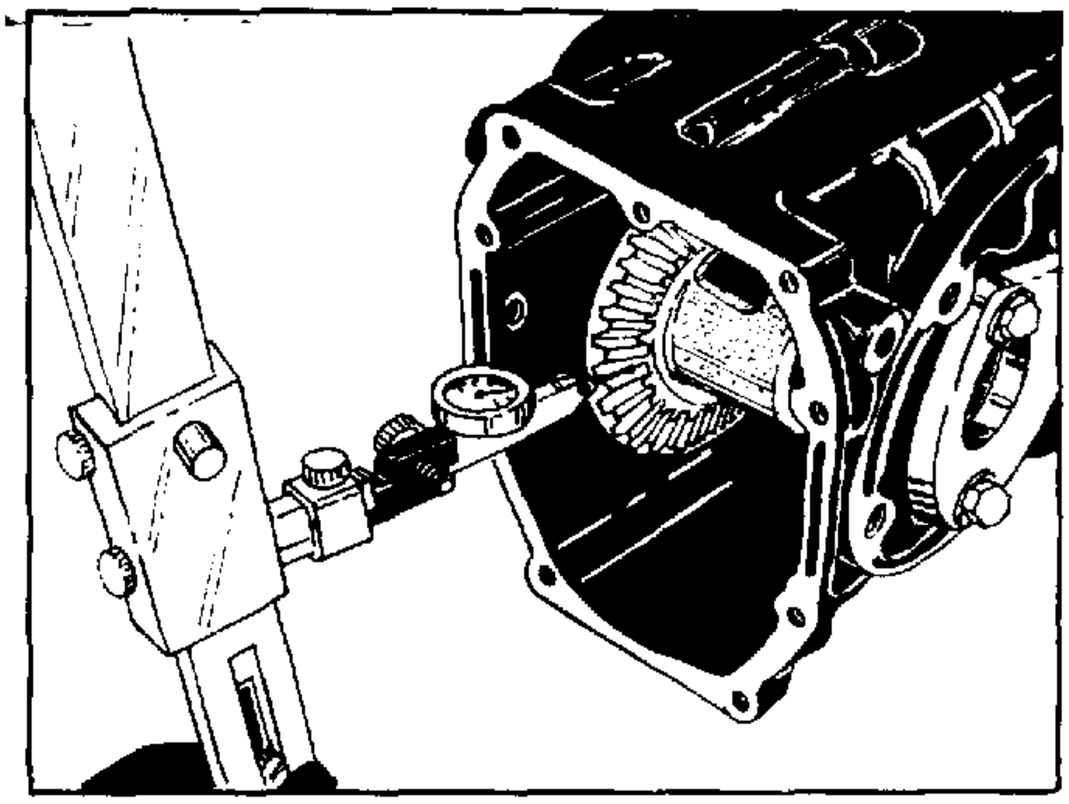

FIGURE 5.

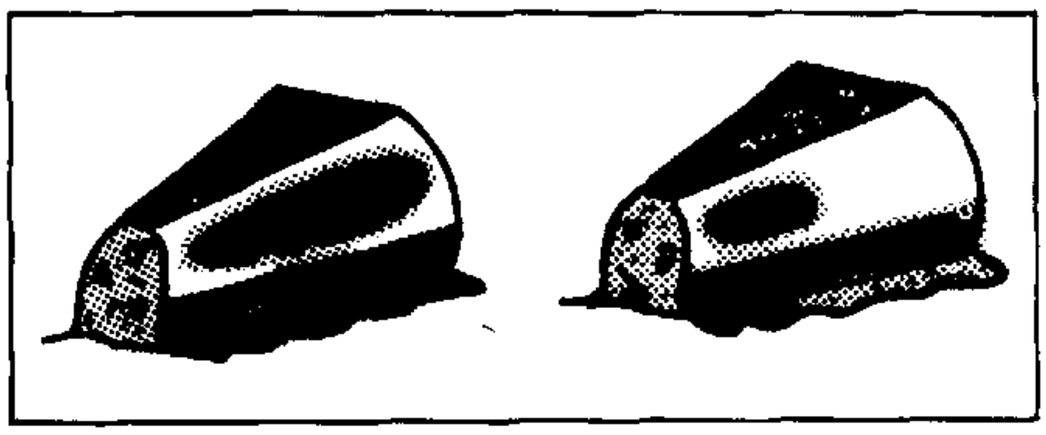

FIGURE 6A and 6B.

NOTE: Hand roll testing should produce a pattern as shown in figure B.
In use when load and deflection increase, the pattern will elongate as in Figure B.

1.227 c. Tooth contact check; brushing gear with red oxide or rubbing on a thin coat of prussian blue. (Figure 6)

1.23 Ring gear damaged:

1.231 If ring gear has been damaged in tooth area it is very likely that the mating drive pinion also has been damaged and must replaced. See section 2.20 for removal instructions.

1.232 If upon careful examination the pinion shaft proves not to be defective, the ring gear can be replaced with a ring gear-housing subassembly.

1.233 Each time a new gear or pinion is used a new shim-pack must be devised for the left and right side placed below the bearing retainers, starting with single or multiple shims totalling .014". When assembled, test a, b and c must be performed and the results fall within the limits set forth. By trial and error the shim thickness is increased to reduce preload, decreased to increase preload and shifted from left to right to increase backlash, and right to left to decrease it. This procedure must be repeated until all criteria are being met.

If the contact pattern is either too high or low, see figure the lateral pinon location also needs to be corrected. For instruction see par. 2.2.

1.24 Oil leaks: Retorque bolts to 360 inch/lbs. If not effective, replace rear cover plate gasket using method as in 1.113-1.114.

1.25 The drawbar bracket is designed to pull only light loads such as utility and garden carts not exceeding a steady pull of 75 lbs. When this limit is exceeded by pulsating loads for extended time periods the bolts can first loosen up and subsequently work out of the casting. To save the expense of replacing the axle housing, coil threaded inserts can be installed.

1.26 Tapered rear axle bearings: Remove differential, steps shown in par. 1.20.

1.261 Using appropriate pullers, extract the race from the bearing retainer and the cone from the differential housing. See figure

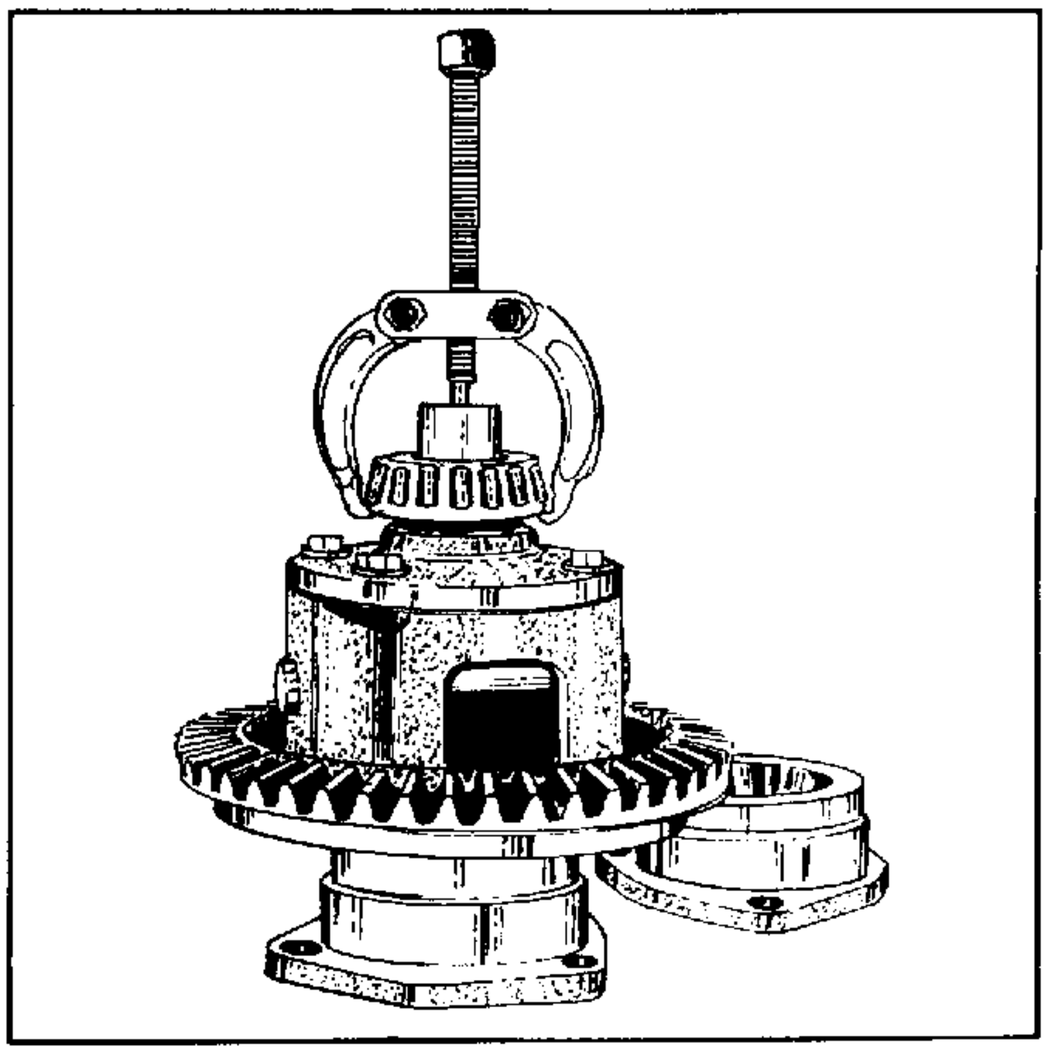

FIGURE 7.

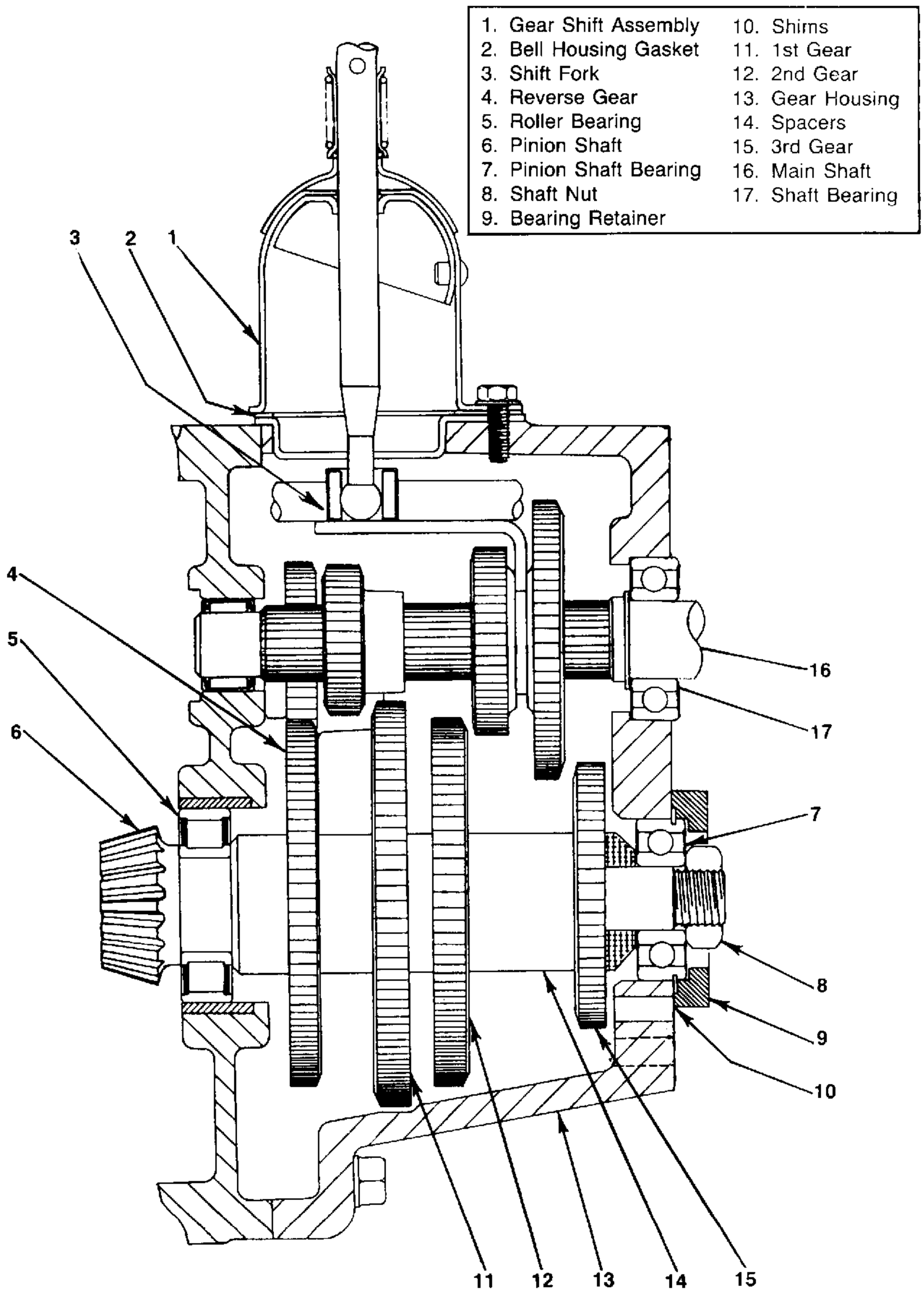

3-SPEED-GEAR HOUSING AND SHIFT ASSEMBLY
SECTION 2

SECTION 2, 3-SPEED-GEAR HOUSING AND SHIFTER ASSEMBLY

2.10 Shifter assembly.

2.11 Locate shift lever in neutral position.

2.12 Remove (3) bolts holding shifter assembly to transmission housing and pull out through fender opening.

2.13 After accomplishing the necessary repair, place lever in "N" position and direct into the rectangular pocket formed by both shift forks. Refasten bolts.

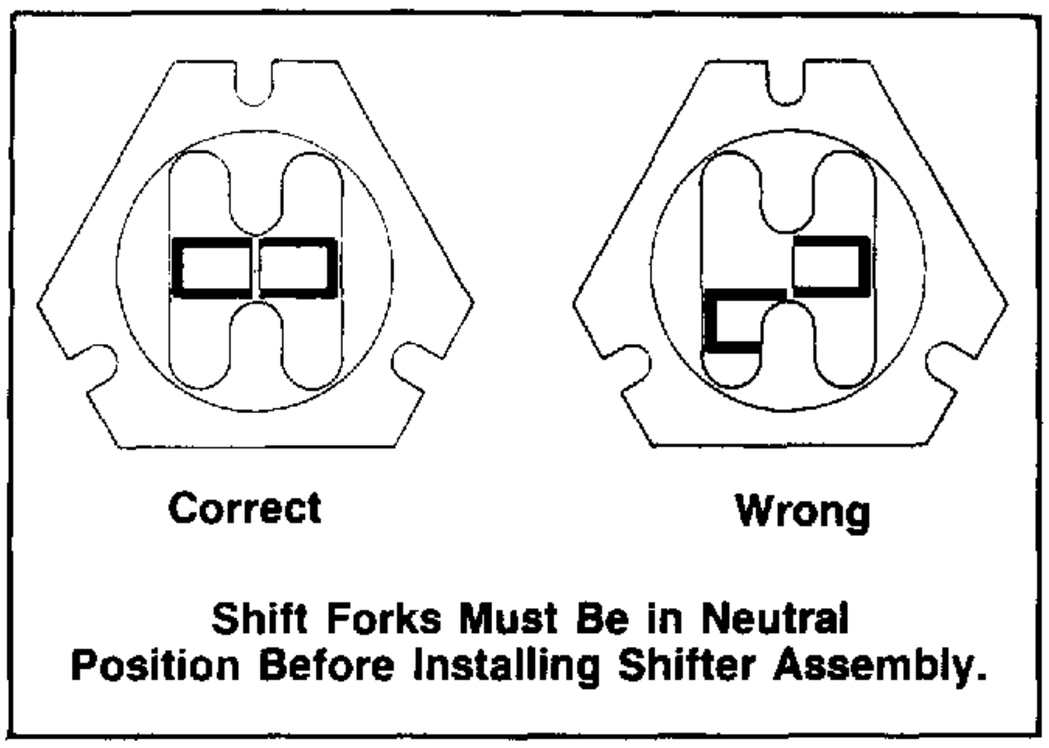

FIGURE 8.

2.20 3-Speed-gear housing assembly.
Servicing the 3-speed-gear housing requires splitting of the tractor, removal of the creeper and reduction drive, and gear shift assembly.

2.201 Clean area around creeper gear to prevent dirt from entering the assembly after removal of the four (4) mounting bolts allowing the assembly to be pulled off the splined drive hub to be inspected and stored until reassembly.

2.202 Unbolt reduction housing cover plate seven (7) bolts. Tap cover to loosen, peel off gasket and discard. Remove screw in the center of the reduction gear, lift up and tip up on opposite side of pinion until the gear can be lifted out. See figure 10.

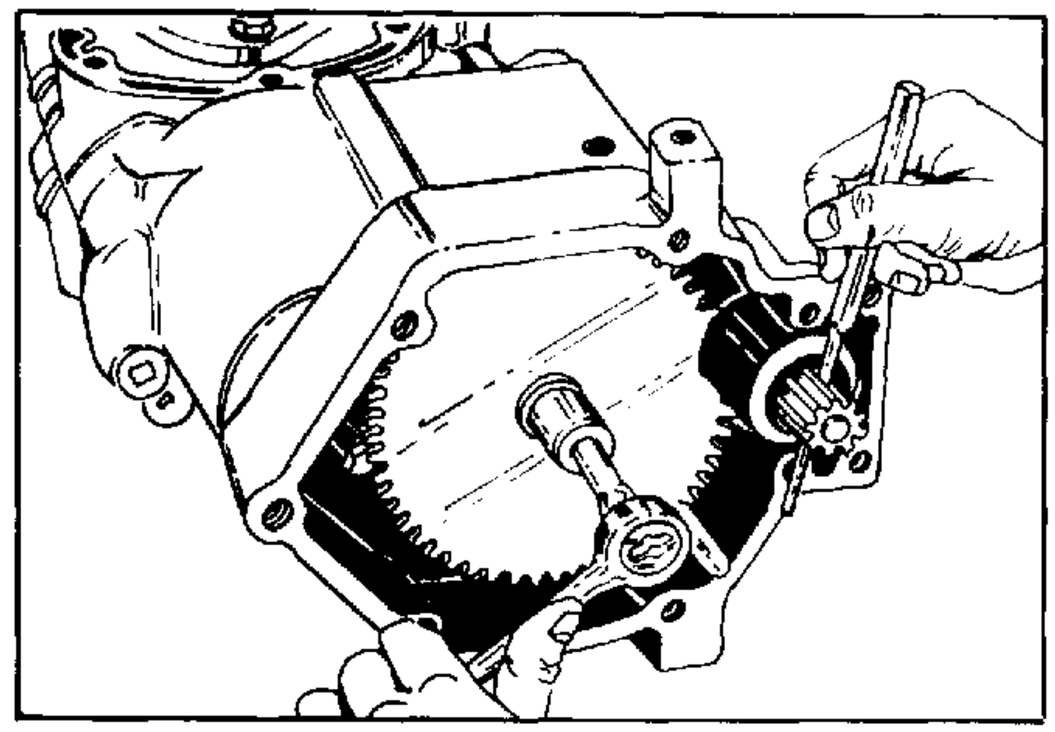

FIGURE 9.

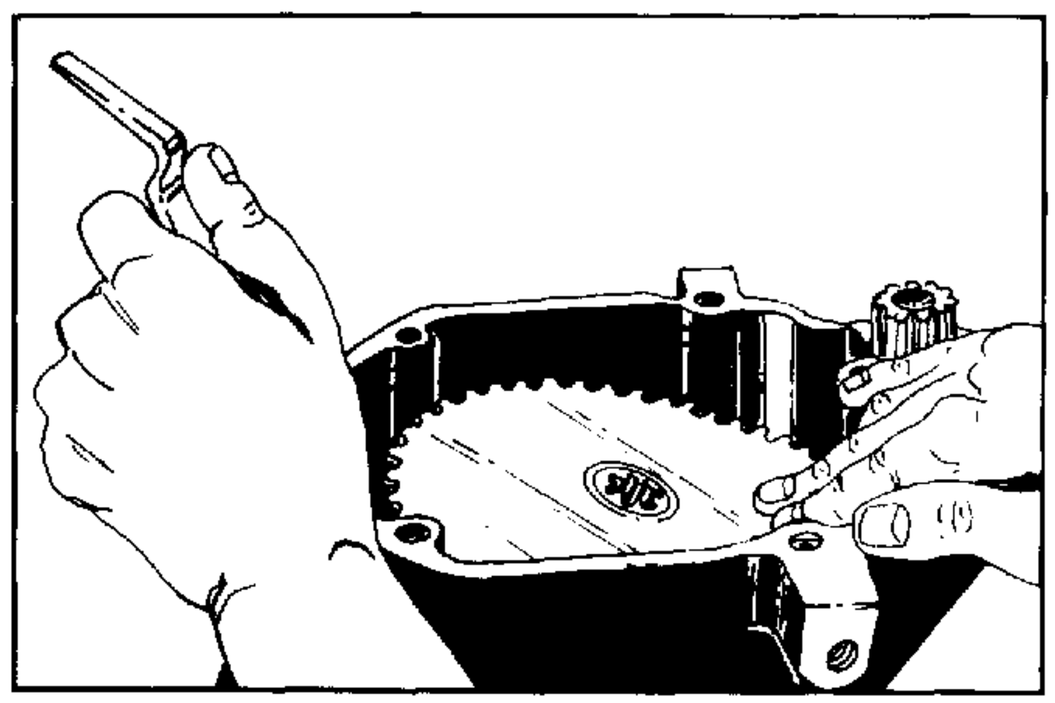

FIGURE 10.

2.203 Remove reduction housing by taking out two (2) short 7/16 bolts and two (2) long. Tap housing to break the face-seal.

2.204 Unbolt bearing retainer and lift off, remove retaining ring and shim pack. Clean shims, tape and save for reassembly, to assure an unchanged pinion-ring gear contact. If tooth contact is either high or low, see test 1.227c; a correction can be made by changing the shims. See figure 4.

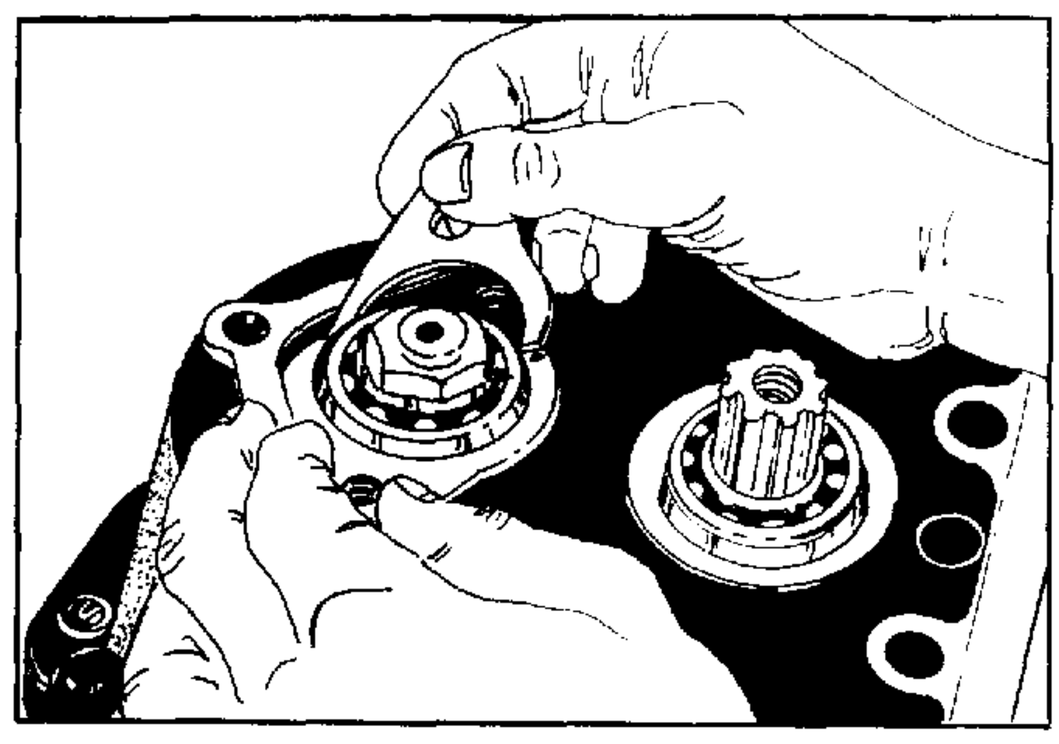

FIGURE 11.

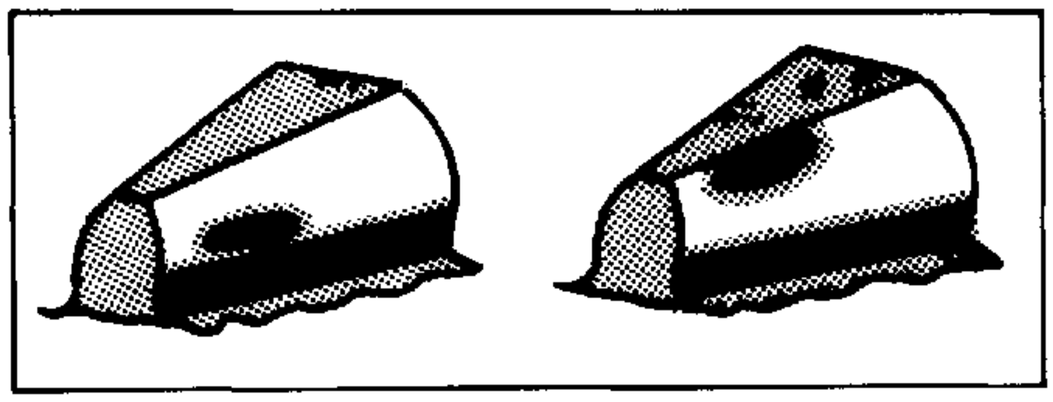

FIGURE 12. c & d

NOTE: Tooth bearing position from the root to the crown of the tooth is controlled by lateral position of the pinion-shaft. If low tooth bearing is indicated as in figure c, the pinion-shaft must be adjusted toward the ring gear (less shims). If high, as figure d, the pinion-shaft must be adjusted away from the ring-gear (more shims).

2.205 To continue with the disassembly, back out two (2) set screws on side of housing to relese detent spring tension. Tap down both detent shafts, reached through the end of the housing. Tap on side of housing to brake seal and pull up to gain separation as to insert two pry-bars. Being careful not to damage either sealing face pry off housing lightly, tapping sides and shaft ends, until housing can be removed.

2.21 Shift forks can now be inspected for squareness to the shaft (1/64" max) and the shaft must not run out more than 1/32" when chucked up on one end.

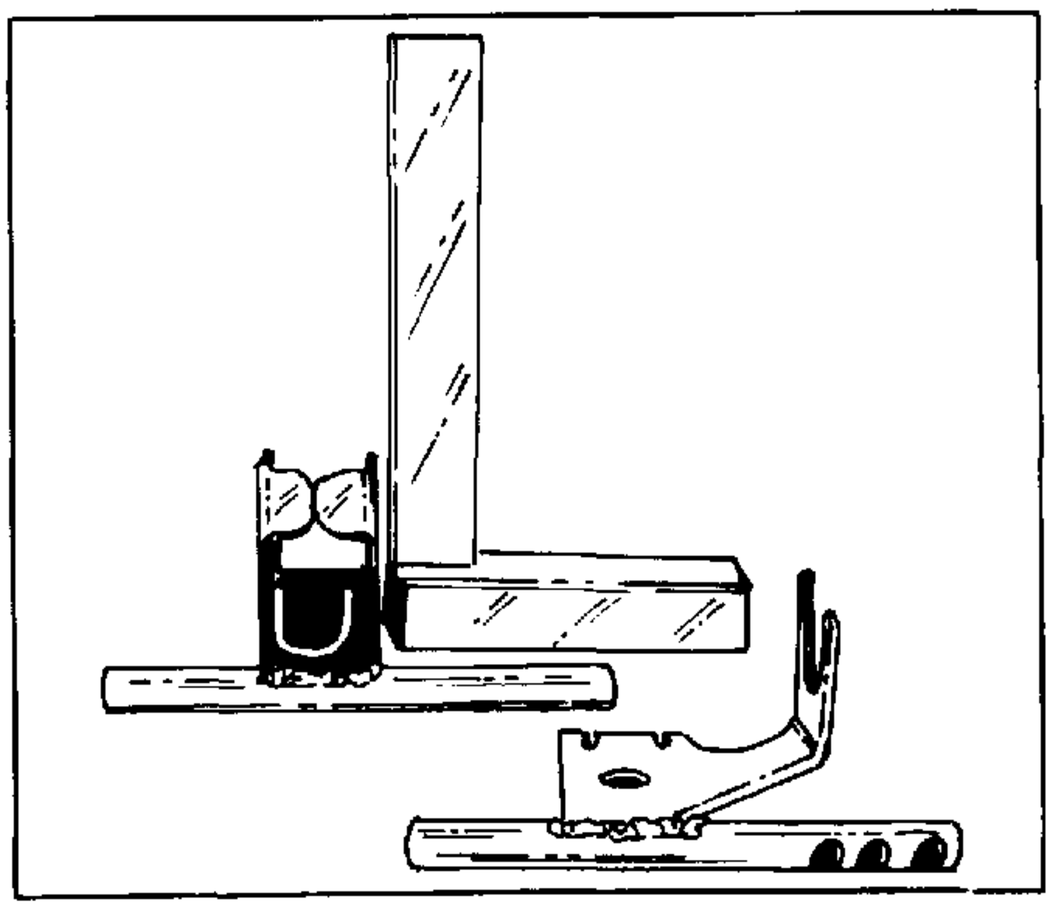

FIGURE 13.

2.22 Broken spur gears can be exchanged at this point just by sliding off drive shaft, or by removing the nut of the pinion-shaft. Special care must be taken to remove all metal shavings and other foreign matter and to inspect for damage to mating parts. Watch in reassembly that lead-ins on gear faces are in the direction as shown on drawing and that spacers are in the same location as shown. See par. 2.25 for resealing.

2.23 If shift-forks and shafts check out to meet 2.21 shift problem could originate from defective or worn detent-shaft bores, broken spring or missing parts. Check parts and inspect bore endings inside of housing. Compare with figure 14.

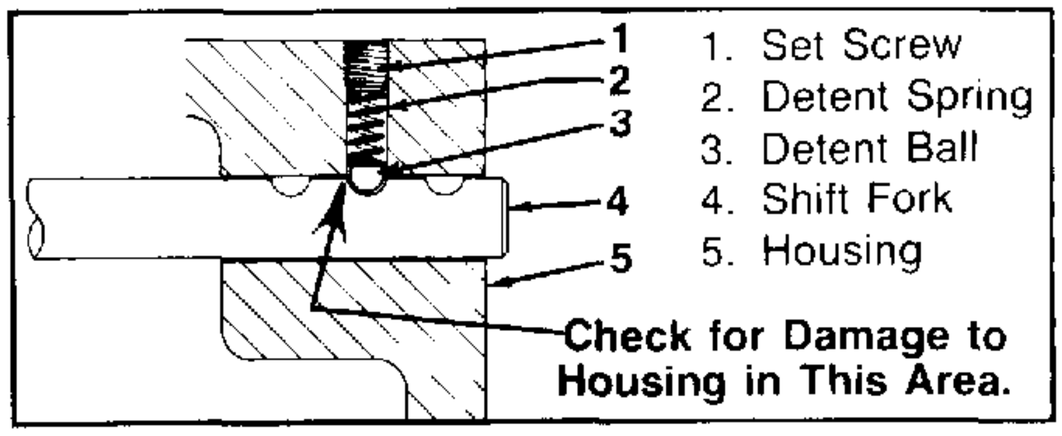

2.24 Bearing failure: If bearings feel like balls are catching or rolling over something, are hard to turn or are loose, a replacement is a must! Simply tap or press out the old one and install using an arbor.

2.25 Oil leaks: Locktite 515 liquid gasket is used to seal the gear housing to the differential housing. When bolted together only a thin film remains that hardens in 72 hours. At the manufacturer the gasket is silk screened onto the housing face to assure even coverage, the resulting gasket provides dimensional stability for the precision working components inside and conforms to the surface in contact. Bolts loosening, part warpage, part porosity, foreign matter, nicks and scratches all are factors that could result in a leak.

Once you have identified the leak to be at this face and not next to it, due to casting porosity, the housing must be disassembled; see 2.20 and reseal as follows.

2.251 Remove all gasket material from both sealing surfaces either by gently using a scraping tool or Locktite's "spray on gasket remover." Feel for nicks and scratches and remove by scraping or stoning.

2.252 Spray both surfaces with a Locktite 515 gasket primer and brush on a thin and uniform coat of liquid gasket onto both surfaces; lift housing in position over gear assembly, line up with shafts and tap down using a plastic hammer. Caution! Make sure surfaces approach each other as parallel as possible. Stop tapping as soon as the gap is down to 1/8". Now insert housing bolts and pull housing together evenly.

2.253 Repeat basic procedure for assembly of reduction housing.

1. Input Needle Bearing
2. Reduction Housing
3. Input Bearing
4. Oil Seal
5. Front Gasket
6. Input Shaft
7. Reduction Gear Bolt
8. Reduction Gear
9. Front Cover Plate
10. Gear Spacer

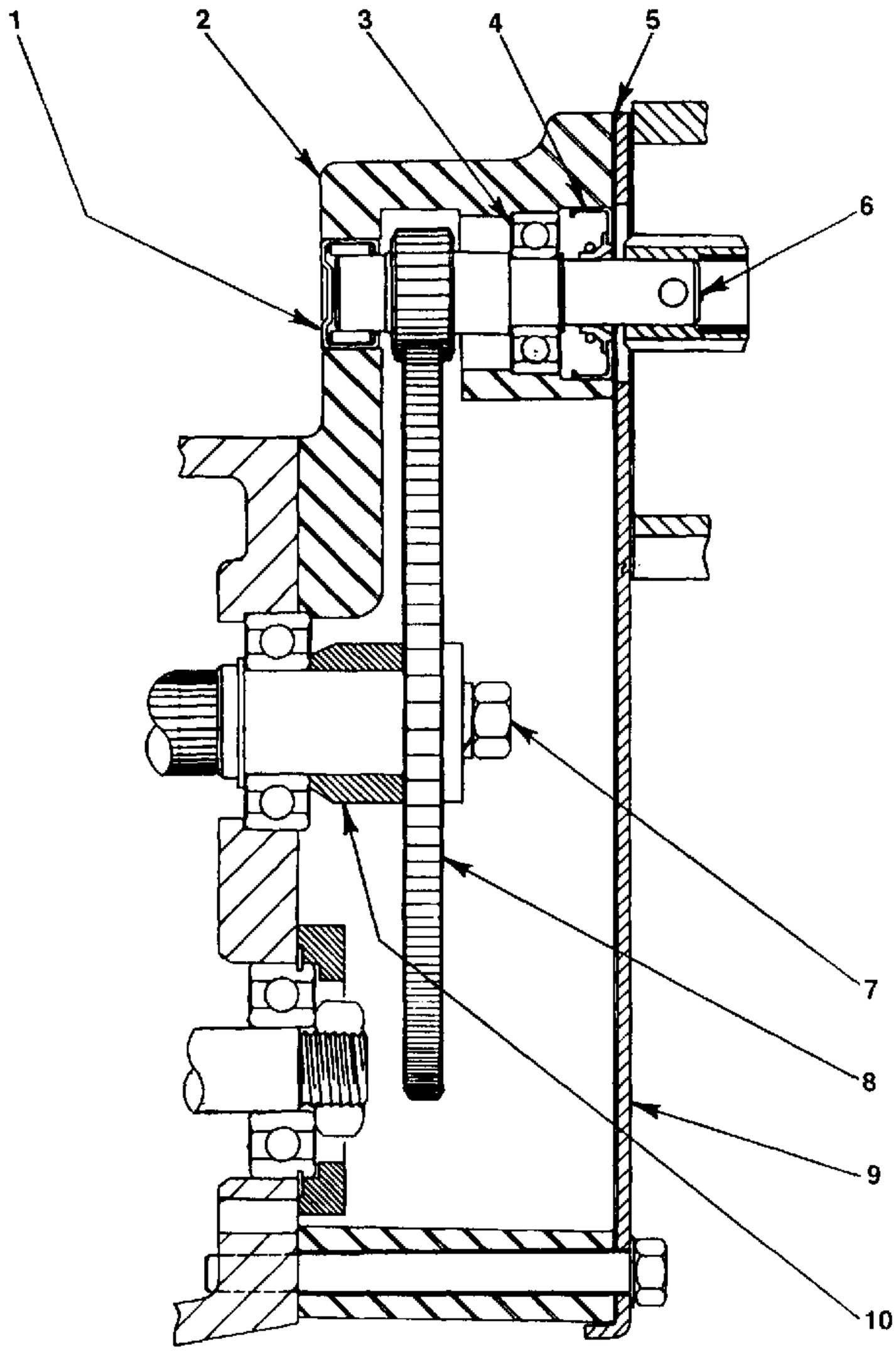

PRIMARY REDUCTION HOUSING ASSEMBLY
SECTION 3

SECTION 3, PRIMARY REDUCTION HOUSING

3.00 Primary reduction housing. To service this portion of the transaxle, the ceeper gear (section 4.00) must be removed first.

3.01 Unbolt cover plate seven (7) bolts (1" long); remove plate, discard gasket and inspect damage.

3.10 Remove input pinion assembly by inserting impact puller under pinned spline coupler. Impact until pinion shaft, ball bearing and seal is extracted. If a proper puller is not available the whole pinion-shaft assembly can be tapped out using a smaller then 1" dia. punch. See figures 15 and 16. If this method is used, the rear needle bearing should be replaced. Clean entire reduction housing, inspect mating reduction gear for damage and retighten retainer screw to 360 inch/lbs.

3.11 If the reduction gear is found to be damaged it can be removed without taking out the pinion gear assembly. After taking out the retainer screw, lift gear as far as possible and then tip up on side opposite the pinion. See figures 9 and 10, sect. 2.202. The gear can now be removed and a replacement can be installed.

Always use a new gasket to prevent leaks.

3.12 Oil leak: If an oil leak occurs on a gasket it usually can be stopped by retightening all bolts uniformly to the 360 inch/lbs. torque specified. Higher or uneven torque will destort the plate, requiring straightening or replacement. Should retightening not stop the leak, a new gasket must be installed. Note: The use of liquid gasket is not recommended on this surface.

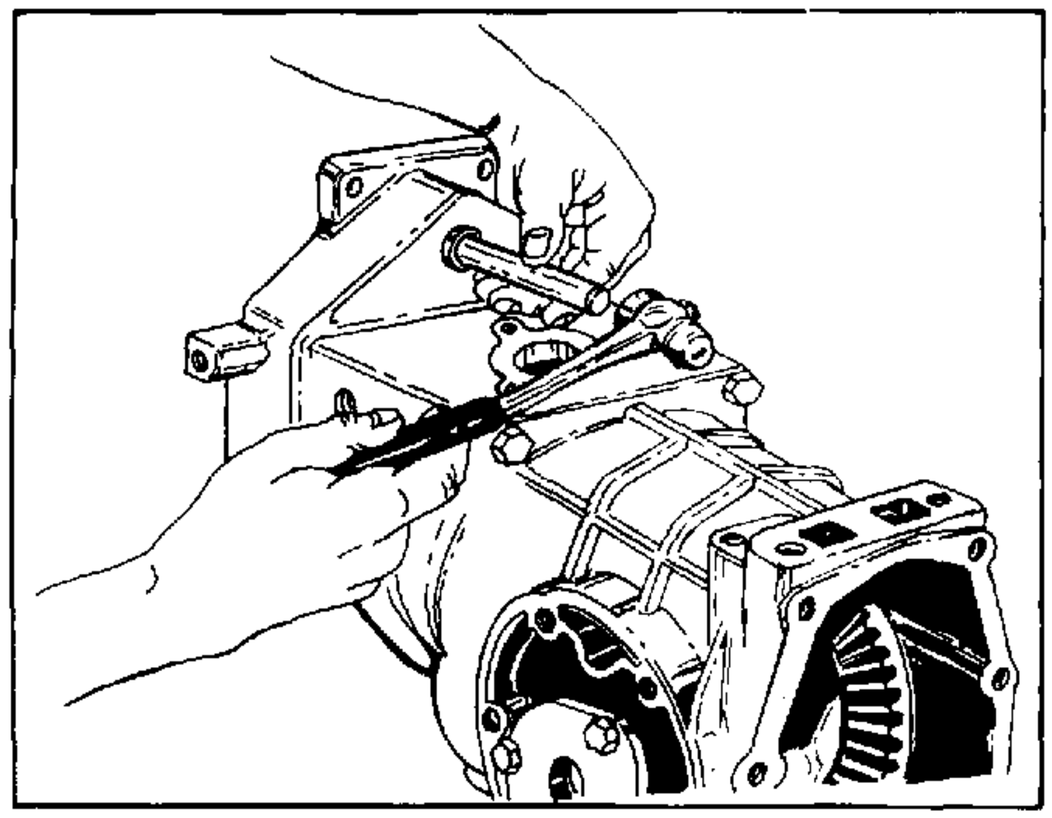

FIGURE 15.

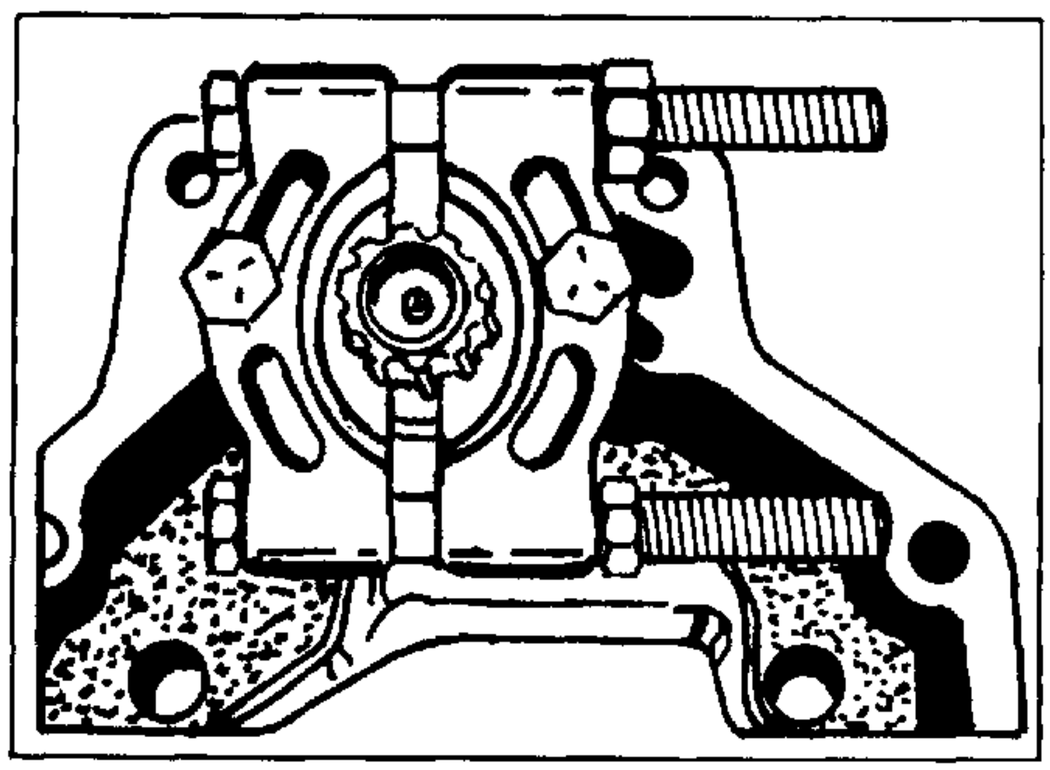

FIGURE 16.

CREEPER GEAR ASSEMBLY
Section 4

1. Planetary Race
2. Gaskets
3. Cover Plate Assembly
4. Input Shaft Bearing
5. Oil Seal
6. Direct Drive Coupling
7. Input Shaft
8. Spiral Pin
9. Shift Mechanism
10. Shifter Collar
11. Planet Carrier Assembly
12. Drive Shaft Coupling

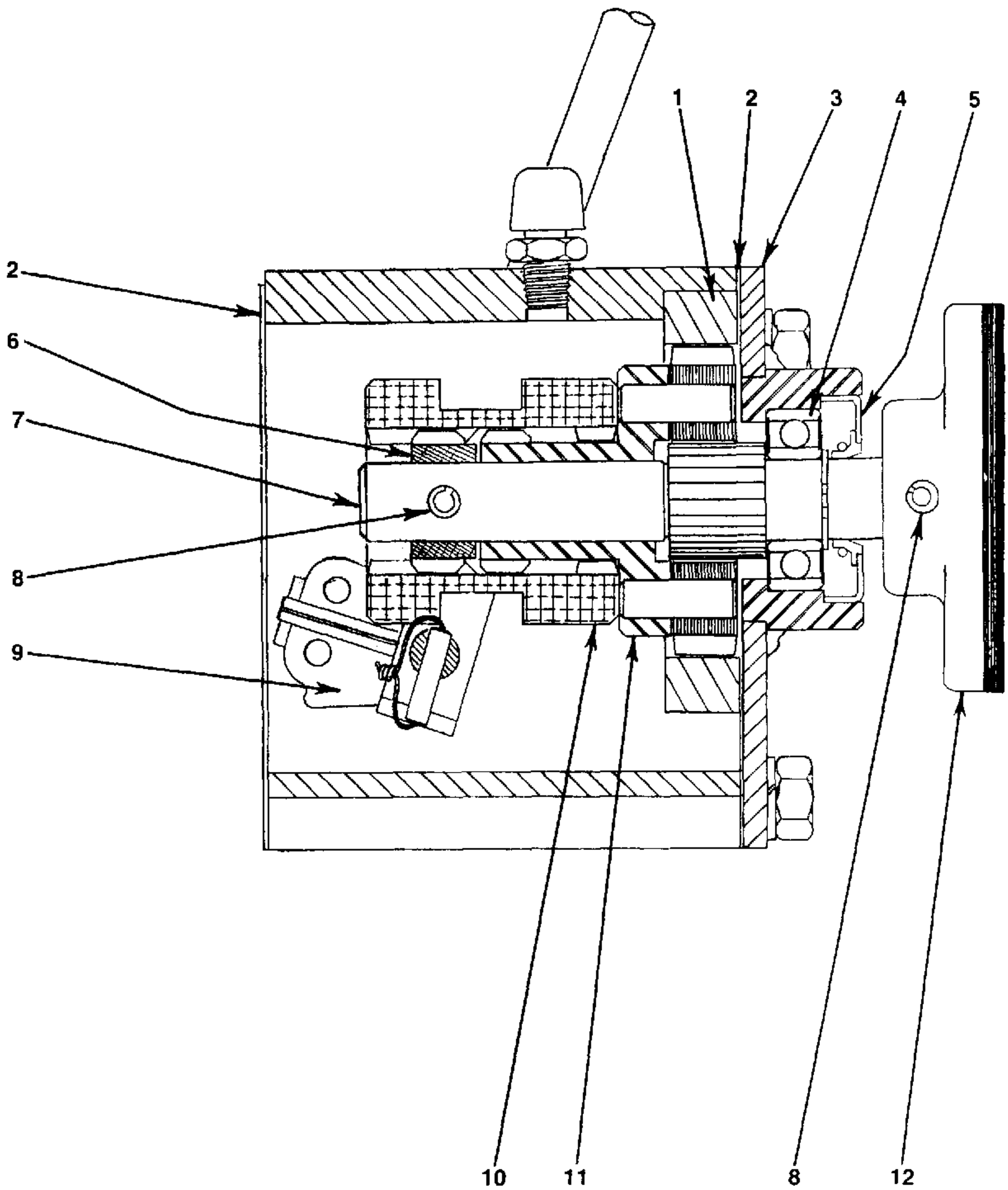

SECTION 4, CREEPER GEAR ASSEMBLY

4.01 Take out four (4) bolts joining the creeper gear and the reduction housing, pull off and wash out grease. Peel off gasket and scrape sealing surfaces clean. Inspect for damage.

4.10 Bearing failure: Knock out roll pin in drive shaft coupler. Pull on cover plate, constantly rotating the shaft to allow alignment of the internal parts until separation. Tap out roll pin in splined hub. Remember orientation for proper reassembly after repair. Slide off the splined hub and planet gear carrier. Place in press and push out pinion-shaft ball bearing and seal. For reassembly push bearing into housing first, then the oil seal; insert pinion shaft by hand, place planet carrier and spline-hub and tap in roll-pin to be exactly centered. Fill 3/4 full with Shell Darina "O" grease (use Darina AX if not available). Place new gaskets, bolts and fasten to 360 inch/lbs.

4.11 Caution: Loss of lubricant is usually associated with part failure. If this can be confirmed, proceed as in par. 4.10; if unit is in good working order, refill with Shell Darina-O leaving an air pocket of approximately 1/4 of the total volume for expansion.

4.12 Proceed as in par. 4.10.

GENERAL PRINCIPLES

Prerequisite For Good Repair Work

A. Study cross sectional views to refamiliarize yourself with the product.

B. Move the article to be repaired into a well lit and clean work area.

C. Keep clean rags or paper towels on hand.

D. Find section in repair manual covering your particular problem and study in depth.

E. Acquire or make specialized tools and keep orderly in reach.

F. After disassembly, wash all parts, arrange in order and inspect under a good light to determine the extent of all damage including possible damage that occurred as a result of the primary part failure.

G. Replace all damaged and questionable parts and always replace gaskets, fasteners with locking devices and retaining rings.

H. Lubricate parts used in reassembly.

HYDROSTATIC TRANSAXLE
Model 717-3158

Section 5. Differential and Axle Assembly
6. Adapter Housing Assembly
7. Hydro
8. Clutch and Drive Shaft Assembly

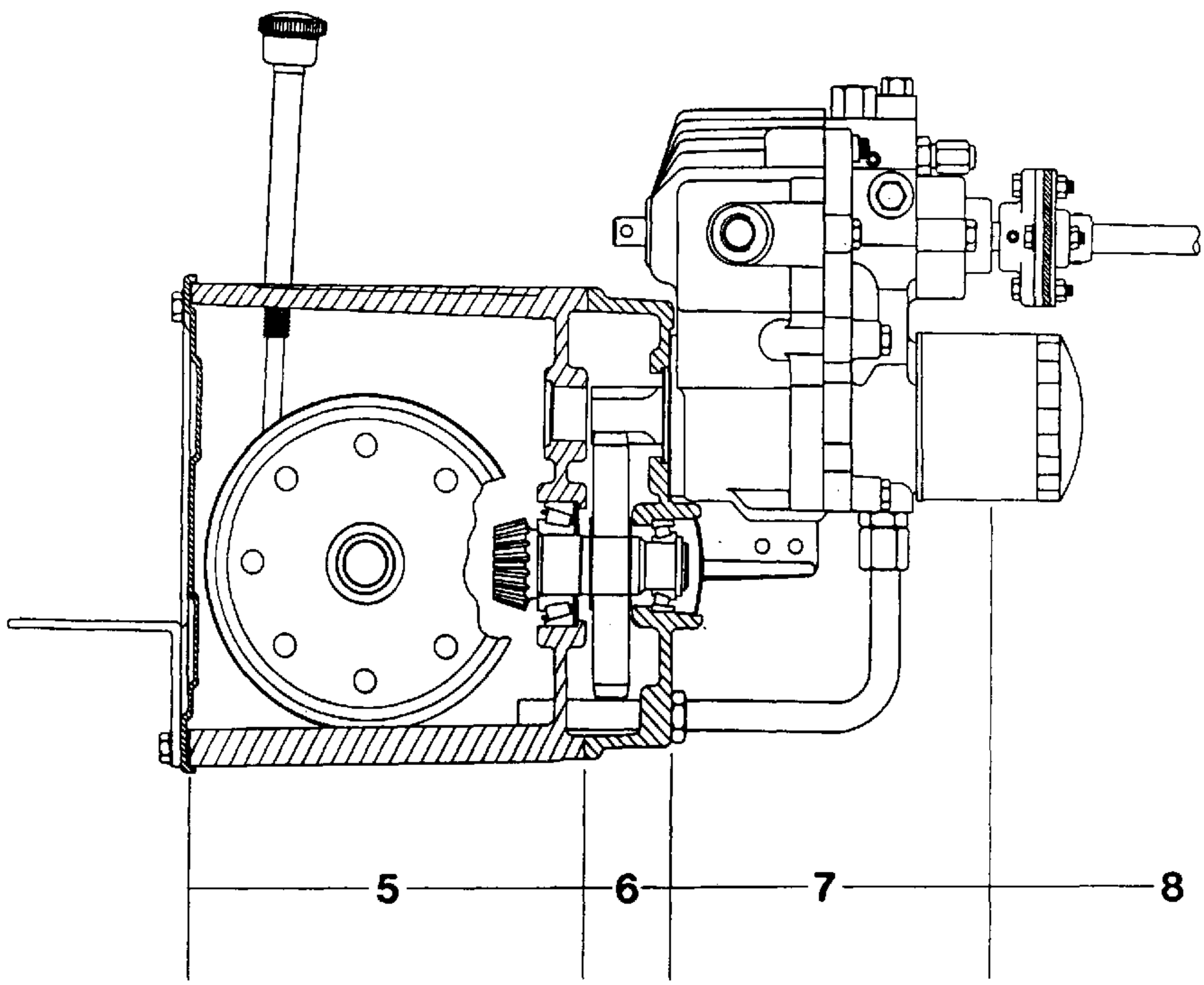

Instructions: Select number for section in which a repair is to be made.

GENERAL PRINCIPLES

Prerequisite For Good Repair Work

A. Study cross sectional views to refamiliarize yourself with the product.

B. Move the article to be repaired into a well lit and clean work area.

C. Keep clean rags or paper towels on hand.

D. Find section in repair manual covering your particular problem and study in depth.

E. Acquire or make specialized tools and keep orderly in reach.

F. After disassembly, wash all parts, arrange in order and inspect under a good light to determine the extent of all damage including possible damage that occurred as a result of the primary part failure.

G. Replace all damaged and questionable parts and always replace gaskets, fasteners with locking devices and retaining rings.

H. Lubricate parts used in reassembly.

SERVICE MENU (HYDRO)

5.00 Differential and axle ass'y.:
- 5.10 Axle ass'y. left and right hand.
- 5.11 Axle carrier, broken.
- 5.12 Needle bearing damaged.
- 5.13 Leakage at face gasket or shaft seal.

5.20 Differential housing ass'y.
- 5.21 Axle shaft, broken or bent.
- 5.22 Differential, damaged housing or gears.
- 5.23 Ring gear, worn, chipped or broken.
- 5.24 Oil leaks.
- 5.25 Stripped bolts.
- 5.26 Tapered axle bearings.

6.00 Adaptor housing assembly.
- 6.10 Oil leaks.
- 6.11 Removal of hydro transmission.
- 6.12 Removal of adaptor housing.
- 6.13 Adaptor housing assembly.
- 6.14 Reduction gear failure.
- 6.15 Pinion shaft worn, chipped or broken.
- 6.16 Bearing preload.
- 6.17 Damaged, or worn roller bearings.
- 6.18 Oil fill general.

Instruction: The first number shows the section in which a repair is to be made. The next two (2) digits designate a specific problem within that section. This number will direct you to the portion of the repair manual you want.

REPAIR PROCEDURE

SECTION 5, DIFFERENTIAL AND AXLE ASS'Y.

5.00 Axle Ass'y. left and right hand: Repairs covered in this section do not require removal of the transaxle from the tractor.

5.101 Loosen tire nuts, use hoist or jack to lift rear tires.

5.102 Remove tire and brake on damaged side. (See brake sect.)

5.103 Remove bolts (6) holding carrier casting in place.

5.104 Remove bolts (9) holding rear cover plate and tow-plate.

5.105 Caution! Clean all areas surrounding openings to prevent dirt from entering transmission.

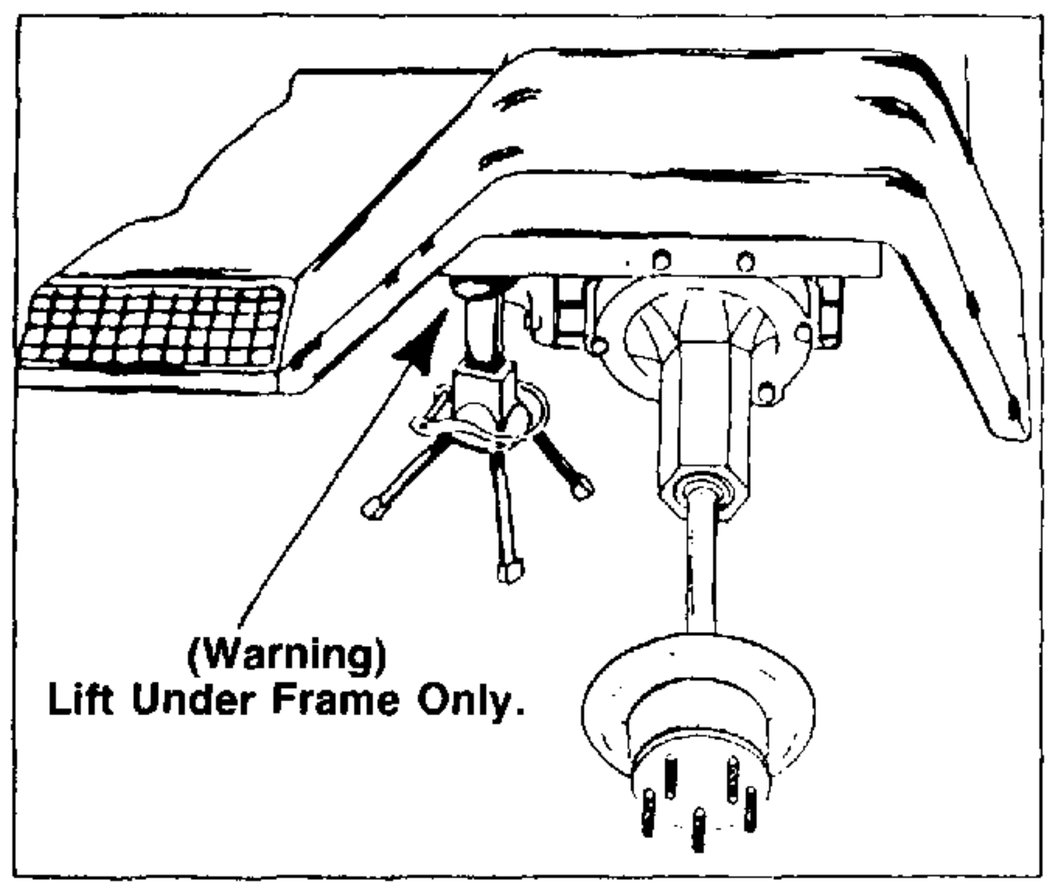

FIGURE 1.

5.106 Tap rear cover-plate to break seal and remove.

5.107 Using a wide screwdriver or special tool, push off E-ring from axle end inside differential. Do not fail to remove ring immediately.

5.110 After completing steps 5.101 to 5.105, tap defective axle carrier to break seal and pull off including axle shaft.

5.111 Pull out axle-shaft, inspect for wear in bearing area, eccentricity, visually inspect spline and E-ring groove.

5.112 Press new needle bearing and oil seal into replacement rear axle carrier.

5.113 Scrape off old gasket material from sealing surfaces without leaving nicks or scores.

5.114 Using new gaskets and locktite for all bolts, reassemble in reverse order to the above. Torque bolts 360 inch/lbs.

5.12 Same procedure as 5.11 but replace needle bearing only.

DIFFERENTIAL CROSS SECTION
Section 5

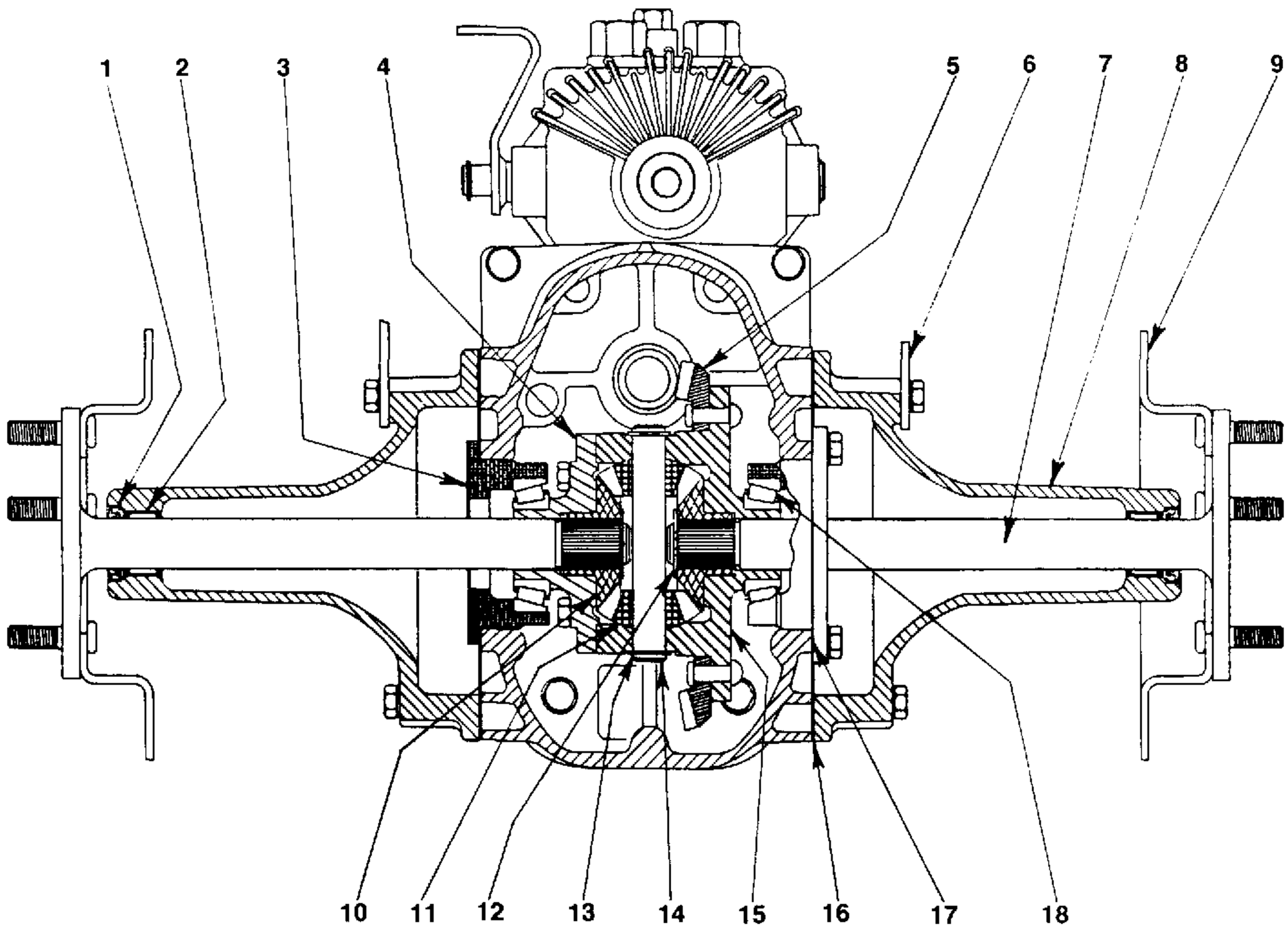

1. Lip Seal	7. Axle Assembly	13. Retaining Ring
2. Needle Bearing	8. Axle Carrier	14. Cross Shaft
3. Bearing Retainer	9. Brake Disc	15. Differential Housing
4. Flange Plate	10. Side Gear	16. Carrier Gaskets
5. Ring Gear	11. Pinion	17. Shims
6. Frame	12. E-Ring	18. Roller Bearing

5.13 Retorque bolts to 360 inch/lbs. If not effective, replace carrier gasket, use procedure described in 5.101 to 5.114. To replace the shaft seal, proceed with par. 5.101 to 5.107 and 5.111. Remove seal using impact puller as shown below.

Press new seal into carrier bore using a hammer and special arbor. Take care not to damage the lip when reinserting the axle shaft.

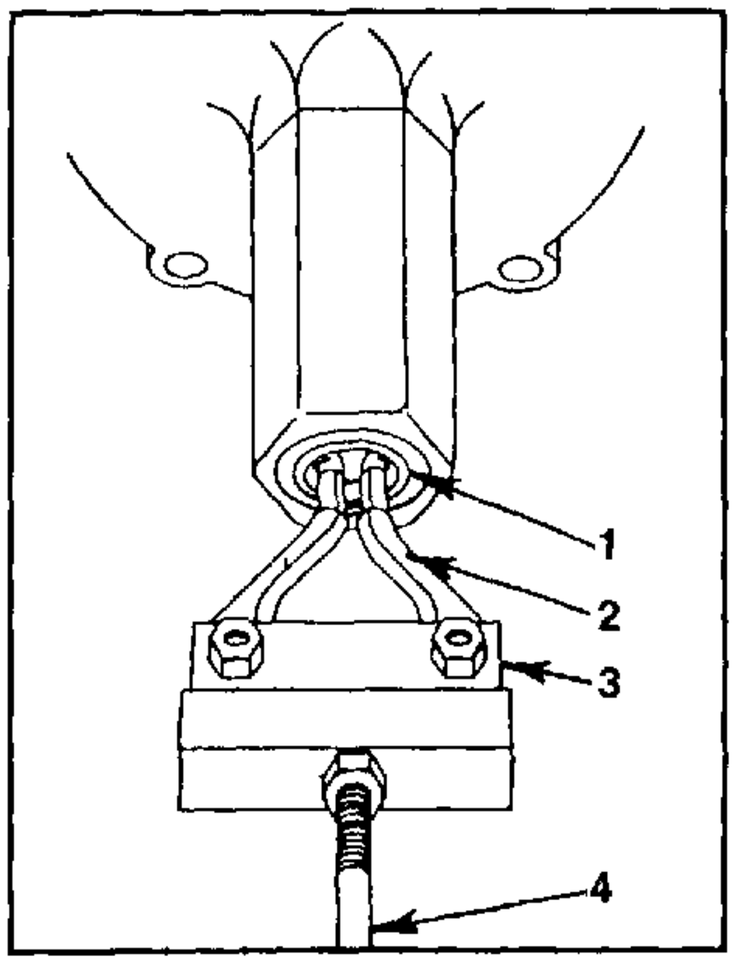

FIGURE 2.

1. Bearing
2. OTC 960-8 Legs
3. OTC 954 Bridge
4. Slide Hammer

5.20 Differential housing ass'y.: Repairs covered in this section also do not require removal of the transaxle from the tractor. Use tear down procedure 5.101 to 5.113. Both left and right axles and axle carriers must be removed.

5.21 Oil leakage; retorque all nine (9) bolts to 360 inch/lbs. If not effective, replace gasket using procedure as in section 5.104; 5.105; 5.106; 5.113 and 5.114.

5.220 Differential damaged: To remove differential

5.221 ass'y. proceed through step 5.111.

5.222 Take out (3) bolts each and remove left and right bearing retainers. Caution! Keep shim-pacs with retainers and mark left and right for identical reinstallation.

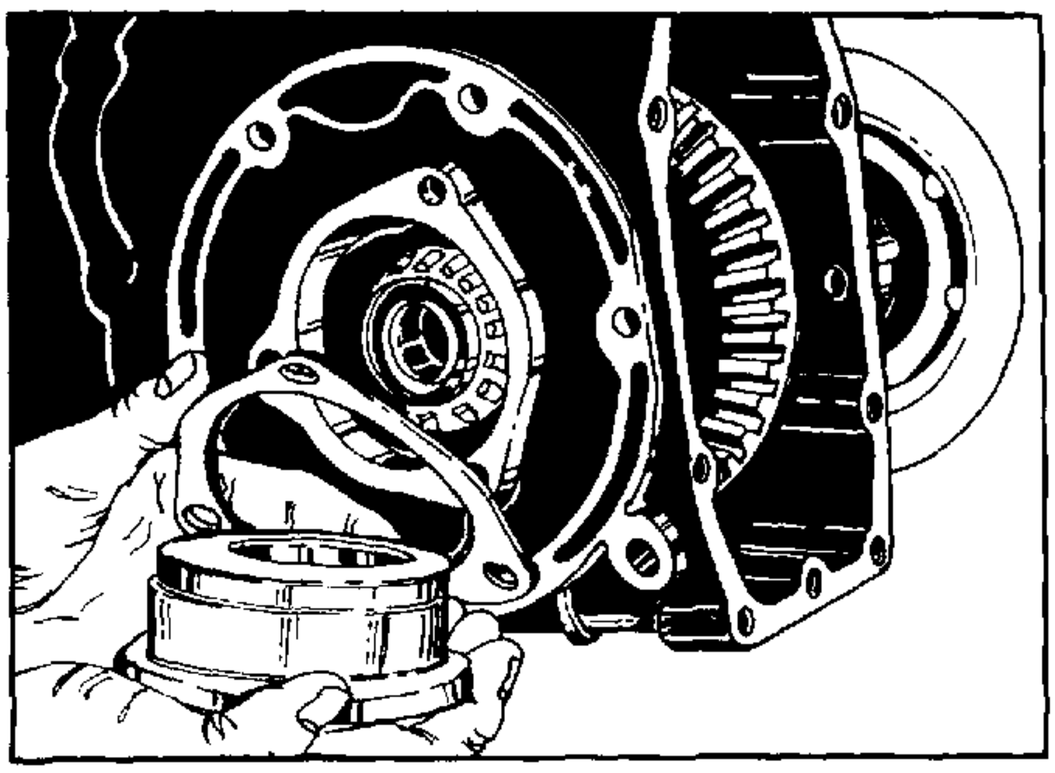

FIGURE 3.

5.223 Lift differential from axle housing.

5.224 Remove (4) bolts holding differential together; remove retaining ring at one end of cross shaft and pull out of housing.

5.225 Inspect for broken, worn or galled parts and replace.

5.226 Reassemble in reverse order of disassembly instruction.

5.227 After bearing retainer bolts have been tightened to 360 inch/lbs. the following checks must be performed:

a. Tapered bearing preload, 4 to 14 lbs. on pull scale. (Figure 4)

b. Ring gear to pinion backlash .003″ to .008″. (Figure 5)

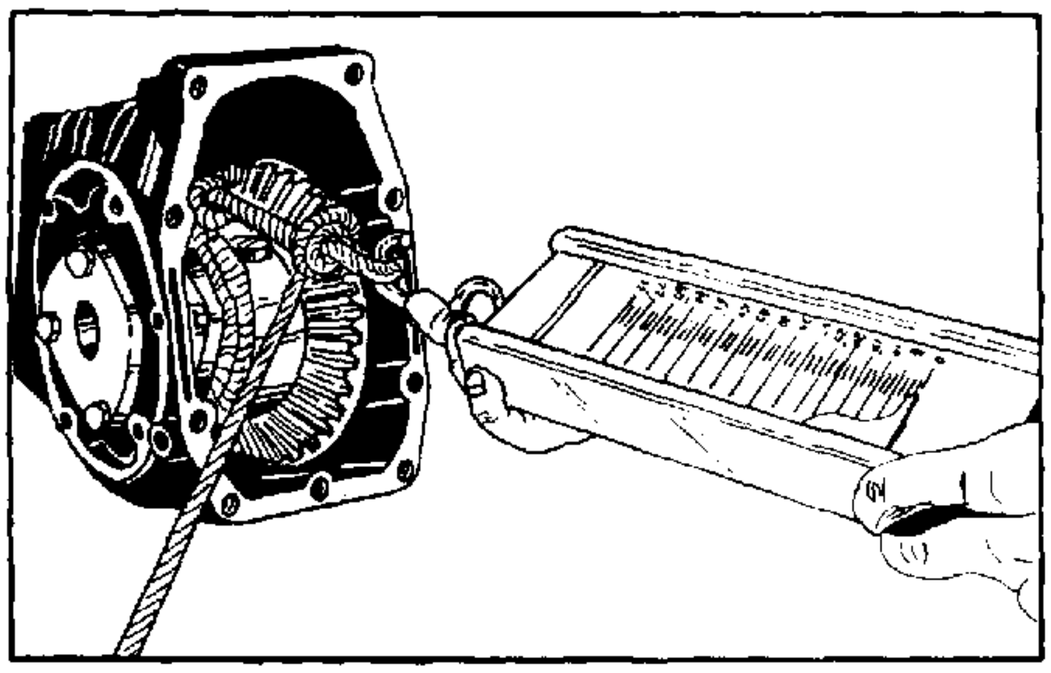

FIGURE 4.

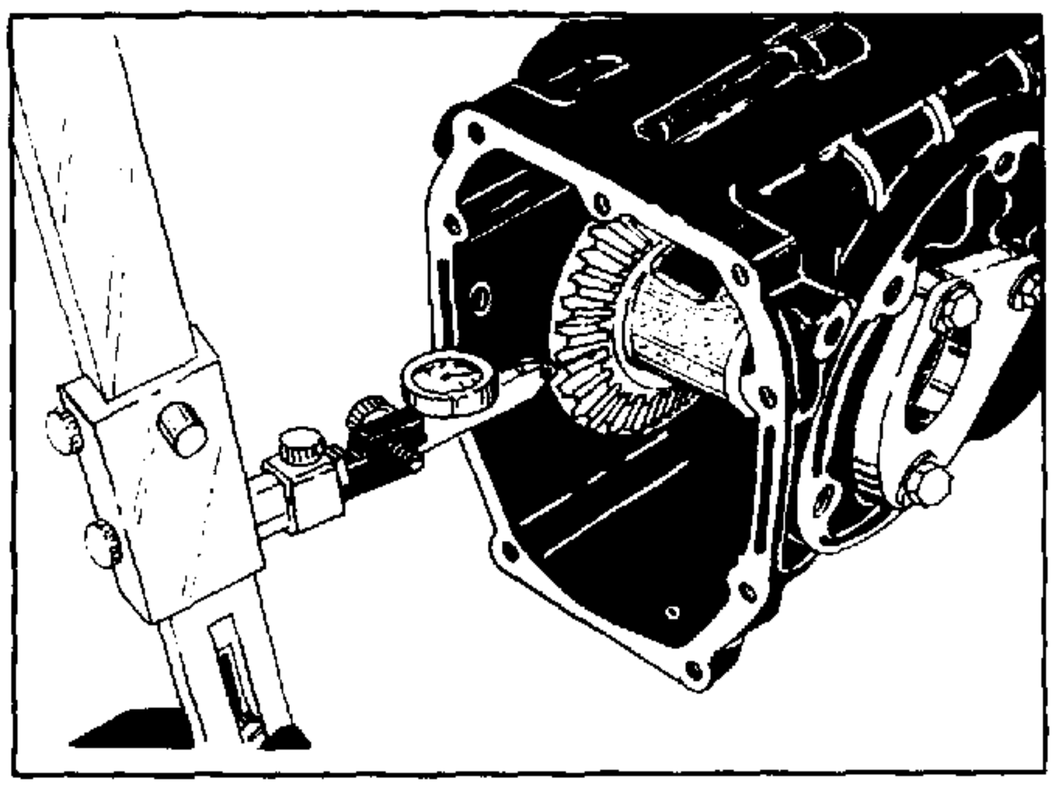

FIGURE 5.

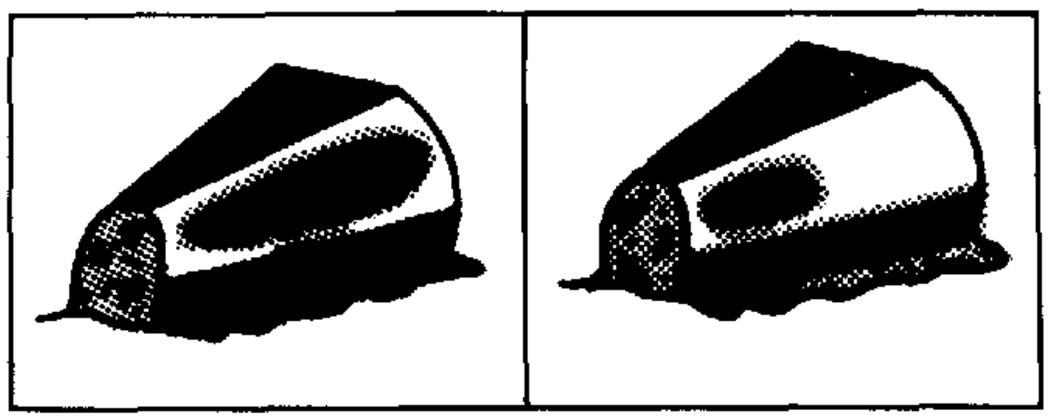

FIGURE 6A and 6B.

NOTE: Hand roll testing should produce a pattern as shown in figure 6B.
In use when load and deflection increase, the pattern will elongate as in Figure 6A.

5.227 c. Tooth contact check; brushing gear with red oxide or rubbing on a thin coat of prussian blue. (Figure 6)

5.23 Ring gear damaged:

5.231 If ring gear has been damaged in tooth area it is very likely that the mating drive pinion also has been damaged and must be replaced. See section 6.00 for removal instructions.

5.232 If upon careful examination the pinion shaft proves not to be defective, the ring gear can be replaced with a ring gear-diff. housing subassembly.

5.233 Each time a new gear or pinion is used, a new shim-pack must be devised for the left and right side placed below the bearing retainers, starting with single or multiple shims totalling .014". When assembled, test a, b and c must be performed and the results fall within the limits set forth. By trial and error the shim thickness is increased to reduce preload, decreased to increase preload and shifted from left to right to increase backlash, and right to left to decrease it. This procedure must be repeated until all criteria are being met.

5.24 Oil leaks: Retorque bolts to 360 inch/lbs. If not effective, replace rear cover plate gasket using method as in 5.113-5.114.

5.25 The drawbar bracket is designed to pull only light loads such as utility and garden carts not exceeding a steady pull of 75 lbs. When this limit is exceeded by pulsating loads for extended time periods the bolts can first loosen up and subsequently work out of the casting. To save the expense of replacing the axle housing, coil threaded inserts can be installed.

5.26 Tapered rear axle bearings: Remove differential, steps shown in par. 5.20.

5.261 Using appropriate pullers, extract the race from the bearing retainer and the cone from the differential housing. See figure 7.

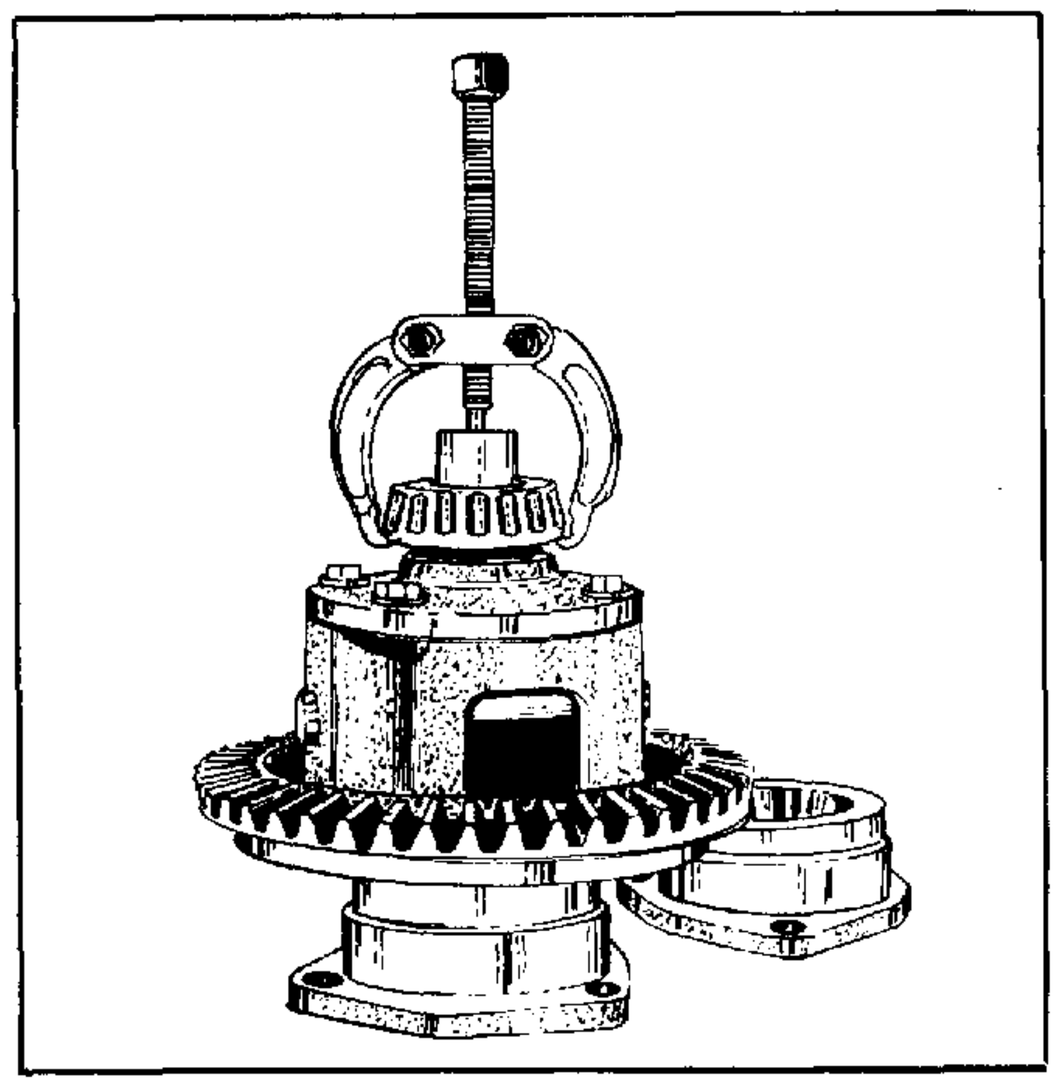

FIGURE 7.

ADAPTOR HOUSING
Section 6

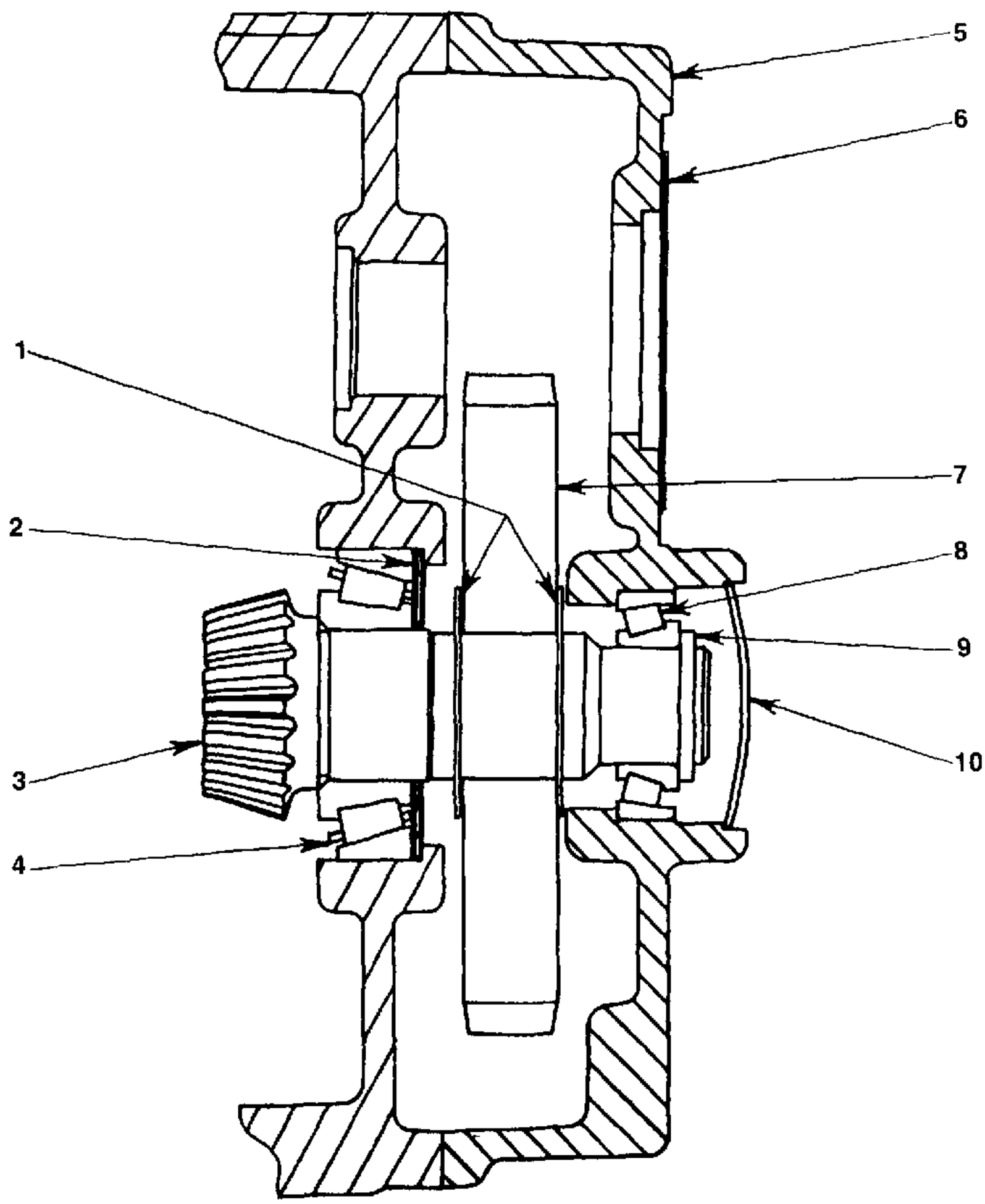

1. Snap Rings
2. Shims
3. Pinion Shaft
4. Roller Bearing Large
5. Adapter Housing
6. Gasket
7. Reduction Gear
8. Roller Bearing Small
9. Retainer-Select
10. Expansion Plug

SECTION 6: REDUCTION HOUSING ASSEMBLY

6.10 Oil leaks: Retorque all fasteners to 360 inch/lbs. If this is not successful to stop the leak, disassemble followed by resealing as described in the following section is necessary.

6.11 *Servicing this section requires splitting of the* tractor and removal of the hydro.

Begin by cleaning the entire axle assembly and then proceed by removing the oil plug and draining the oil.

The oil in the hydrostatic transaxle is shared by both axle and hydraulic transmission, thus making it imperitive to discard the oil to avoid contamination. Use quarts of SAE- oil to recharge the system.

6.111 Remove the Hydro transmission after loosening the four mounting bolts and compression nut securing the oil tube to the housing. For servicing the Sundstrand hydraulic transmission, see section 7.

6.12 Removal of Reduction Gear Housing; remove expansion plug from front center of housing by drilling a hole into the center of the plug, insert a tool into the hole and pry out without damaging the bore needed for resealing.

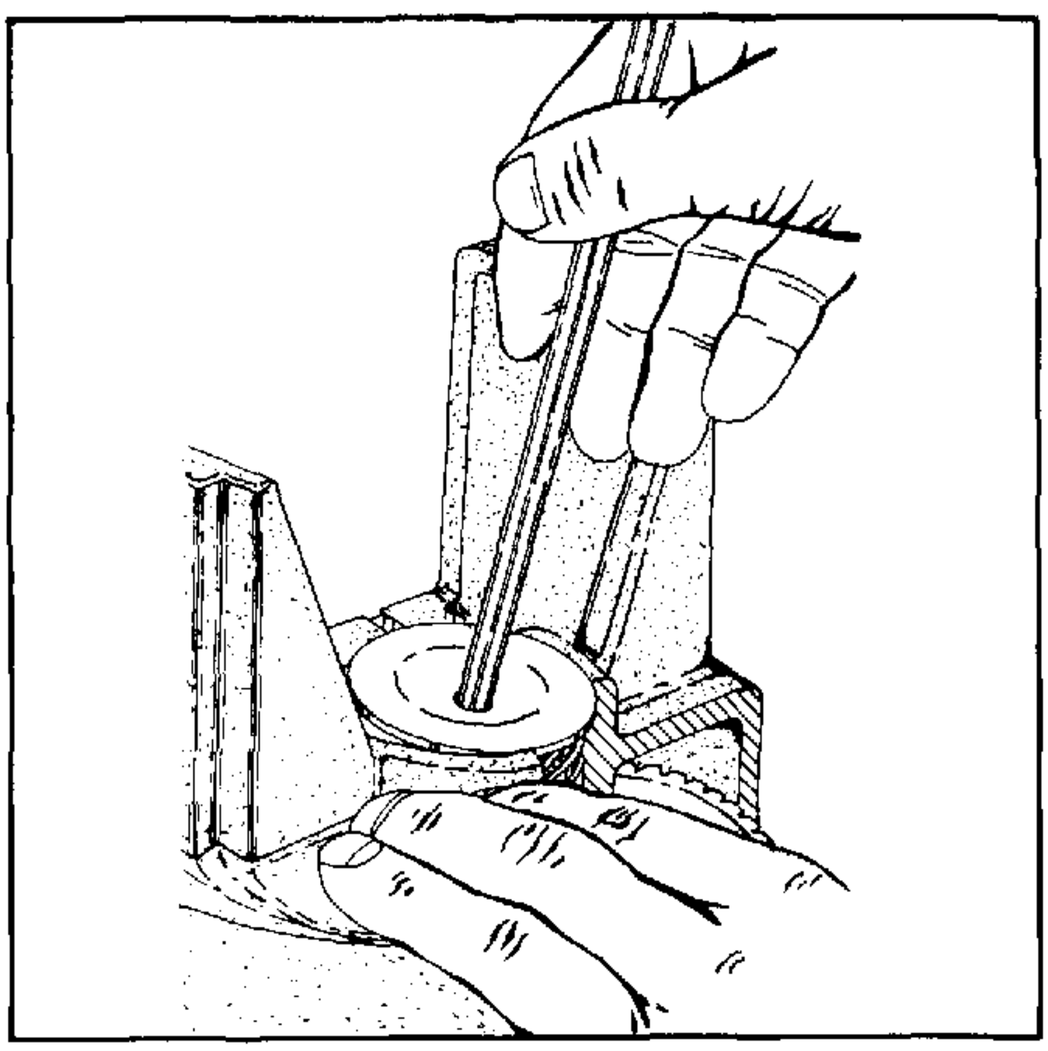

FIGURE 8.

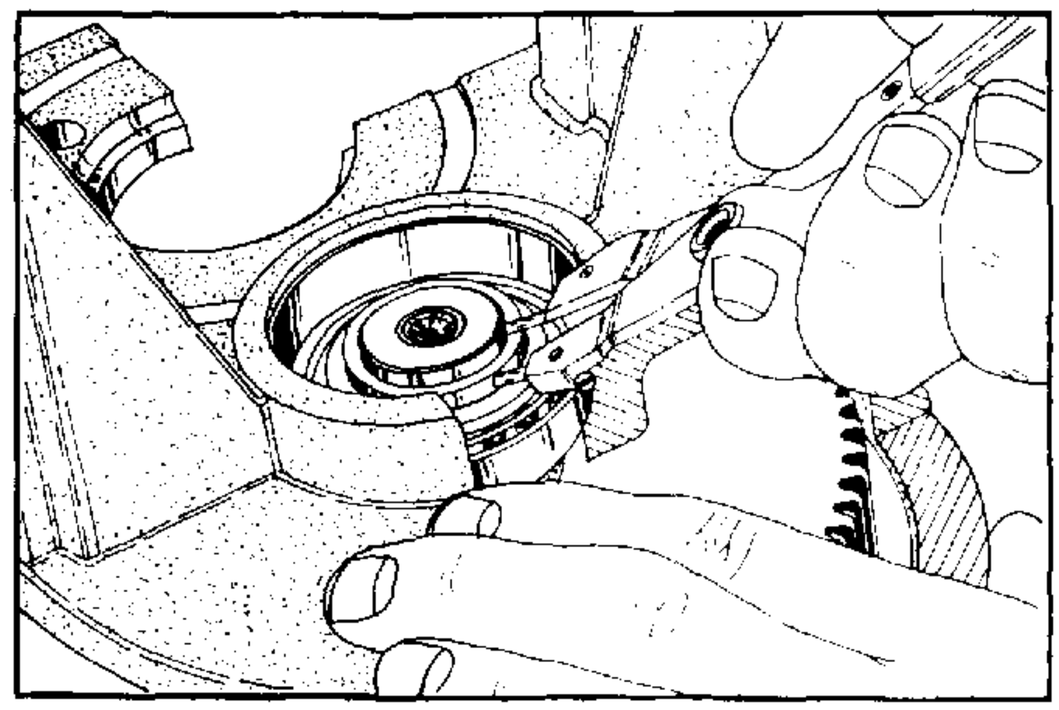

FIGURE 9.

6.121 Remove pinion shaft retaining ring (Eaton) with special pliers without damaging the ring-groove. Discard old ring.

6.122 Remove four (4) bolts (2 are located inside axle hsg.). Tap to break seal and carefully separate the axle housing from the adaptor housing tapping the pinion shaft lightly to facilitate separation. Inspect components and refer to the appropriate section for repair.

6.13 Adaptor housing reinstallation.

6.131 Once the repair is complete, remove all old gasket material from both sealing surfaces using a scraping tool or Locktite spray on "gasket remover." Feel for nicks and burrs and remove with stone or flat scraper.

6.132 Spray both surfaces with Locktite primer and apply a thin but uniform coat of #515 liquid gasket. Lift housing into position, line up with pinion shaft and dowels and tap down with plastic hammer. Make sure surfaces approach each other parallel. Stop as soon as gap is at about 1/8". Insert bolts and pull down evenly until recommended torque has been reached.

6.133 Replace Eaton retaining ring with one of the exact thickness as previously removed. Insert expansion plug and deform center evenly until sealed.

6.14 Reduction gear failure.

6.141 If the reduction gear is found to be in need of repair or replacement, it can be removed after step 6.12, simply by taking off the retaining ring and pulling the gear off the pinion shaft. After the repair is complete, replace the retaining ring and proceed with step 6.13.

6.15 Pinion shaft replacement.

6.151 Failure to either the ring or pinion gear usually causes the mate also to be damaged or destroyed, make sure you inspect both parts

carefully! To be able to remove the pinion, first follow the instruction in 5.22 removing the differential assembly. Following steps 6.12 removing retaining rings and the reduction gear, the pinion shaft can now be tapped out. Caution, it is not recommended to reuse the roller bearing adjacent to the damage area. Replace with new bearings but make sure to reuse shim-pac below the outer race as it is factory selected to make up for housing variation.

6.16 Pinion shaft bearing preload.

6.161 After steps 6.131 and 6.132 have been accomplished, a new Eaton retaining ring thickness must be established to make up for the difference in size of the new parts installed. Available ring sizes are 0.131; 0.125; 0.119; 0.113; 0.107; 0.10. After pushing or lightly tapping the pinion assembly to a stop, use the available rings until one fits the open portion of the ring groove, then pick the next thicker ring (+ 0.006) and press into groove.

When turning the pinion shaft, a slight drag should be noticed (approx. 2 inch-lbs.). If the shaft spins freely, a thicker ring is needed, a condition too tight to the feel requires a thinner ring.

6.162 Reinstall the differential described in 5.226-5.233 and test accordingly.

6.163 Reinstall axles and backplate, see 5-113-5.114.

6.17 Roller bearing replacement.

6.171 If bearings feel rough, or look discolored from overheating, show wear marks or other blemishes, bearings must be replaced.

6.172 Remove bearing race and cone by pressing or tapping using a matching sized soft arbor or a wheel puller. Whenever bearings have been replaced, the existing shim pacs must be modified or retaining ring must be changed at the drive pinion, to accommodate the new dimensions.

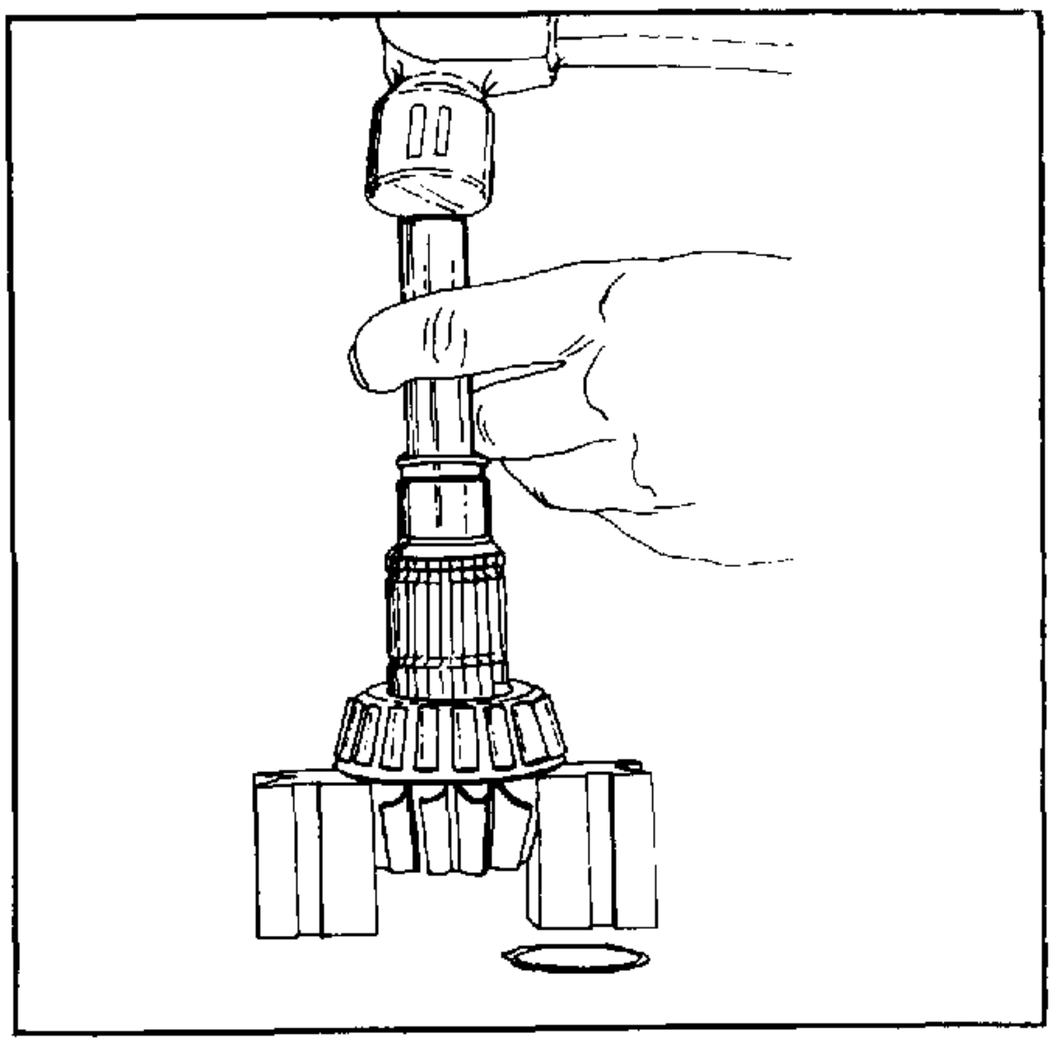

FIGURE 10.

6.18 Recharging with oil.

6.181 After all parts are in place and properly torqued, including the drain plug; the transmission has been reinstalled into the tractor with all controls connected, the hydraulic transaxle is to be filled with 4 quarts and the gear transaxle (section 1 & 2) with 7 quarts of Hytran oil.

6.182 After operating the tractor for a few minutes, park on level ground and check dipstick. Correct level to mark on dip stick by adding or draining oil.

DISC—CLUTCH FOR 6-SPEED

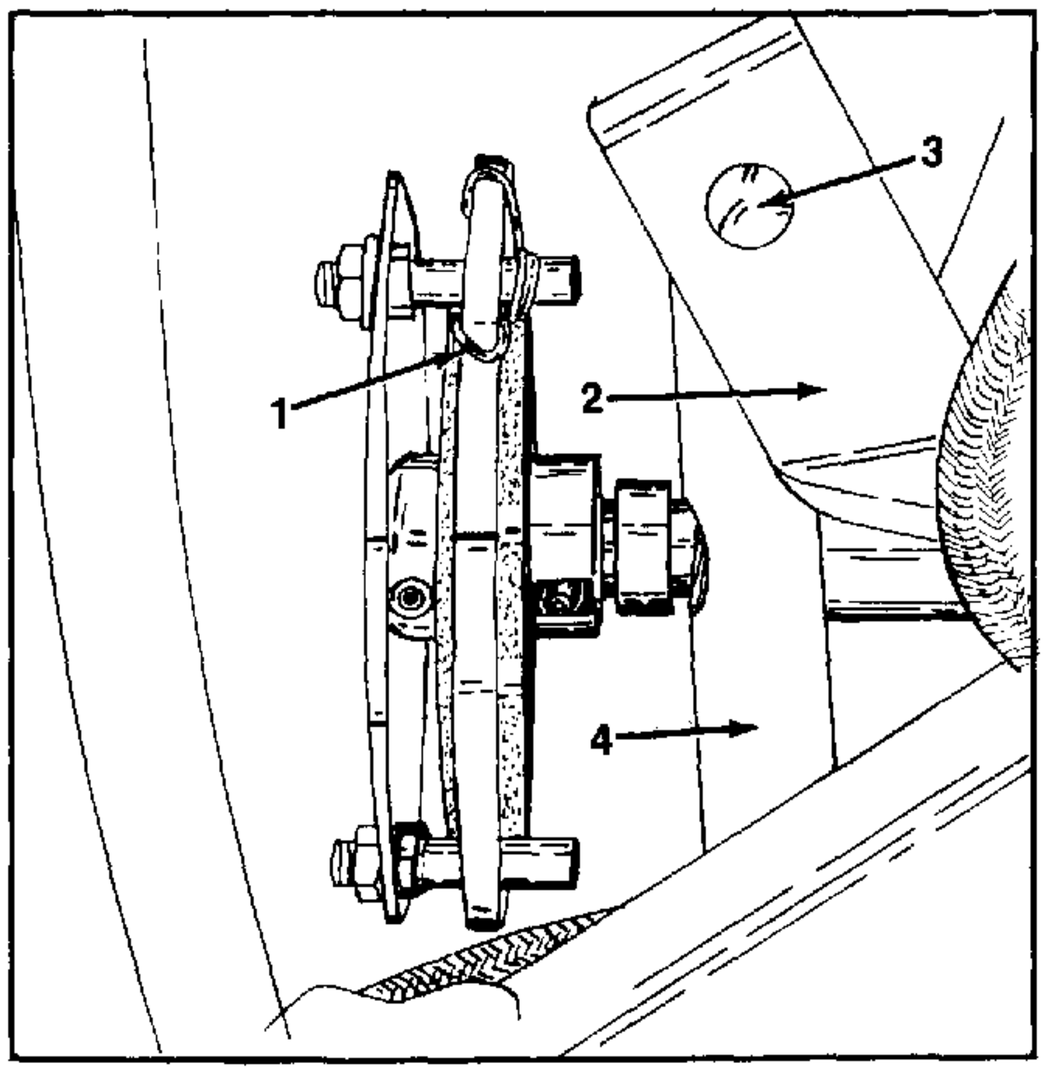

FIGURE 1.

1. Drive Disc Spring
2. Hanger Assembly
3. Pivot Pin
4. Clutch Release Lever

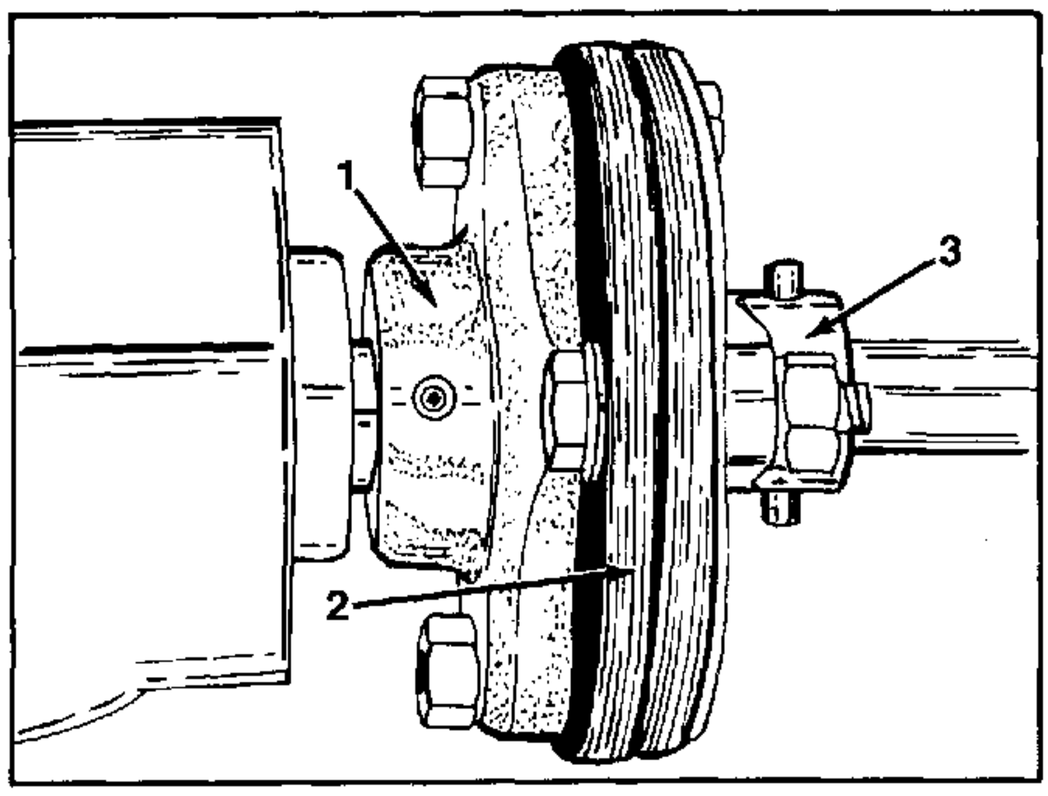

FIGURE 2.

1. Drive Shaft Coupling
2. Flex Coupling
3. Coupling Arm

REMOVAL AND DISASSEMBLY

1. Remove the engine side panels.

2. Remove the frame cover.

3. Disconnect the battery ground cable.

4. Remove the pivot pin and hanger assembly. Remove the drive disc spring.

5. Disconnect the clutch release rod from the clutch release lever.

6. Remove the bolts from the flex coupling.

7. Drive out the drive shaft coupling roll pin.

8. Drive out the coupling arm roll pin.

9. Slide the couplings forward on the clutch shaft and move the shaft to the side of the transmission or creeper input shaft.

10. Remove the clutch shaft assembly including pressure plates, drive plate and clutch release lever.

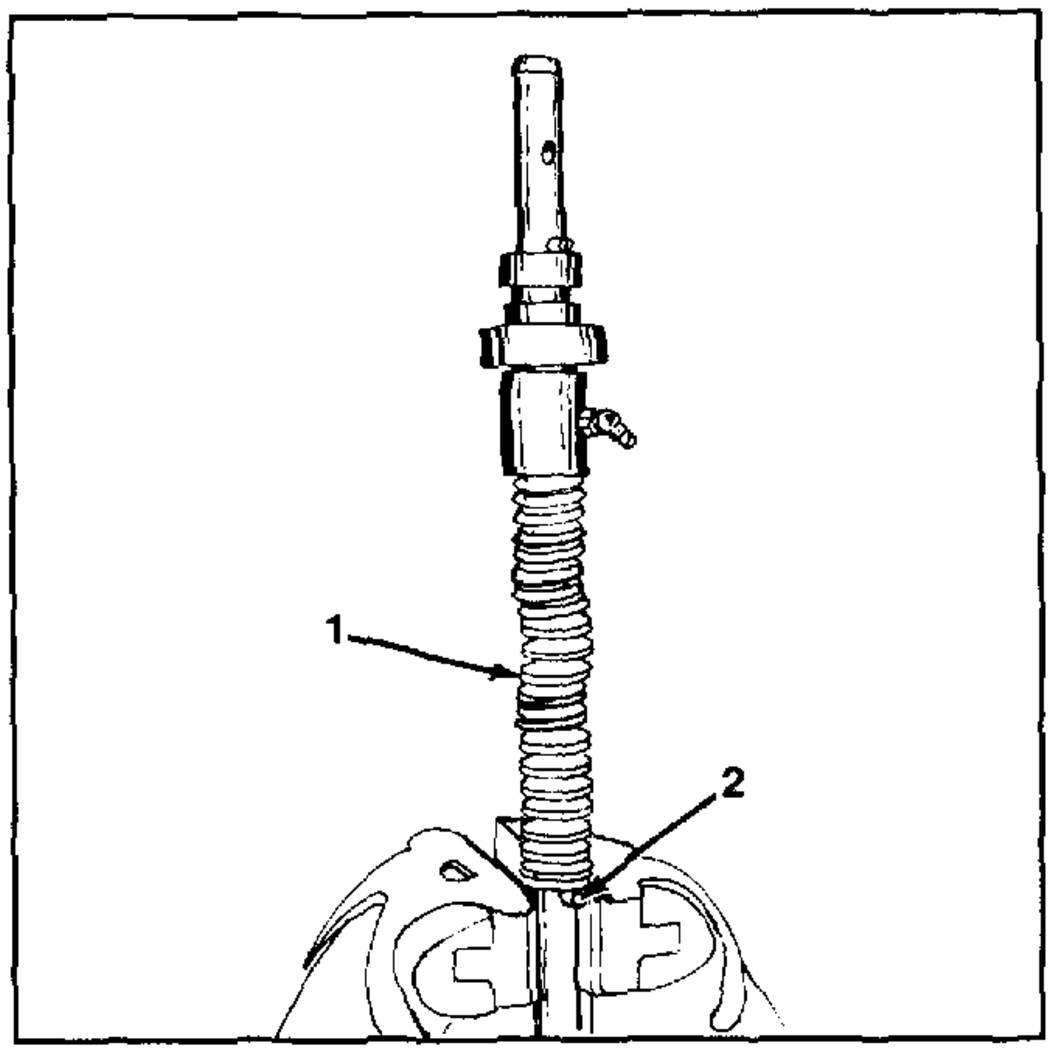

FIGURE 3.

1. Loading Spring
2. Coiled Pin

11. Remove the drive plate, pressure plate and clutch release lever from the clutch shaft.
12. Using a vise equipped with brass jaws, clamp the clutch shaft snug and tap the shaft down enough to slightly compress the spring. Remove the coiled spring pin.

CAUTION! Slowly release the vise allowing the spring to expand as the shaft slips through the vise jaws.

INSPECTION AND REPAIR

1. Inspect the clutch driving disc for wear from pressure plates and for elongated holes from the driving plate pins. Disc must be free of grease and oil.
2. Inspect both pressure plates for warping and wear on their contact faces.
3. Inspect the slotted hub of the rear pressure plate for pin wear. If the slots are cupped from pin wear, the plate must be replaced.
4. Inspect the teaser spring ends. Ends should be rounded to prevent gouging the clutch shaft. Check the spring tension. (Refer to Specifications.)
5. Inspect the loading spring ends. Ends should be rounded to prevent gouging the clutch shaft. Check the spring tension. (Refer to Specifications.)
6. Inspect the clutch release lever channel for wear on the curved area where contact is made with the release bearing.
7. Inspect the clutch shaft for wear at the front (pilot bushing area). Pin holes should not be "wallowed out" or elongated.
8. Release bearing area and teaser spring area should be free from scoring.
9. Clutch shaft coupling pin holes should not be "wallowed out" or elongated.

REASSEMBLY AND INSTALLATION

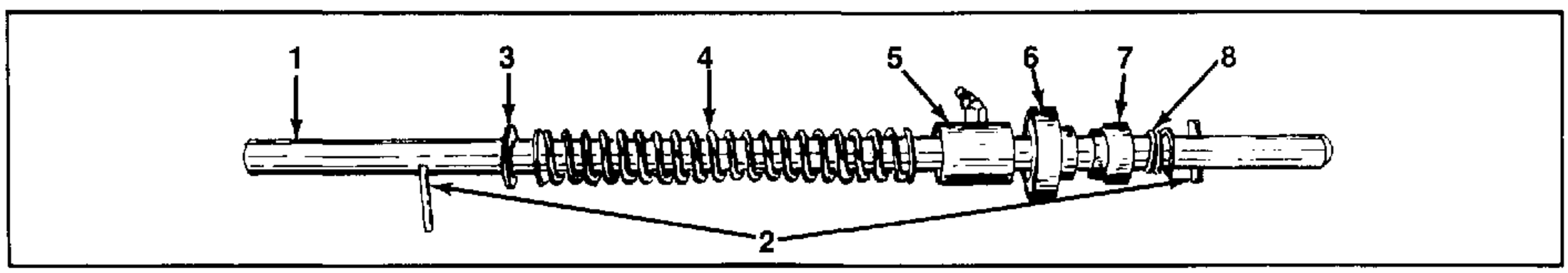

FIGURE 4.

1. Clutch Shaft
2. Coiled Pin
3. Washer
4. Loading Spring
5. Bushing
6. Throw Out Bearing
7. Spring Spacer
8. Teaser Spring

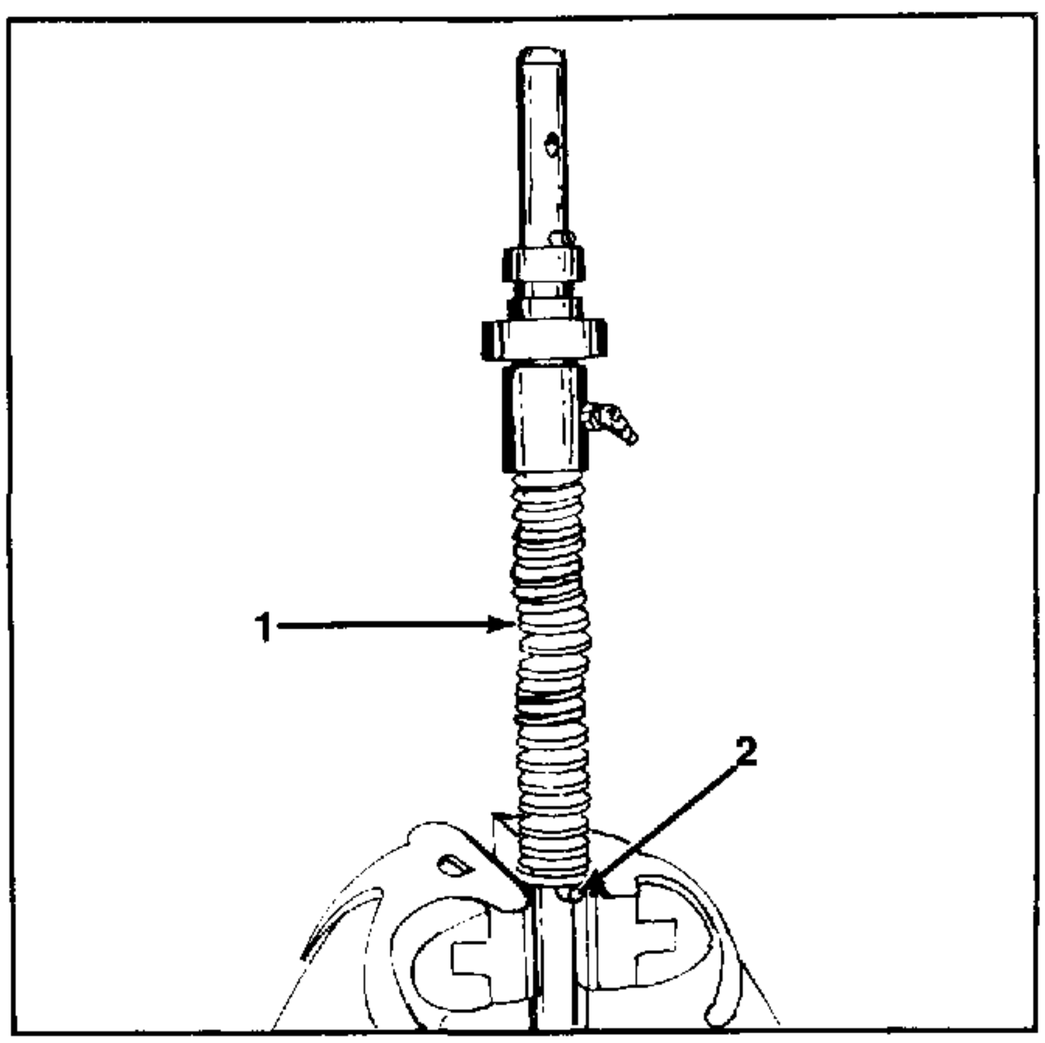

FIGURE 5.

1. Loading Spring
2. Coiled Pin

1. Assemble the front coiled spring pin, teaser spring, spring spacer, throwout bearing, bushing, loading spring and washer onto the clutch shaft.
2. Using a vise equipped with brass jaws, clamp the clutch shaft snug. Tap the shaft down enough to compress the loading spring and install the rear coiled spring pin.
3. Continue reassembling the clutch by reversing the disassembly procedure.

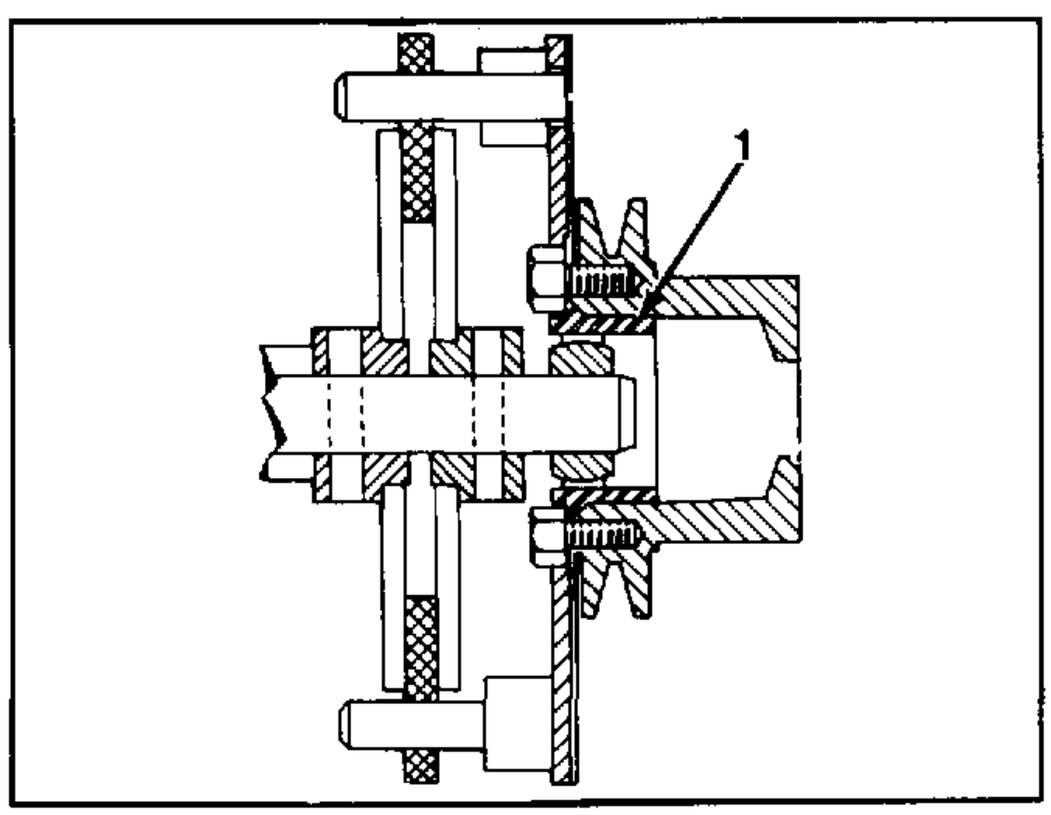

FIGURE 6.

1. Drive Plate Bushing

NOTE: Before installing the clutch shaft assembly, pack the clutch drive plate bushing and coat the clutch shaft with 139 933 C1 powered bushing grease.

4. Install the clutch shaft assembly in the tractor by reversing the removal procedure.
5. Adjust the clutch.

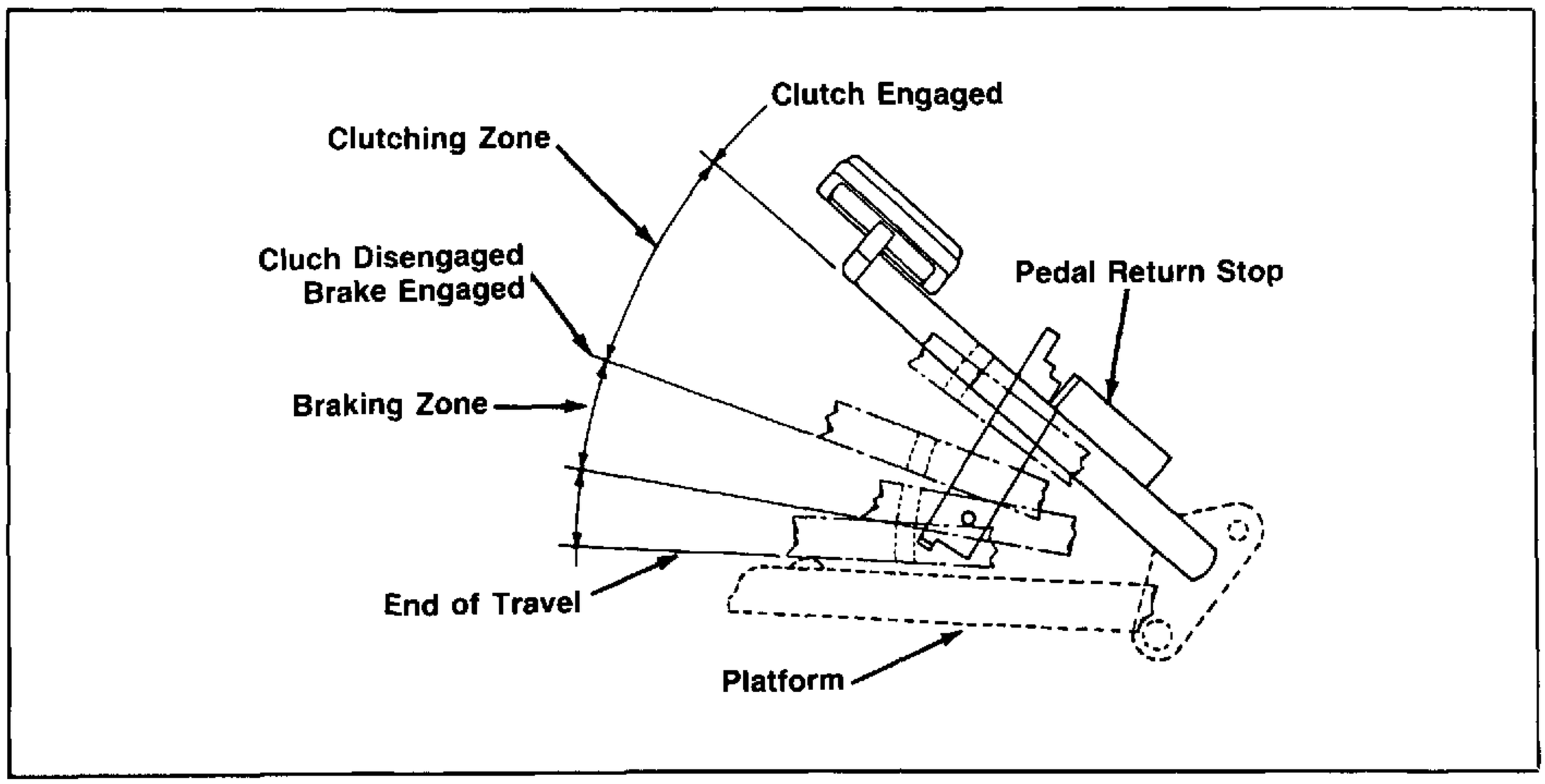

FIGURE 7.

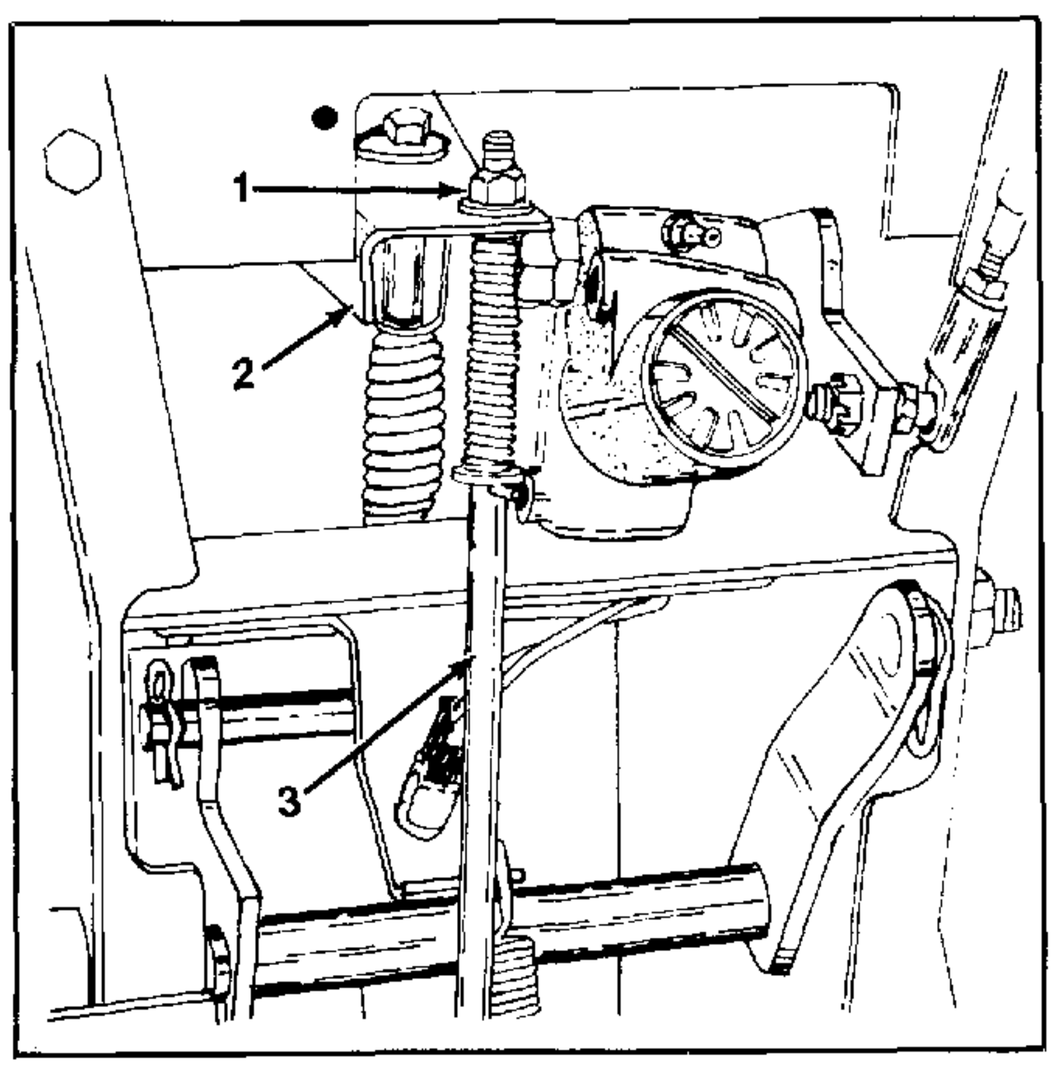

FIGURE 8.

1. Adjusting Nut
2. Clutch Release Lever
3. Release Rod

1. Adjust the clutch linkage. It is important that a clearance of 1.27 mm (.05 inch) be maintained between the clutch release lever and the clutch release bearing. In order to maintain this clearance, the pedal should have a free movement of approximately 7 mm (9/32 inch). This measurement is taken at the point of contact of the pedal arm with the front edge of the pedal return stop. When it is necessary to adjust the clutch, turn the adjusting nut on the clutch release rod in or out as required to get the proper measurements.

HYDROSTATIC TRANSMISSION (SUNDSTRAND) GENERAL INFORMATION

Refer to this page for additional reference to the parts described during service procedures in this manual.

Many of the component parts have highly polished machined surfaces. Extreme care must be taken to prevent damage during disassembly and reassembly.

Coat hands with clean Hytran before handling the polished surfaces of the parts in order to minimize rust formation.

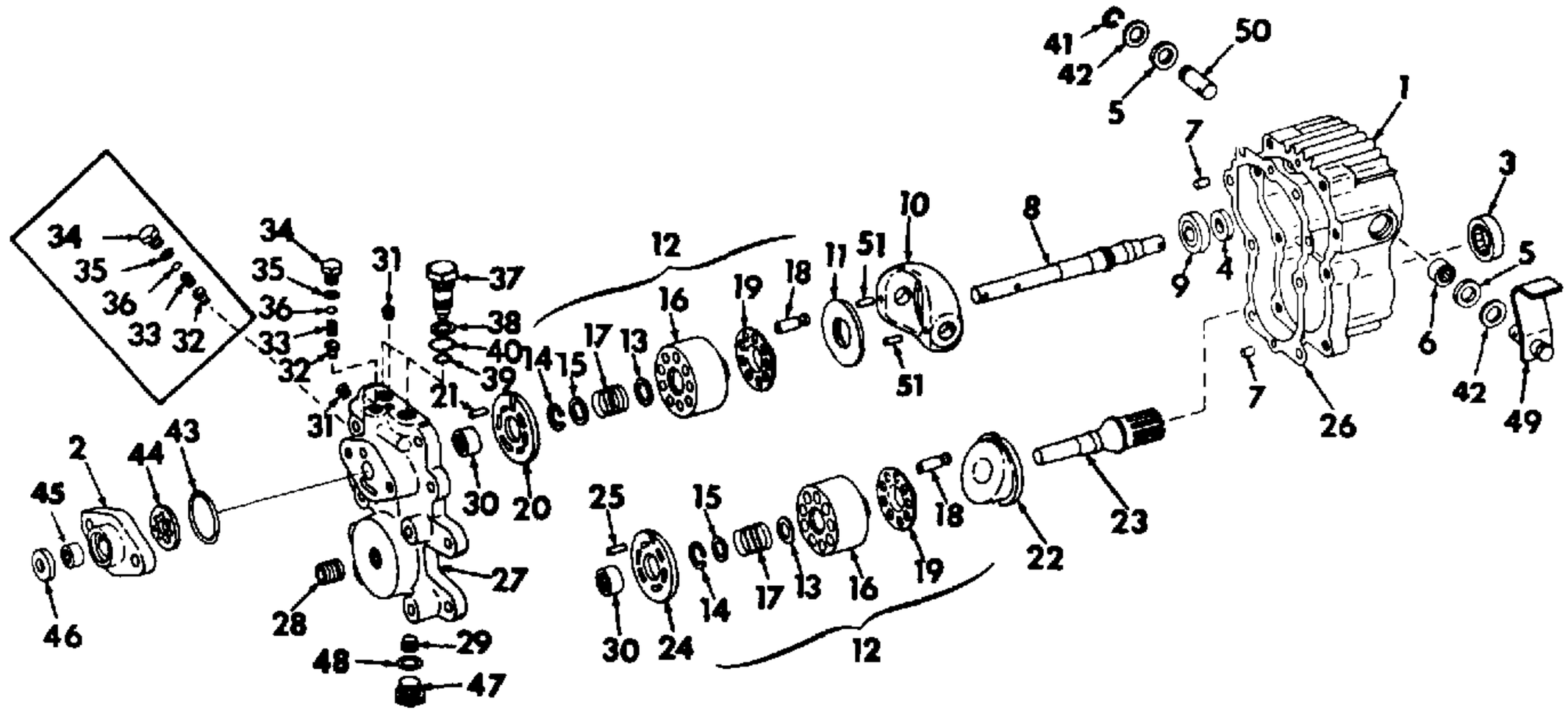

FIGURE 1.

1. Housing	18. Piston Assembly	35. O-Ring
2. Charge Pump Housing	19. Retainer	36. Shim
3. Bearing	20. Plate	37. Valve Assembly
4. Seal	21. Pin	38. Washer
5. Seal	22. Swash Plate*	39. O-Ring
6. Bearing	23. Shaft	40. O-Ring
7. Pin	24. Plate	41. Ring
8. Shaft	25. Pin	42. Washer
9. Bearing	26. Gasket	43. O-Ring
10. Swash Plate	27. Housing	44. Rotor Assembly
11. Plate (2)	28. Fitting	45. Bearing
12. Kit	29. Plug	46. Seal
13. Washer	30. Bearing	47. Plug
14. Ring	31. Plug	48. O-Ring
15. Washer	32. Cone	49. Shaft Assembly
16. Block	33. Spring	50. Shaft
17. Spring	34. Plug	51. Pin

*Swash Plate (22) is cast into housing (1) on later models.

TROUBLESHOOTING

If the tractor will not move or moves slowly in both directions, a preliminary check of the power train can be made as follows:

1. Check the oil level. Change the oil filter.
2. Remove the frame cover.
3. Check the suction tube and fittings for tightness.
4. Support the tractor so both rear wheels are off the ground and free to move. Block the front wheels. Start the engine.
5. Check the drive shaft rotation into the charge pump and out the rear of the transmission case for mechanical break down. Work the control lever to make sure there is no binding in the cam plate or linkage.

   If the shaft does not turn, remove and overhaul the transmission. If the shaft is turning, continue with the following steps.
6. If the tractor moves slowly or not at all in only one direction, remove both check valves and switch positions. If this changes the direction in which the problem originally occurred, replace the respective check valves.
7. If interchanging check valves failed to reveal the problem, check charge pressure. Refer to Hydraulic Lift-Pressure Check on page 2-94.

CHECK VALVE SERVICE

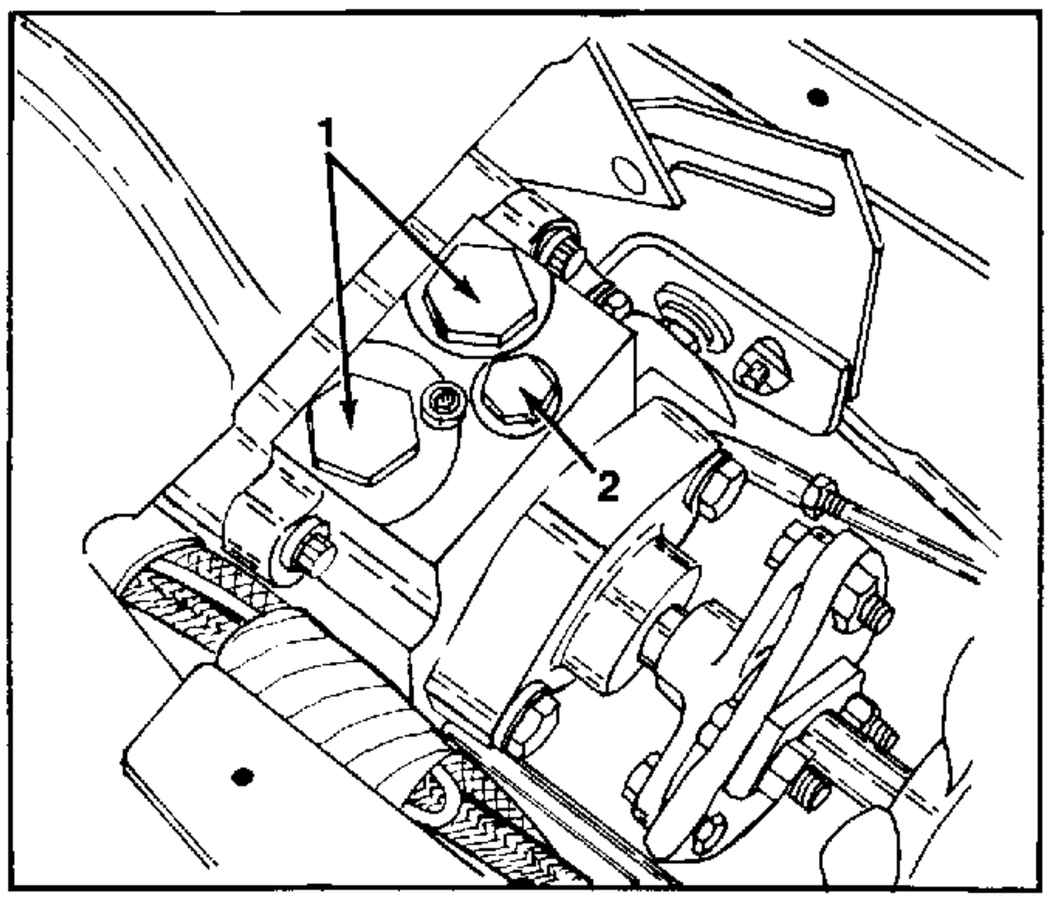

FIGURE 2.

1. Check Valves
2. Charge Pressure Relief Valve

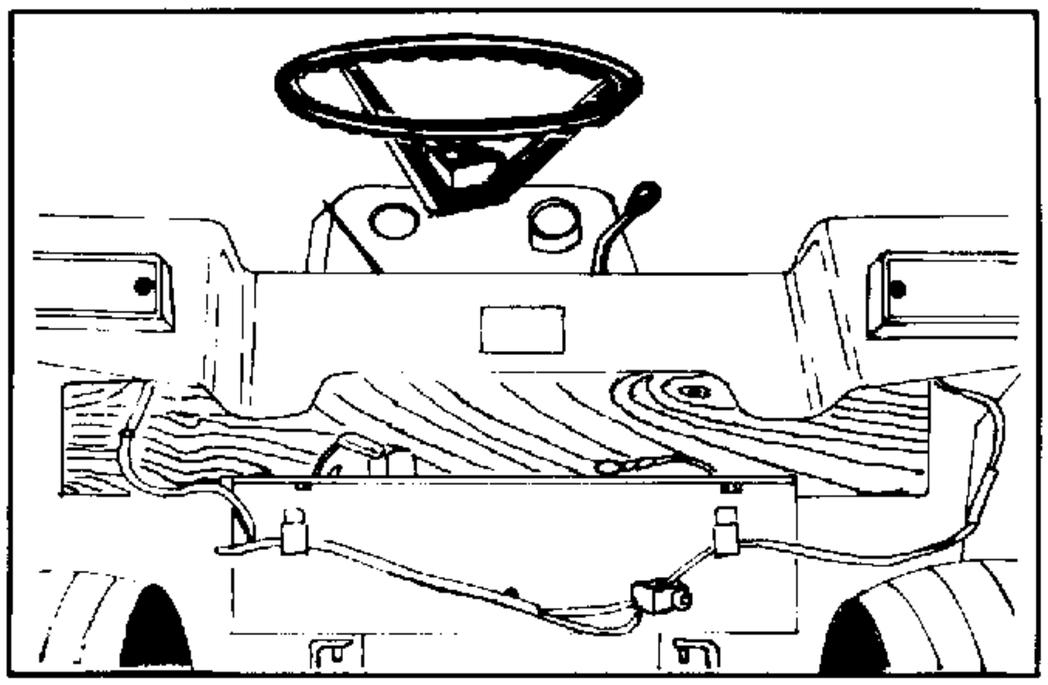

FIGURE 3.

The check valves are serviced as an assembly only. Servicing of the valve is limited to replacement only, except for external O-rings and back-up washer.

> **CAUTION!** Any time the engine is shut off, the brake pedal must be locked to prevent the tractor from rolling.

NOTE: Steps 2 thru 4 apply only to 682 and 782.

1. Remove the frame cover.
2. Remove all bolts and screws securing the rear deck to the chassis except the front two screws located on each leg of the rear deck.
3. Disconnect seat safety start switch from the rear deck.
4. Raise rear deck and block into position required for access to check valves.
5. Remove valves and wash valves in clean solvent.
6. Check the valves for dirt, paint corrosion and free plunger movement. Replace any valve in doubtful condition.
7. Replace all O-rings and back-up washers.
8. Thoroughly lubricate the valves in clean Hy-Tran and install. Apply IH 251 HEP grease to the external ends of the valve spools.

NOTE: The valves are identical, therefore they are interchangeable.

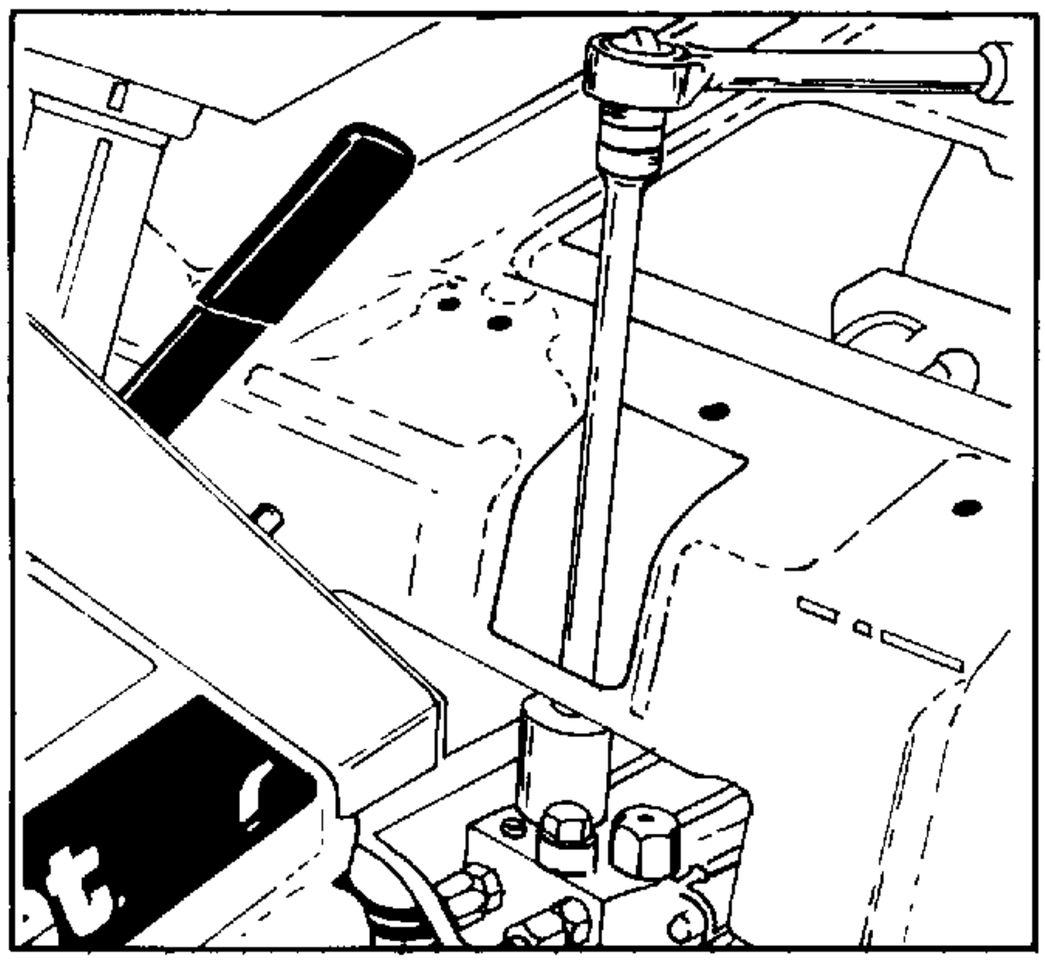

FIGURE 4.

CHARGE PUMP RELIEF VALVE SERVICE

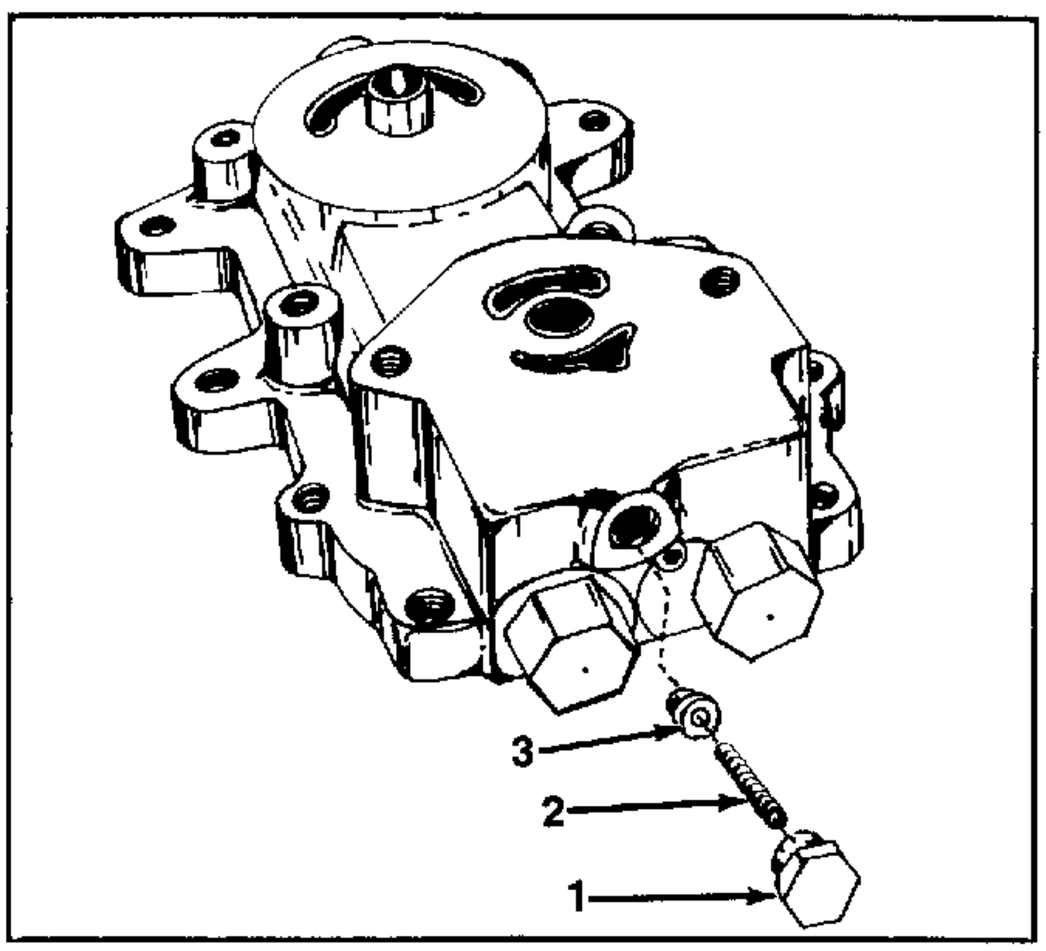

FIGURE 5.

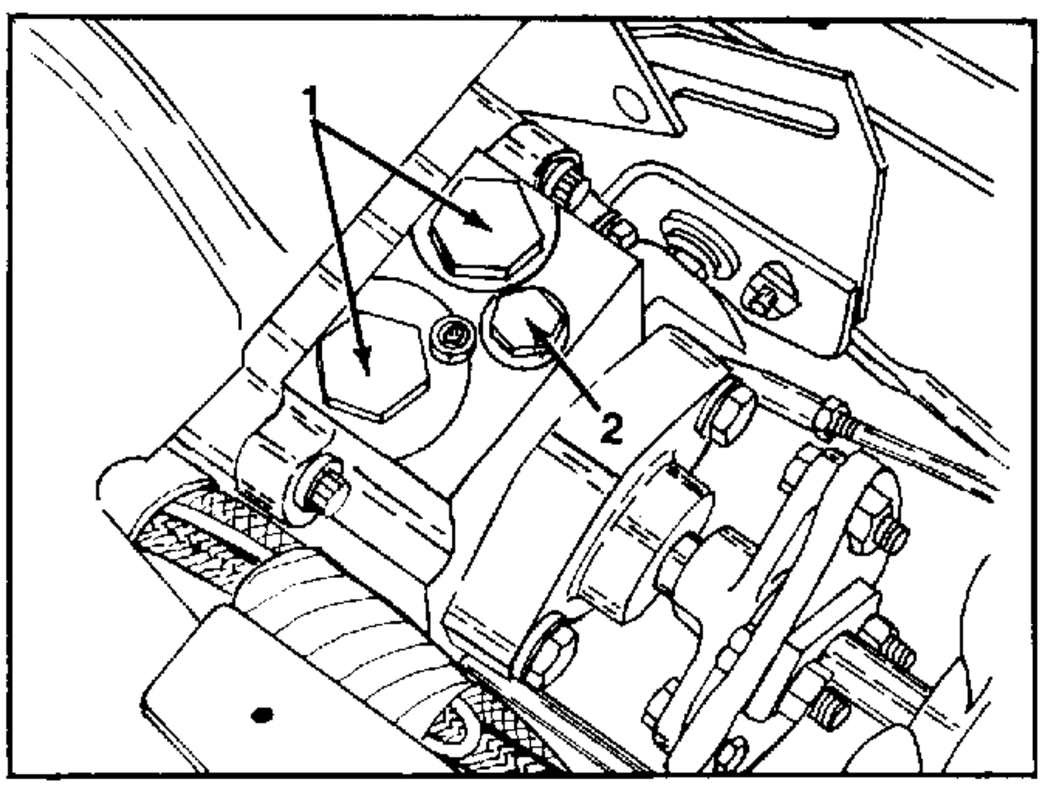

FIGURE 6.

The charge pump relief valve is serviced by removing the frame cover.

1. Remove the relief valve plug, shim (if any), spring and cone from the housing.
2. Wash and dry the components.

1. Plug
2. Spring
3. Cone

3. Check the spring for pitting and rust.
4. Check the cone for wear or damage. Check the valve seat in the housing for dirt, nicks and scratches.

1. Check Valves
2. Charge Pump Relief Valve

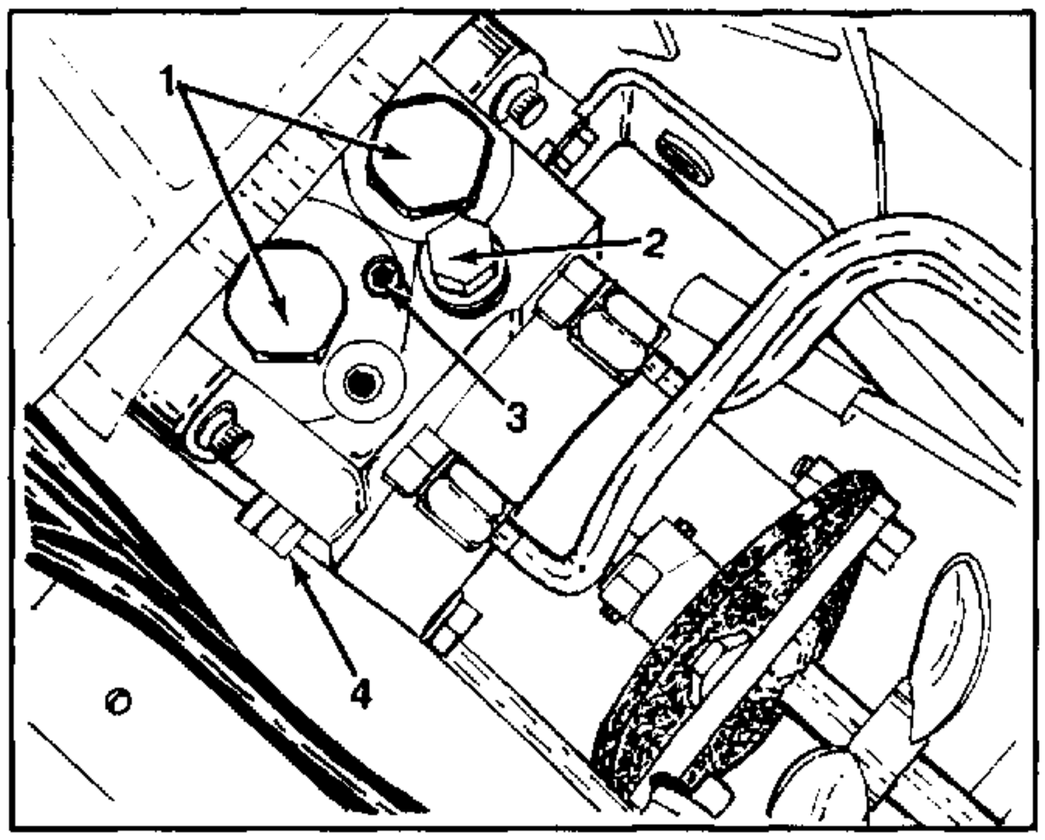

FIGURE 7.

5. Install the relief valve in the reverse order of removal. Use a new O-ring on the plug.

1. Check Valves 2. Implement Lift Relief Valve 3. Test Port 4. Charge Pump Relief Valve

CHARGE PUMP SERVICE

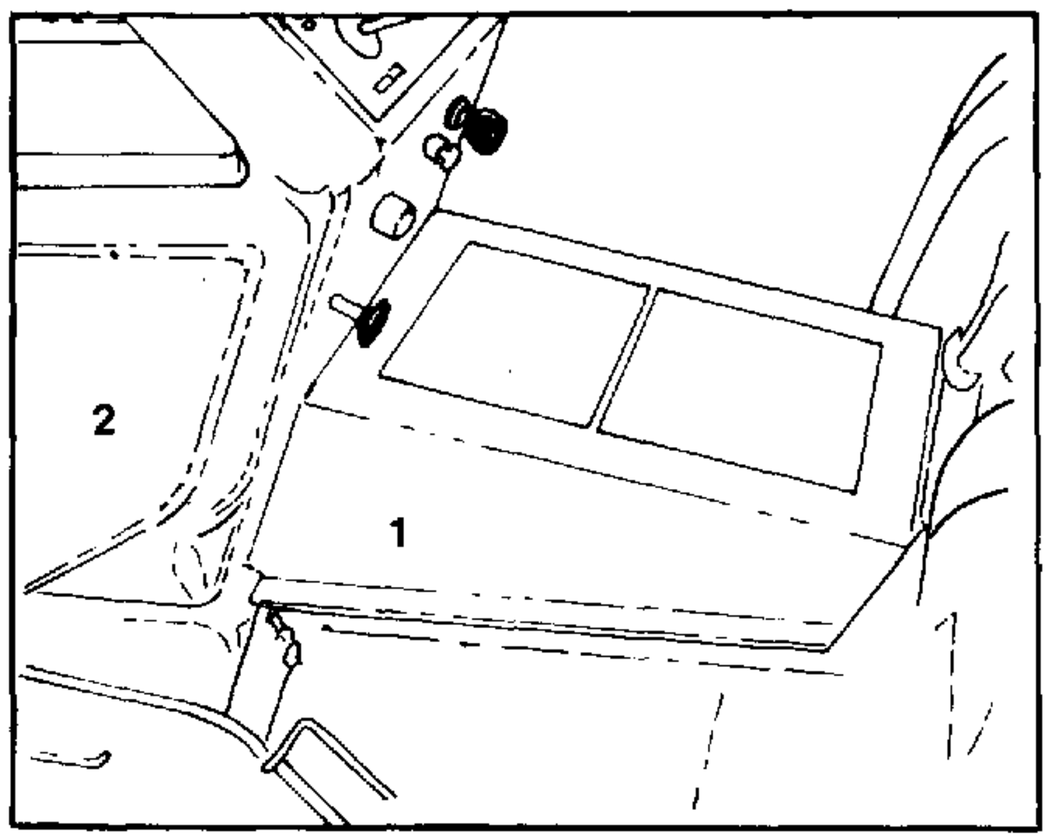

FIGURE 8.

REMOVAL AND DISASSEMBLY
For Models 682 and 782:

1. Remove the frame cover and an engine side panel.

1. Frame Cover 2. Engine Side Panel

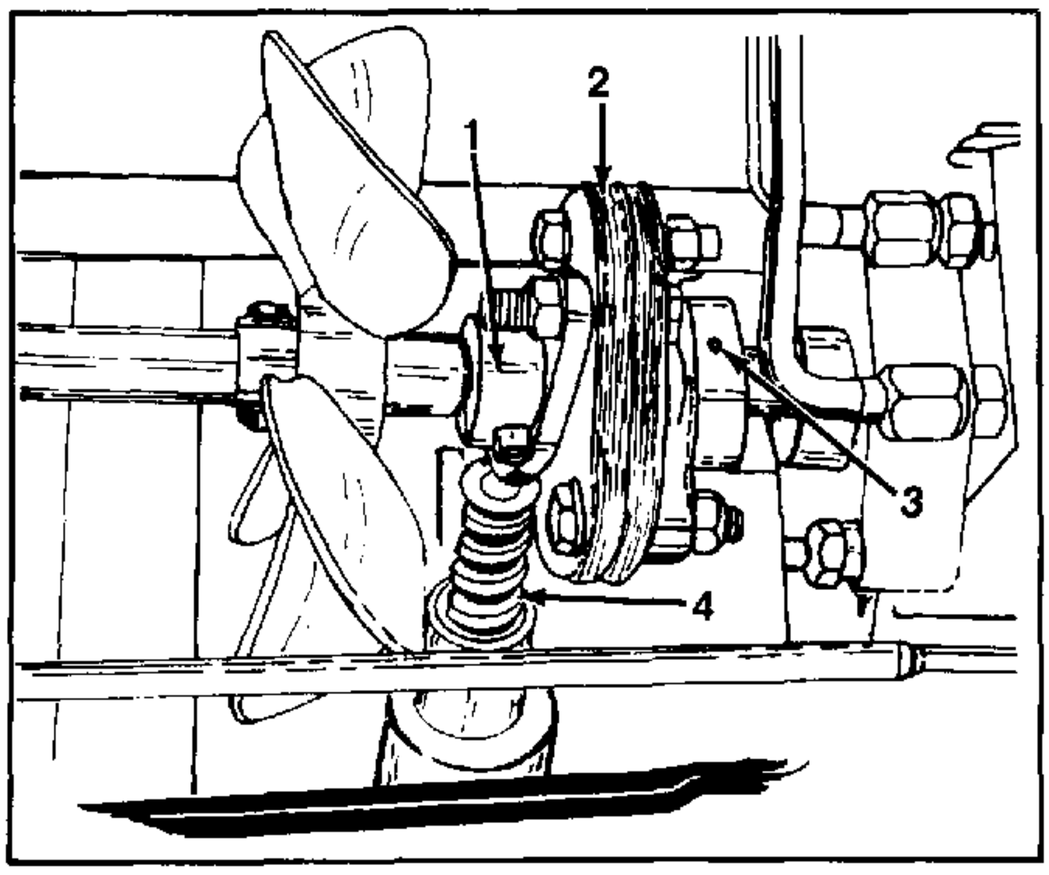

FIGURE 9.

2. Remove the bolts from the flex coupling.
3. Support the drive shaft and drive out the drive shaft coupling roll pin. Slide the coupling forward on the shaft.
4. Drive out the coupling arm roll pin and slide it rearward on the transmission input shaft.

1. Drive Shaft Coupling 2. Flex Coupling 3. Coupling Arm 4. Hydraulic Jack

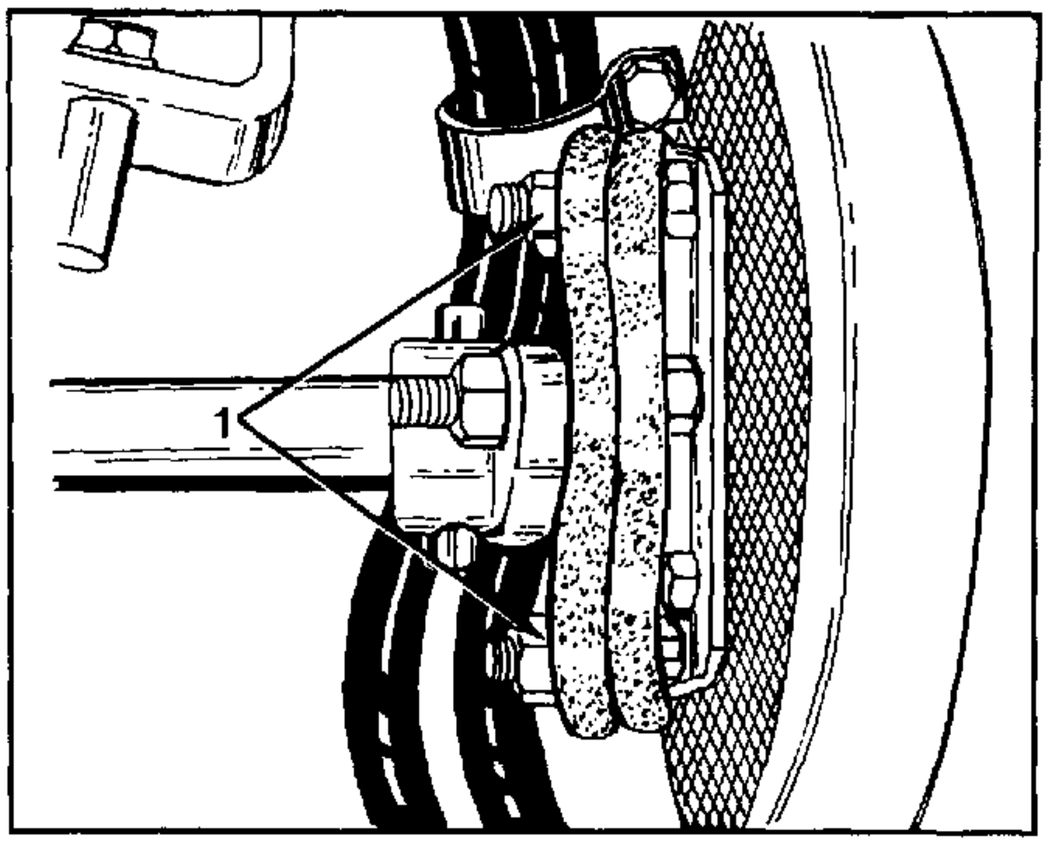

FIGURE 10.

5. Remove the nuts securing the front flex coupling to the flywheel flange and remove the drive shaft.

1. Flywheel Flange Nuts

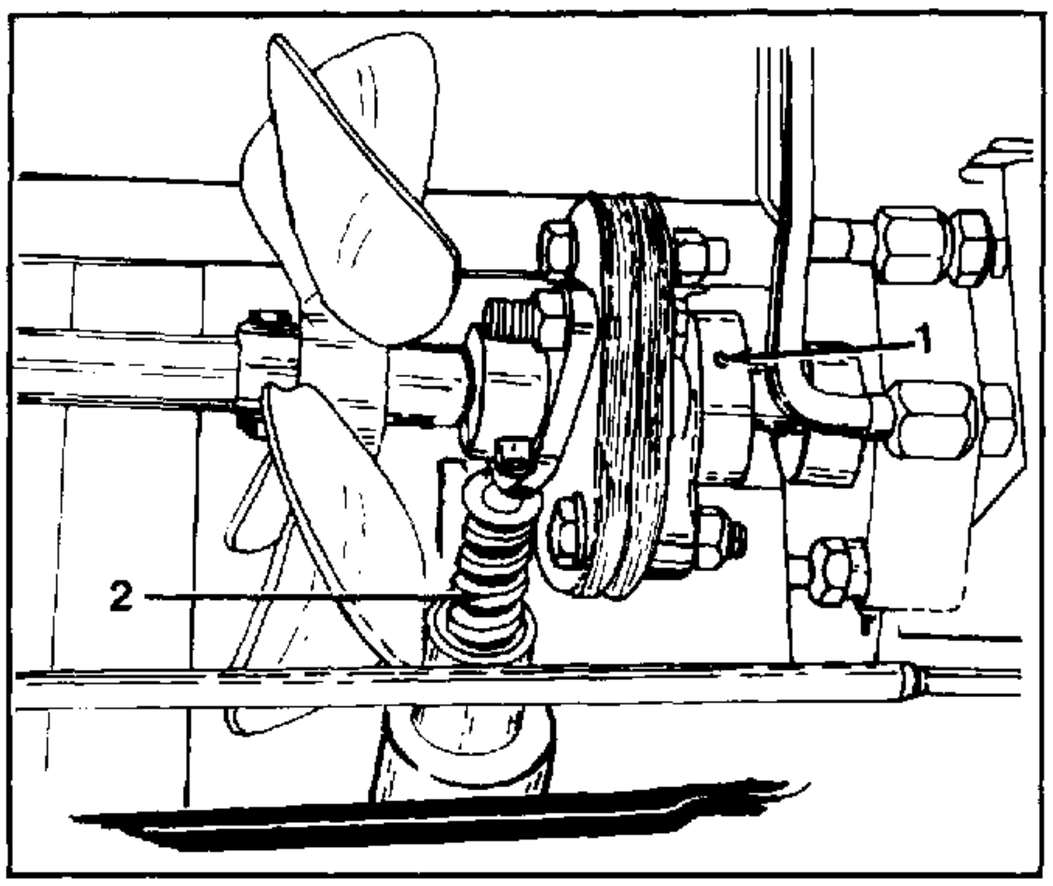

FIGURE 11.

For Model 982:

To service the charge pump it is necessary to remove the drive shaft. For Model 982 the engine must be moved forward for drive shaft removal. Use the following procedure.

1. Raise the hood and remove the engine side panels. Remove the frame cover.
2. Disconnect the headlight wiring and remove the hood and grille as an assembly.
3. Remove the oil filter, support the drive shaft and drive out the coupling arm locating pin.
4. Remove the engine mounting bolts and slide the engine forward until the coupling arm is clear of the transmission input shaft.

1. Locating Pin 2. Hydraulic Jack

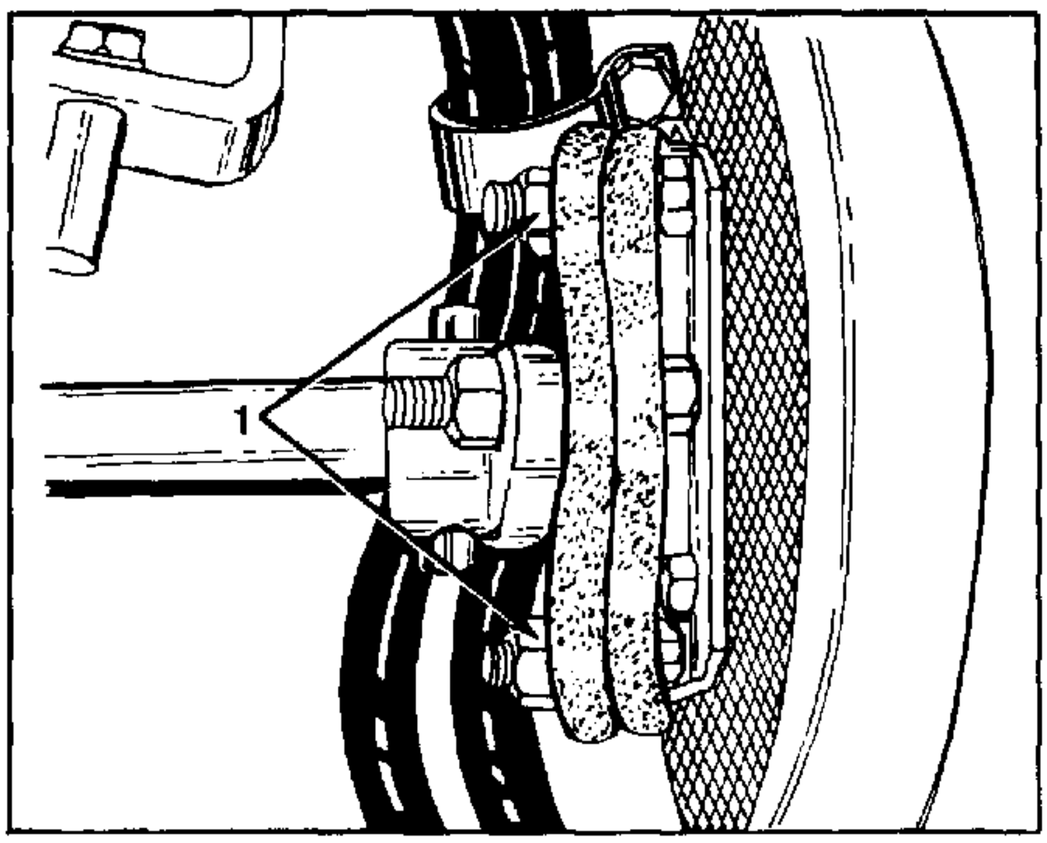

FIGURE 12.

5. Remove the nuts securing the front flex coupling to the flywheel flange and remove the drive shaft.

1. Flywheel Flange Nuts

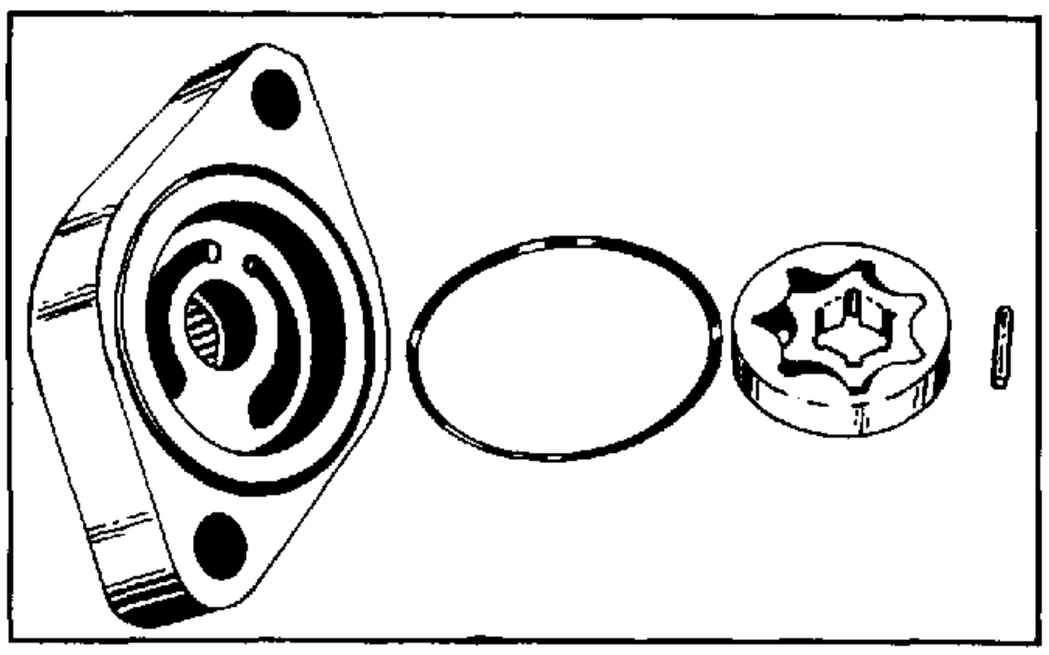

FIGURE 13.

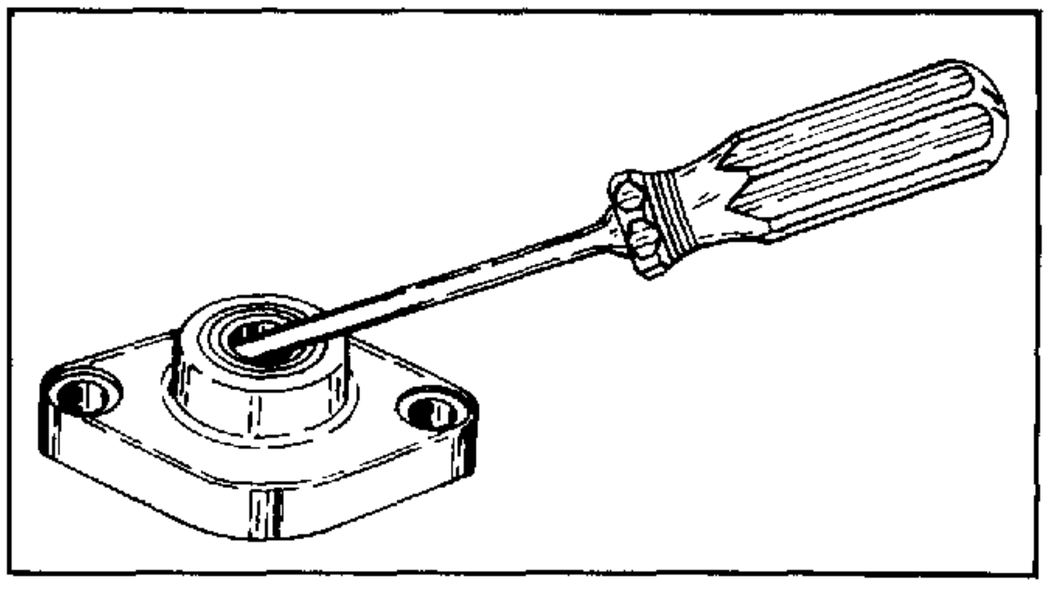

FIGURE 14.

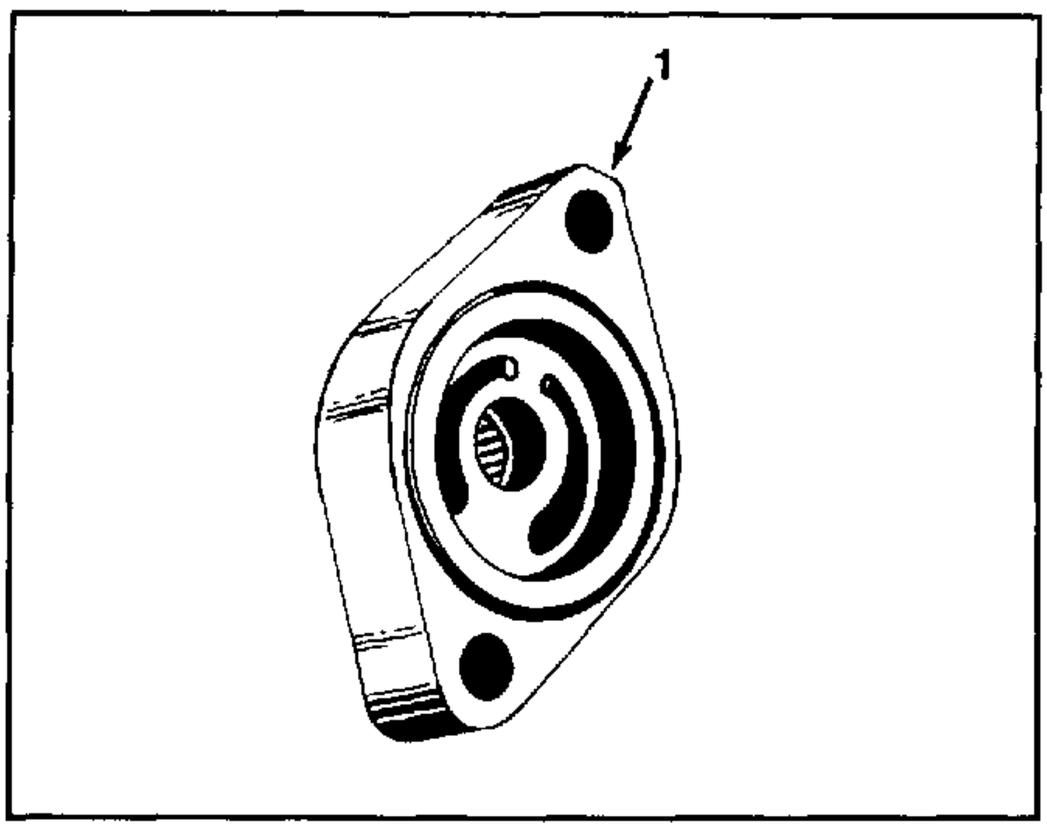

FIGURE 15.

1. Flat Side

All Models:

1. Thoroughly clean and deburr the outside of the transmission before attempting any disassembly. Remove paint from shaft surfaces.

IMPORTANT: Mark the charge pump housing before disassembly, as it is possible to install the pump incorrectly resulting in low charge pressure.

2. Remove the capscrews securing the charge pump housing to the center section housing. Carefully remove the pump housing. The rotor assembly may stick to the housing. Do not drop the assembly.
3. Remove the rotor and pin assembly (if it was not removed in step 2). Because of the polished surface, be sure to protect the assembly against nicks, scratches and rust.
4. Using a screwdriver, pry the lip seal out of the pump housing.
5. Check needle bearing and replace if necessary.

INSPECTION AND REPAIR

The rotor assembly is serviced as a unit. The charge pump housing, O-Ring, lip seal and rotor pin are all serviced separately.

Inspect all parts for excessive wear or damage, replace if necessary.

Use a new lip seal and O-Ring.

REASSEMBLY AND INSTALLATION

Reassembly and installation of the charge pump to the center section housing is the exact reverse of removal and disassembly with particular attention paid to the following:

1. Throughly lubricate all parts in clean Hy-Tran.
2. If removed, install the new needle bearing in the pump housing. Be sure the bearing is "bottomed" in the bore.
3. Install a new oil seal in the pump housing. Install a new O-Ring.
4. If the housing is new or unmarked, the flat side by the mounting bolt hole should face the right side of the machine.
5. Torque the pump housing capscrews evenly to 70 N•m (52 ft. lbs.). Rotate the pump shaft while tightening the capscrews. Loosen and retighten and capscrews evenly as necessary to relieve any binding of the shaft.
6. On Model 982 for ease of installation, connect the drive shaft to the transmission first, then align the shaft to the engine flywheel flange. Lubricate the splined transmission input and output shafts and couplings with IH 251 HEP grease.

TRANSMISSION

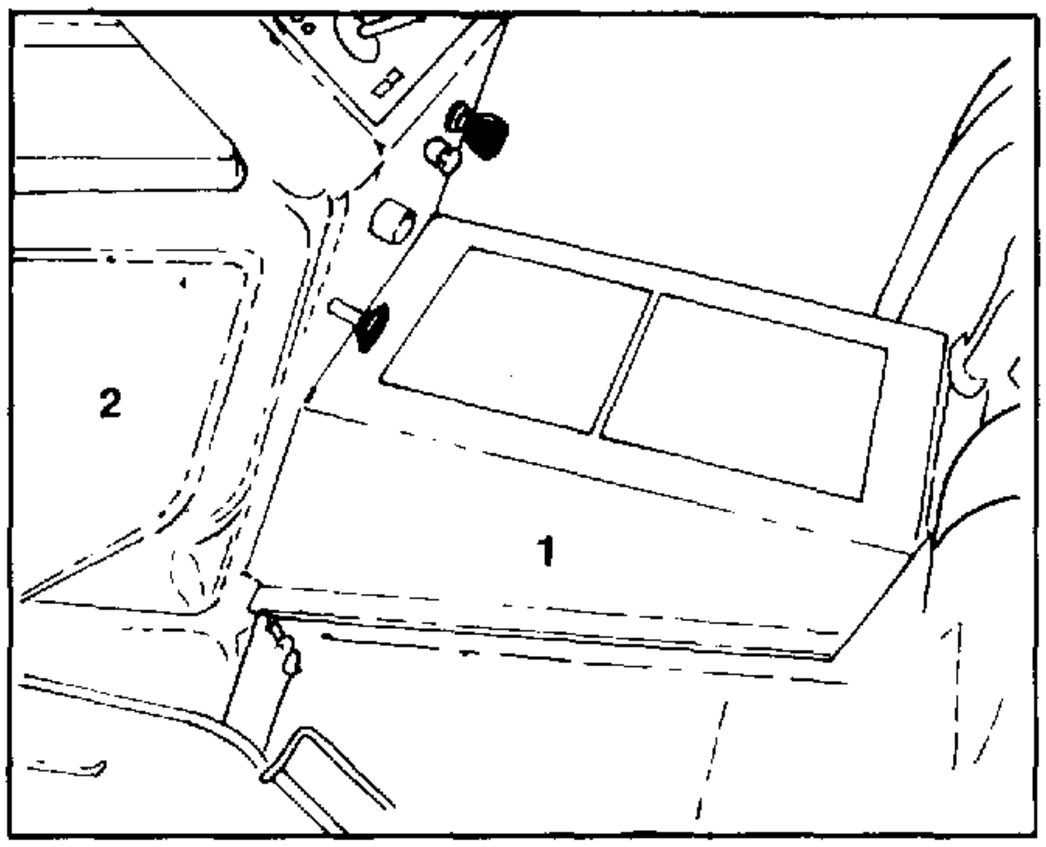

FIGURE 16.

REMOVAL
For Models 682 and 782:

1. Remove the frame cover and an engine side panel.

1. Frame Cover 2. Engine Side Panel

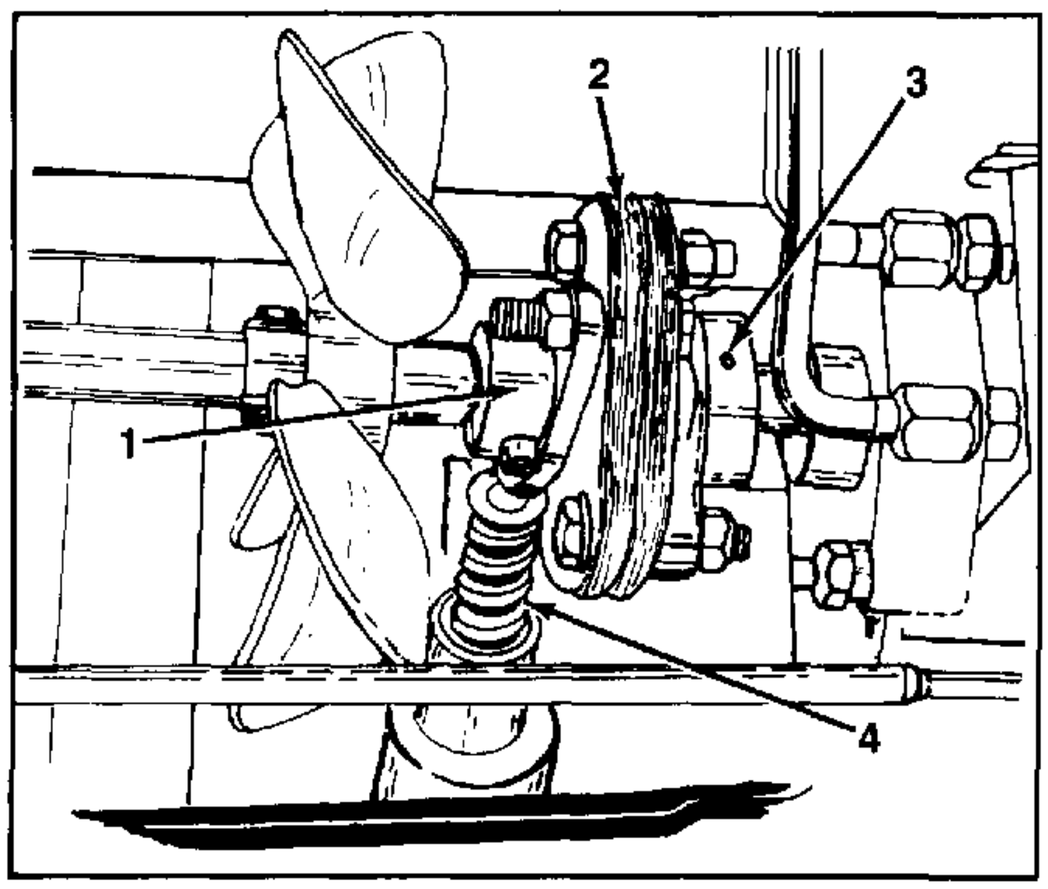

FIGURE 17.

2. Remove the hydraulic lines from the center section to the lift control valve, if so equipped.
3. Remove the bolts from the flex coupling
4. Support the drive shaft and drive out the drive shaft coupling roll pin. Slide the coupling forward on the shaft.
5. Drive out the coupling arm roll pin and slide it rearward on the transmission input shaft.

1. Drive Shaft Coupling 2. Flex Coupling 3. Coupling Arm 4. Hydraulic Jack

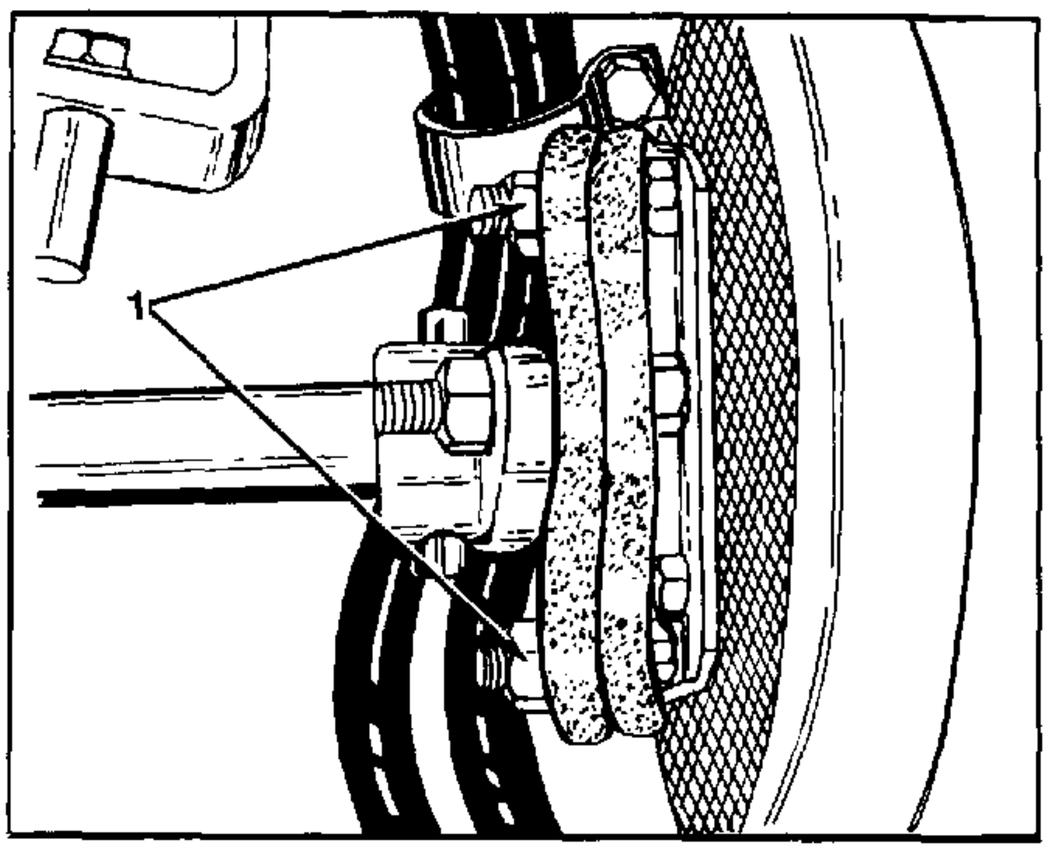

FIGURE 18.

6. Remove the nuts securing the front flex coupling to the flywheel flange and remove the drive shaft.

1. Flywheel Flange Nuts

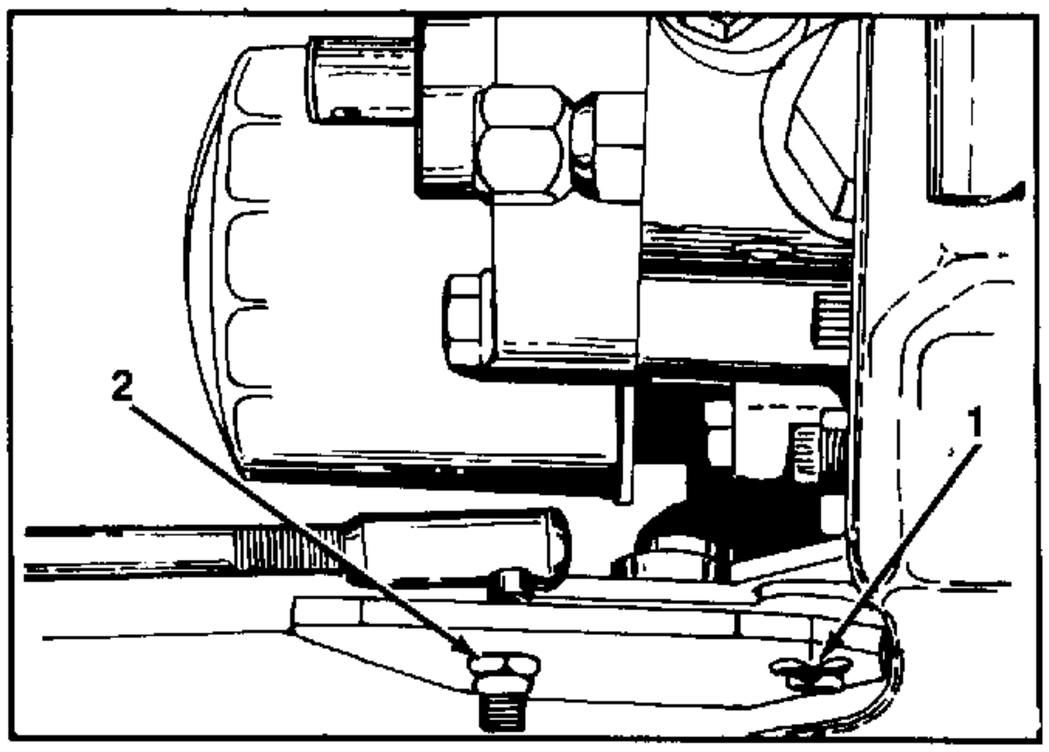

FIGURE 19.

1. Retaining Ring
2. Lock Nut

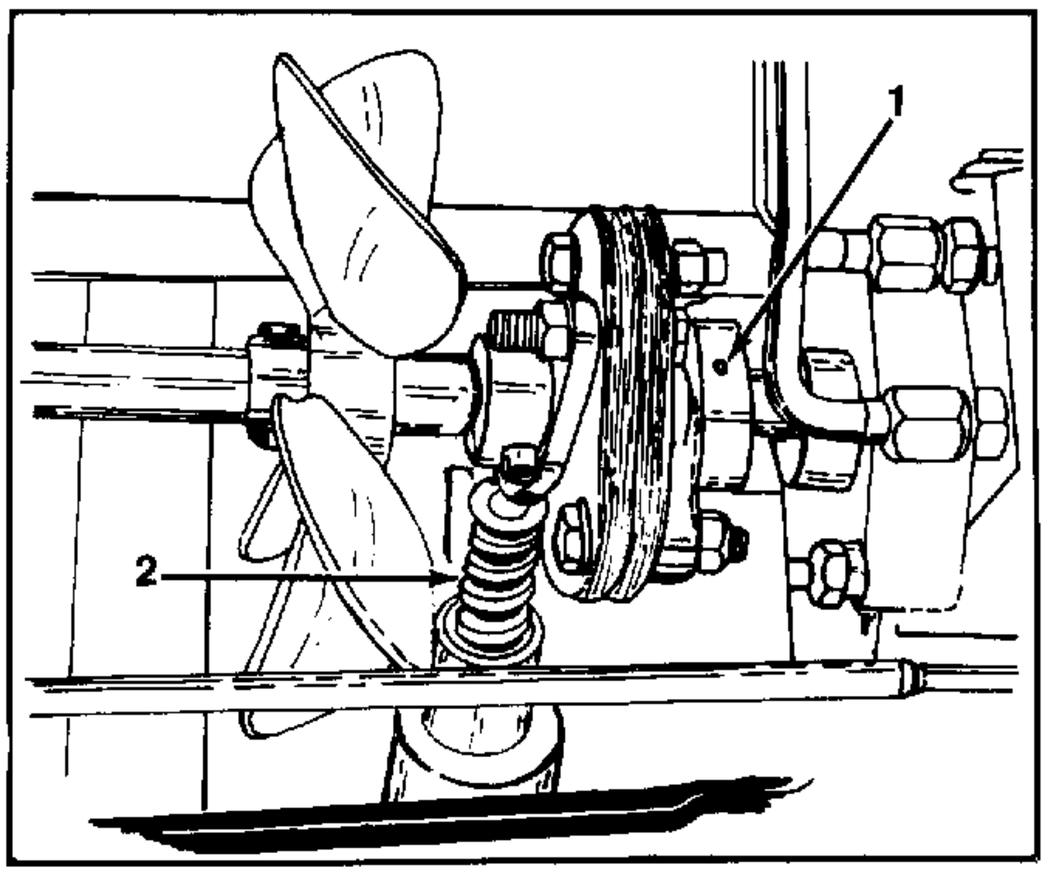

FIGURE 20.

1. Locating Pin
2. Hydraulic Jack

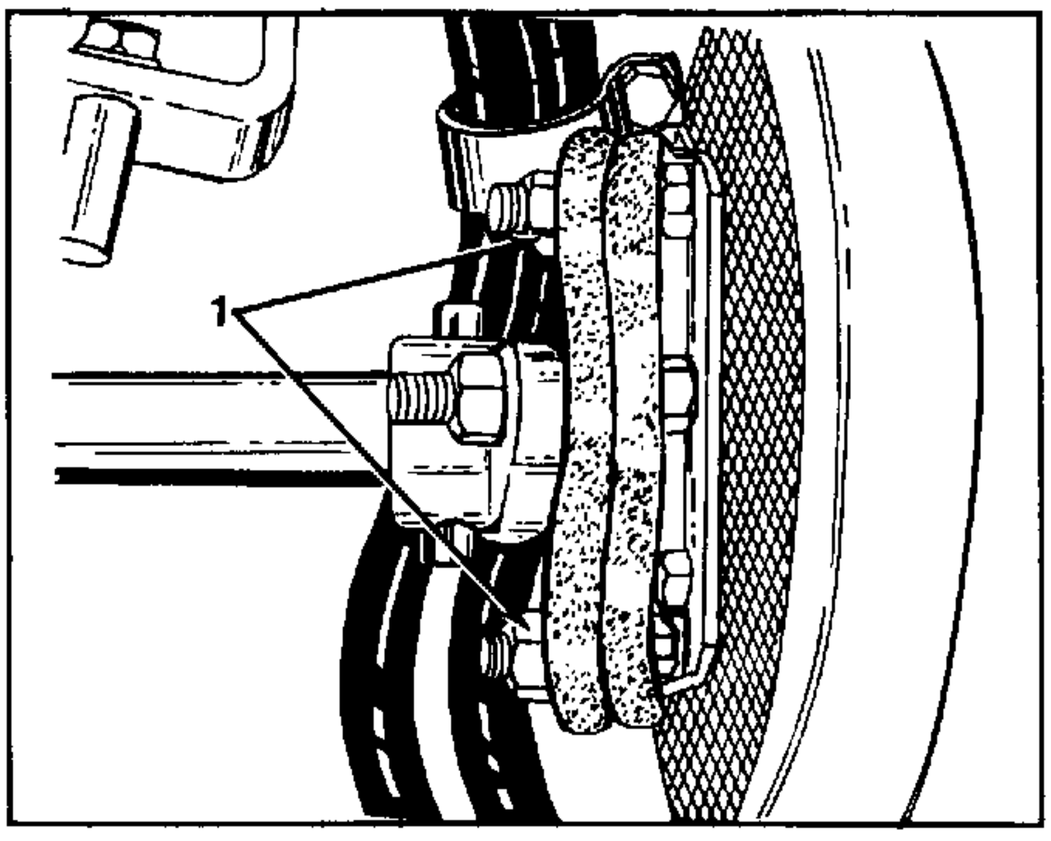

FIGURE 21.

1. Flywheel Flange Nuts

7. Remove the retaining ring which secures the control cam assembly to the damper spring plate assembly.
8. Disconnect the connecting stud ball joint from the control cam assembly by removing the lock nut.
9. Remove the cam bracket mounting bolts and move the bracket and linkage up and out of the way.
10. Disconnect the brake rod from the brake lever.
11. Remove the brake adjusting screw.
12. Place a pan under the hydrostatic unit and disconnect the suction line from the unit. Cap the fitting and rotate the suction line away from the hydrostatic unit.
13. Remove the hydrostatic mounting bolts from the rear frame housing. Bring the unit forward tilting the top of the unit downward and bring it up and out.

For Model 982:

To remove the hydrostatic transmission, removal of the drive shaft is necessary. For Model 982 the engine must be moved forward for drive shaft removal. Use the following procedure.

1. Raise the hood and remove the engine side panels. Remove the frame cover.
2. Disconnect the headlight wiring and remove the hood and grille as an assembly.
3. Remove the hydaulic lines from the center section to the lift control valve.
4. Remove the oil filter, support the drive shaft and drive out the coupling arm locating pin.
5. Remove the engine mounting bolts and slide the engine forward until the coupling arm is clear of the transmission input shaft.
6. Remove the nuts securing the front flex coupling to the flywheel flange and remove the drive shaft.
7. Remove the cam bracket mounting bolts and move the bracket and linkage up out of the way.
8. Remove the brake rod and return spring.
9. Place a pan under the hydrostatic unit and disconnect the suction line from the unit. Rotate the suction line away from the hydrostatic unit.
10. Remove the hydrostatic mounting bolts from the rear frame housing. Bring the unit forward, up and out.

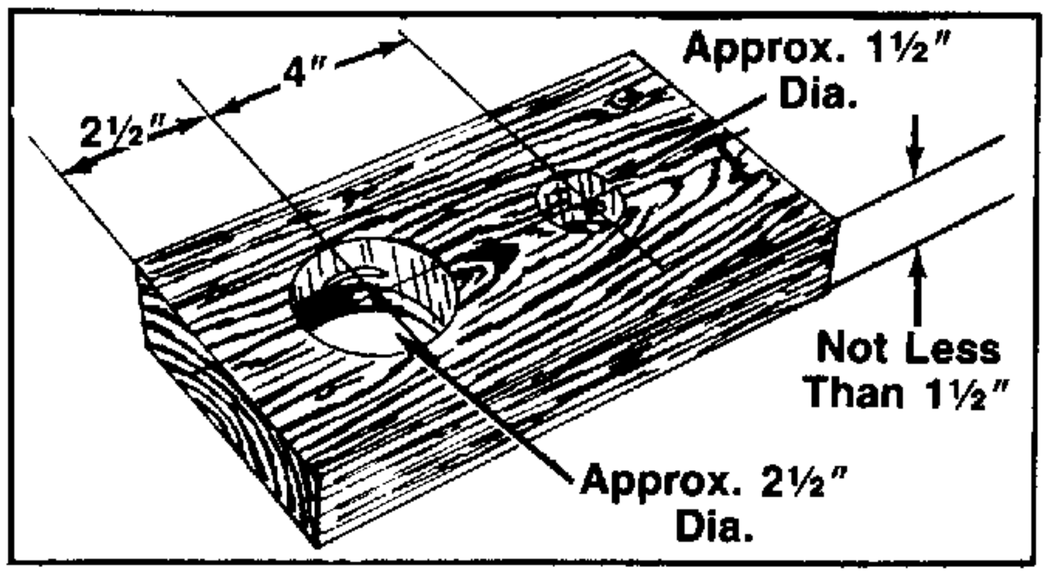

FIGURE 22.

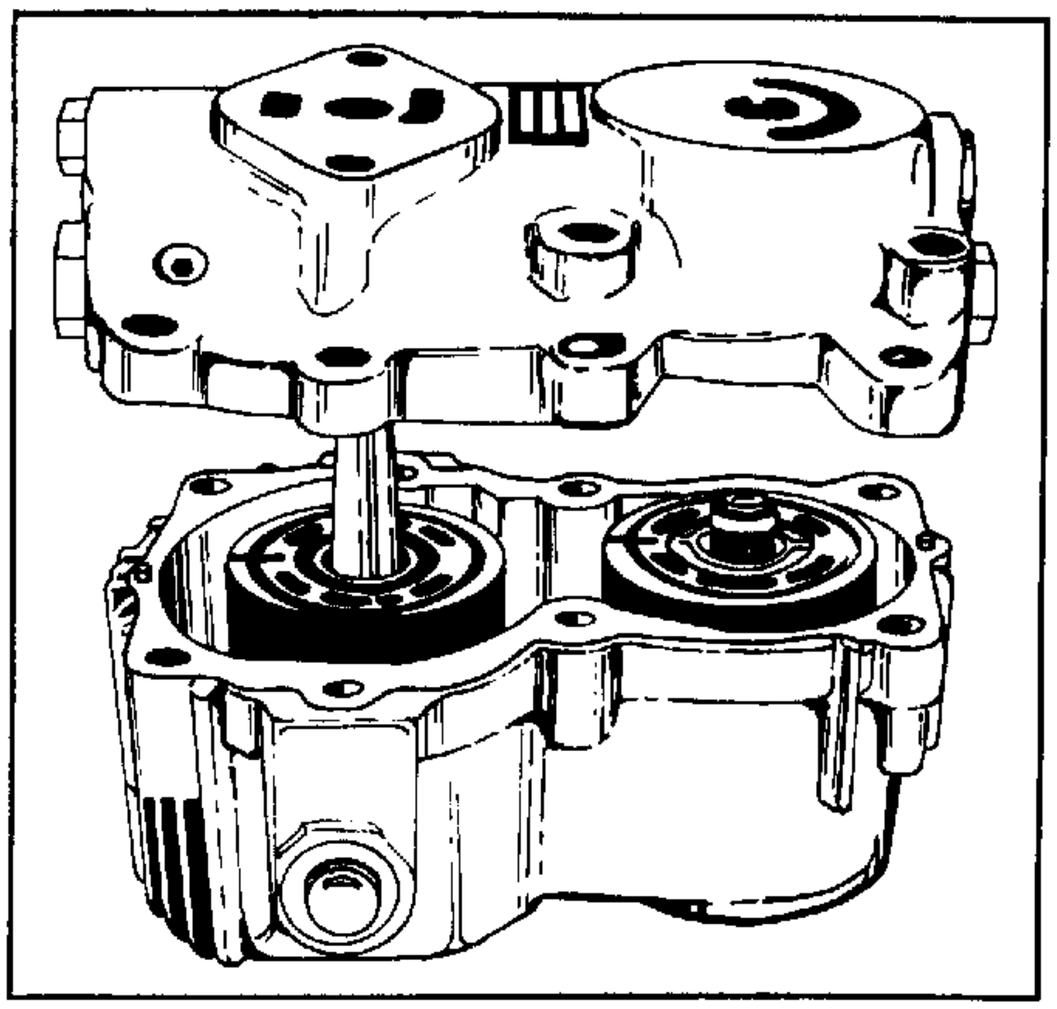

FIGURE 23.

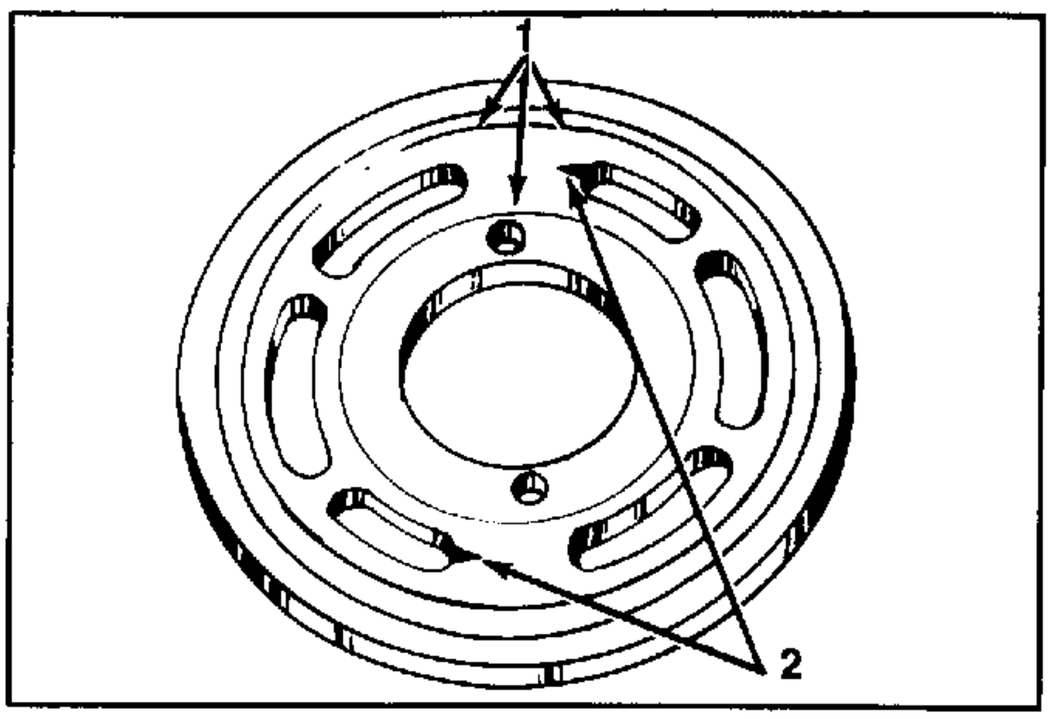

FIGURE 24.

1. Check These Areas For Wear
2. Pump Valve Plate (Two Notches)

DISASSEMBLY
All Models:

A holding fixture made of wood is necessary to conveniently service this unit.

1. Be sure the outside surfaces of the transmission have been thoroughly cleaned. Place the transmission assembly in the holding fixture.

IMPORTANT: Mark the charge pump housing before disassembly, as it is possible to install the pump incorrectly resulting in low charge pump pressure.

2. Remove the charge pump. Remove the capscrews securing the center section housing to the transmission housing.
3. Lift the center section housing from the transmission housing.

IMPORTANT: The valve plates may stick to the center section housing surface. Be extremely careful not to drop them.

4. Remove the pump and motor valve plates (if not removed in step 3) noting the location of each plate. The valve plate with two notches is used on the pump assembly and the plate with four notches on the motor assembly. Remove the valve plate pins.

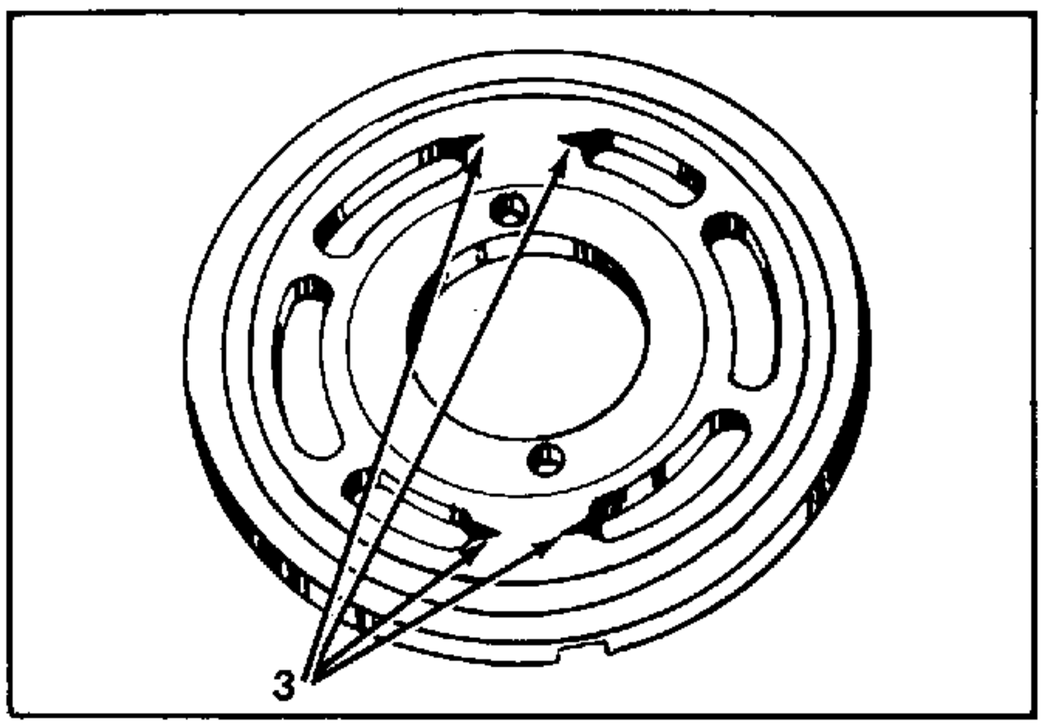

FIGURE 25.

3. Motor Valve Plate (Four Notches)

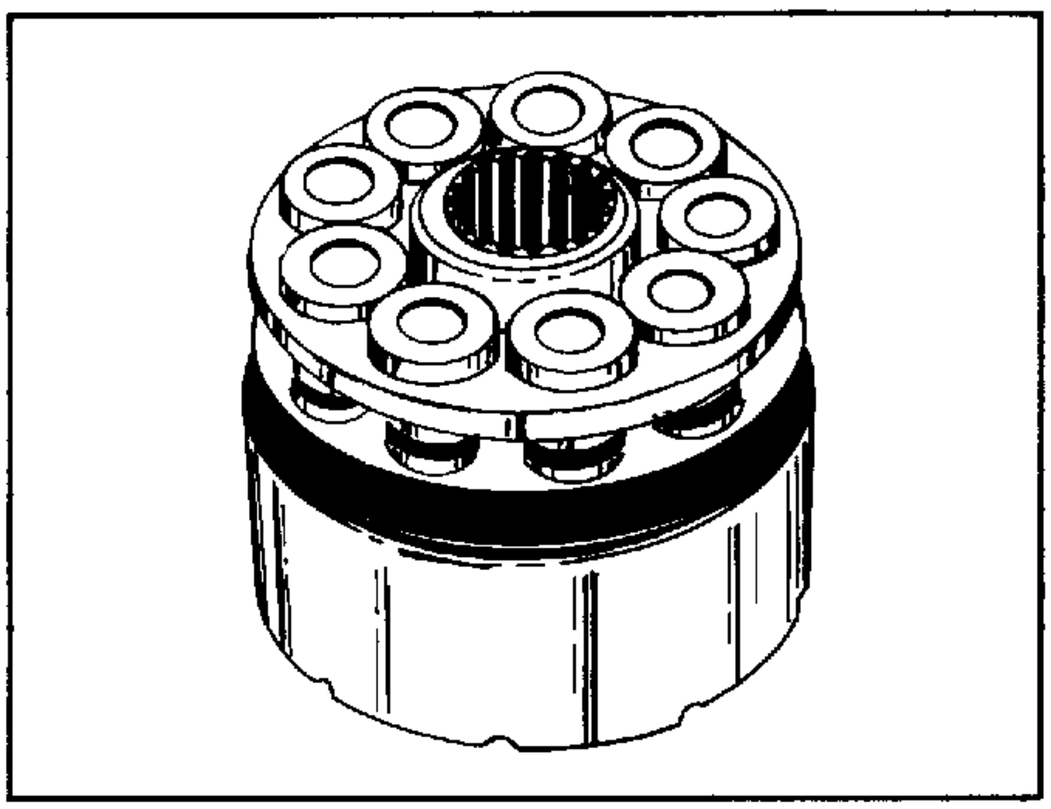

FIGURE 26.

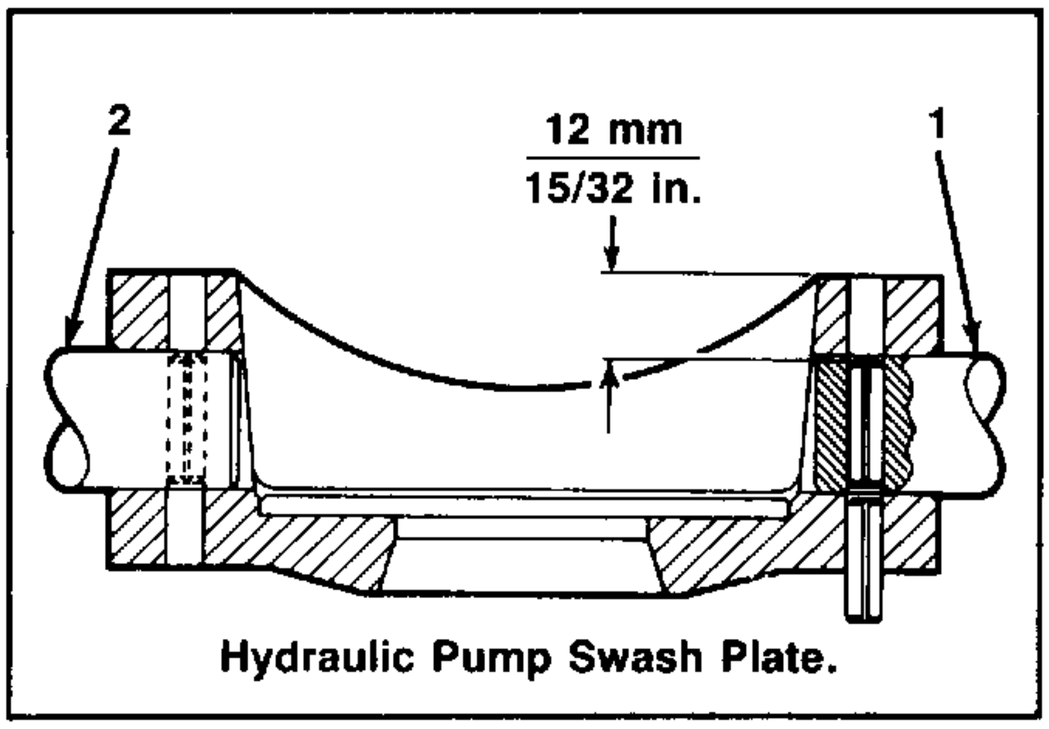

FIGURE 27.

1. Control Shaft
2. Trunnion Shaft

5. Tip the transmission housing so that the pump and motor cylinder block assemblies can be removed. Grasp the assemblies so that the pistons will not fall out and be damaged.

6. Remove the trunnion shafts from the hydrostatic pump swash plate as follows:

NOTE: Two spring pins are used on the control shaft and one pin is used on the opposite trunnion.

a. Mark or tape a punch exactly 11.9 mm (15/32 inch) from the end.

b. Drive on the spring pins **very carefully** until the mark on the punch is even with the top surface of the swash plate, a distance of 11.9 mm (15/32 inch). At this point the spring pins should be centered in the trunnion shafts and the shafts are free of the swash plate.

IMPORTANT: Be extremely careful not to drive the top control shaft pin or the trunnion shaft pin through the shaft and into the hole in the bottom of the swash plate as removal is then very difficult. Also if the pins are driven too far, it is possible to drive the pins through the hydrostatic unit housing.

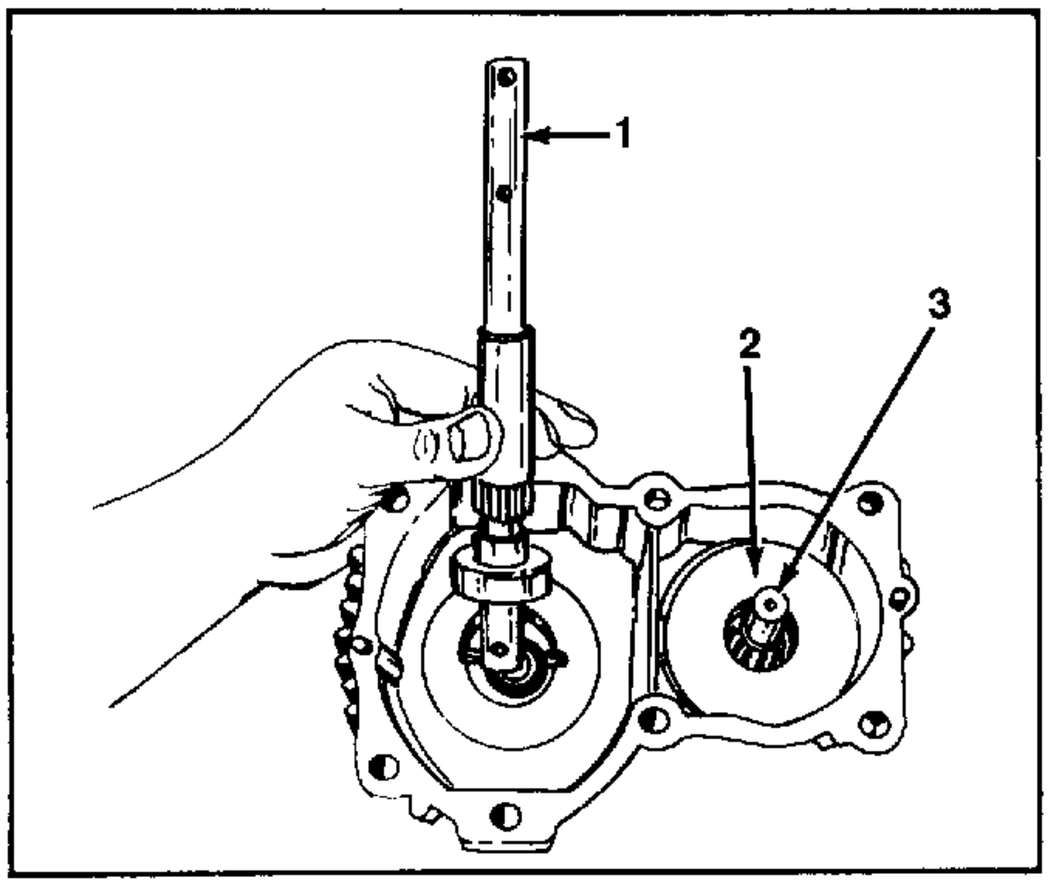

FIGURE 28.

c. Remove the trunnion shafts and swash plate from the transmission case. After the swash plate has been removed, drive out the pin remaining in the lower half of the swash plate.

7. Remove the pump shaft assembly.

1. Pump Shaft Assembly
2. Motor Swash Plate
3. Motor Shaft Assembly

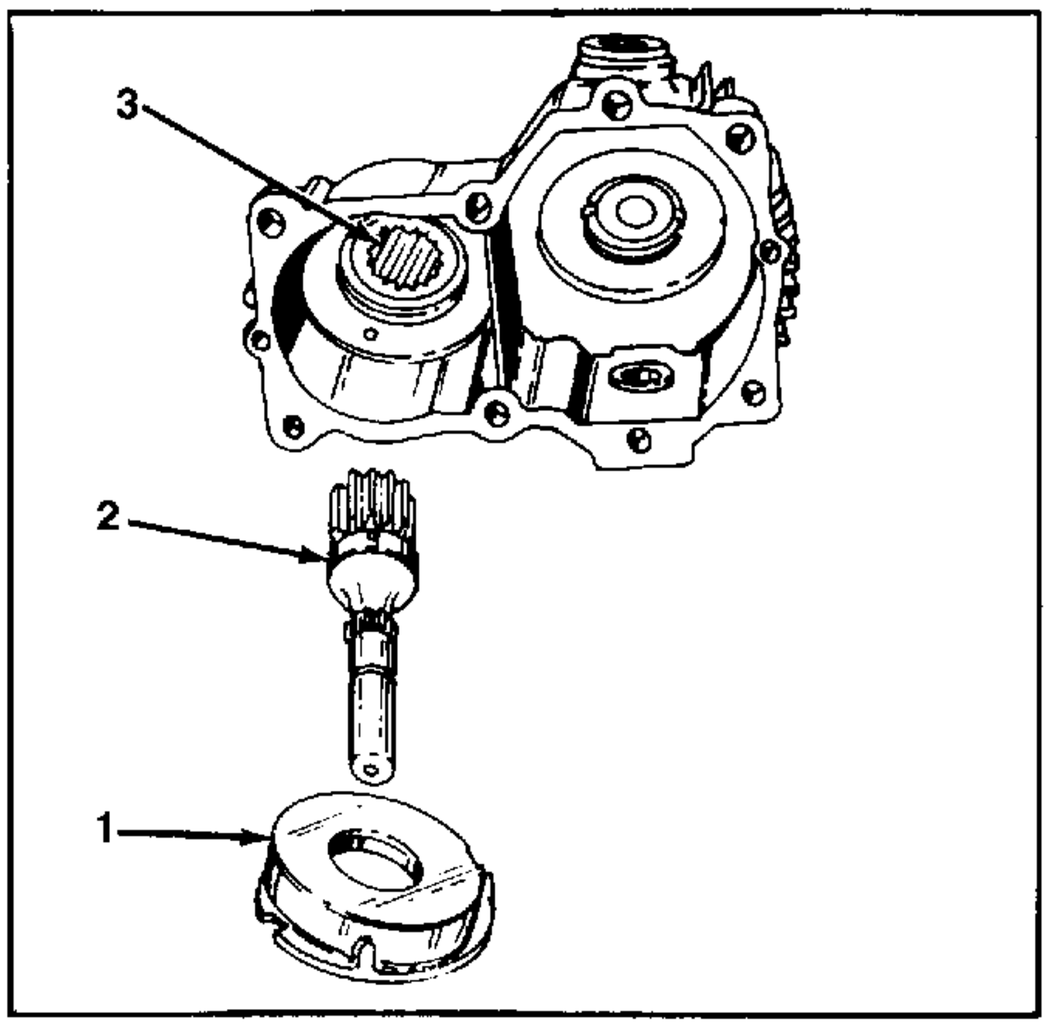

FIGURE 29.

8. Remove the capscrews securing the motor swash plate.
9. Remove motor shaft and swash plate from the housing.

1. Motor Swash Plate
2. Motor Shaft
3. Roller Bearing

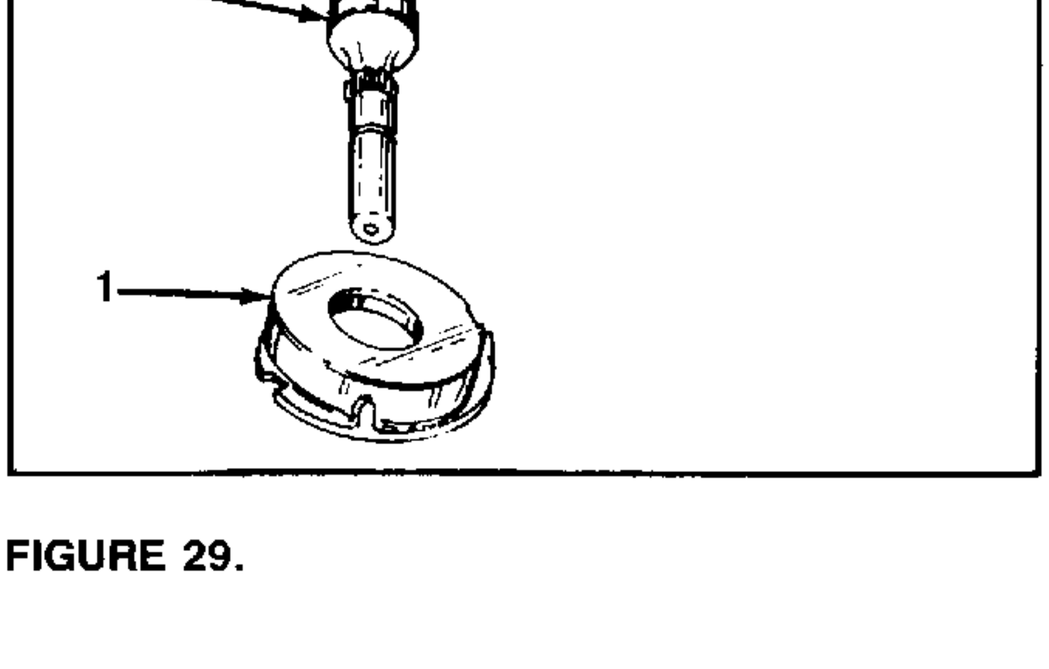

FIGURE 30.

INSPECTION AND REPAIR

1. Remove the slipper retainer and pistons.

1. Pistons
2. Slipper Retainer

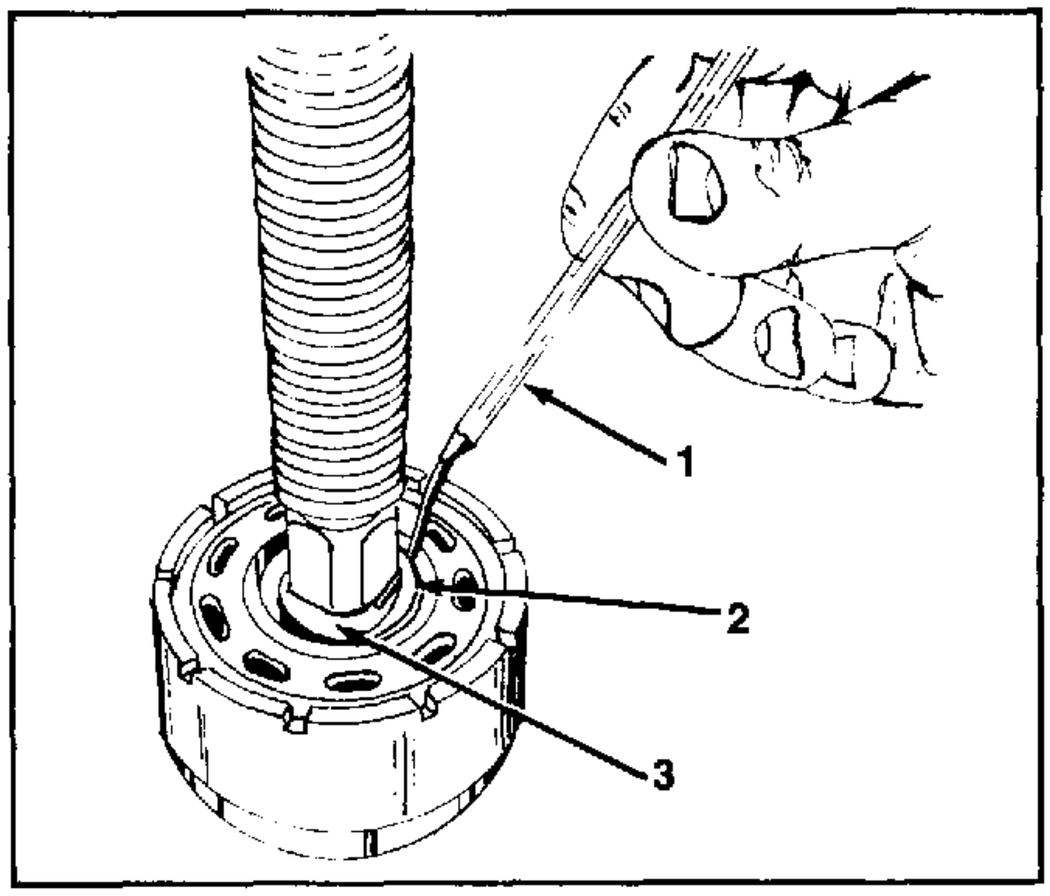

FIGURE 31.

2. Place the cylinder block assembly in a press on wood blocks.
3. Using a step plate, press on the spring retainer compressing the cylinder block spring. Remove the retainer ring.

1. 14-57-3 O-Ring Pick
2. Retainer Ring
3. Step Plate

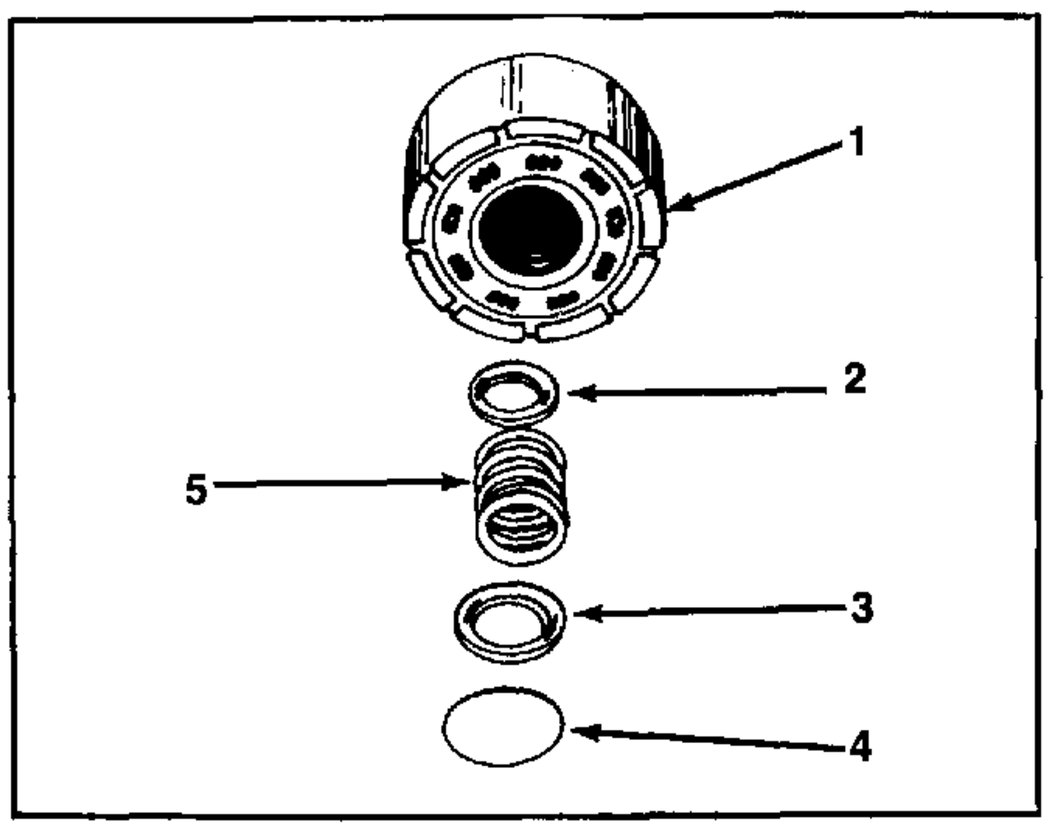

FIGURE 32.

1. Cylinder Block
2. Spring Washer
3. Spring Retainer
4. Retainer Ring
5. Spring

4. Carefully release the press. Remove the spring retainer, spring and spring washer. Remove the cylinder block from the press.
5. Thoroughly clean all parts and blow dry with compressed air.
6. Check the spring against specifications.
7. Check the cylinder block valve face for damage and the piston bores for excessive wear. Any linear scratches along the length of the bore will reduce efficiency. Check piston fit in the bores.
8. Install the spring washer (bevel side in), spring and spring retainer. Place the assembly in a press.
9. Compress the spring, using a step plate. Install the retaining ring.
10. Release the press and wrap the assembly in clean paper or lint-free cloth before setting aside.
11. Remove the pistons from the slipper retainer. Thoroughly clean the pistons and blow dry with compressed air. Be certain oil passage is open.
12. Carefully inspect each piston for scoring, wear or scratches.
13. Check the slippers for severe scratches or embedded material. Slippers may be lapped, but do not remove more than .127 mm (.005 inch). All slippers must be within .05 mm (.002 inch) thickness of each other.
14. If cylinder bores or pistons are badly worn or scored, a block assembly with pistons is available for replacement. Pistons or block are not serviced as individual parts.

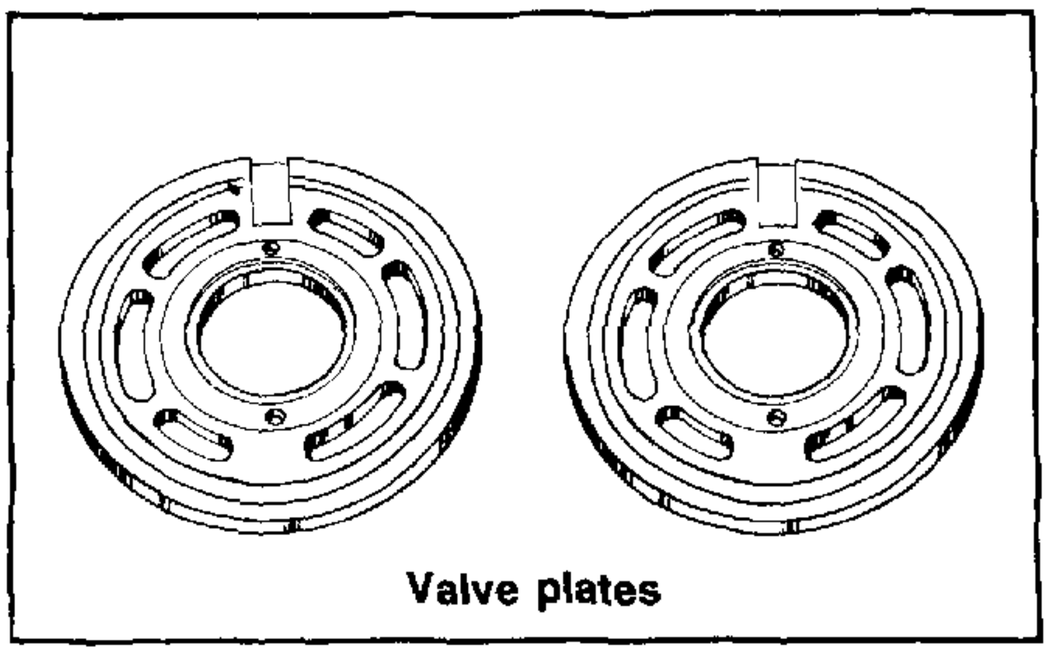

FIGURE 33.

15. Wrap the pistons in clean paper or lint-free cloth or reinstall in the cylinder block and wrap the assembly.
16. Thoroughly clean the valve plate and blow dry with compressed air.
17. Inspect the valve plate for scratches, excessive wear or erosion. A worn or scored valve plate reduces pump efficiency.

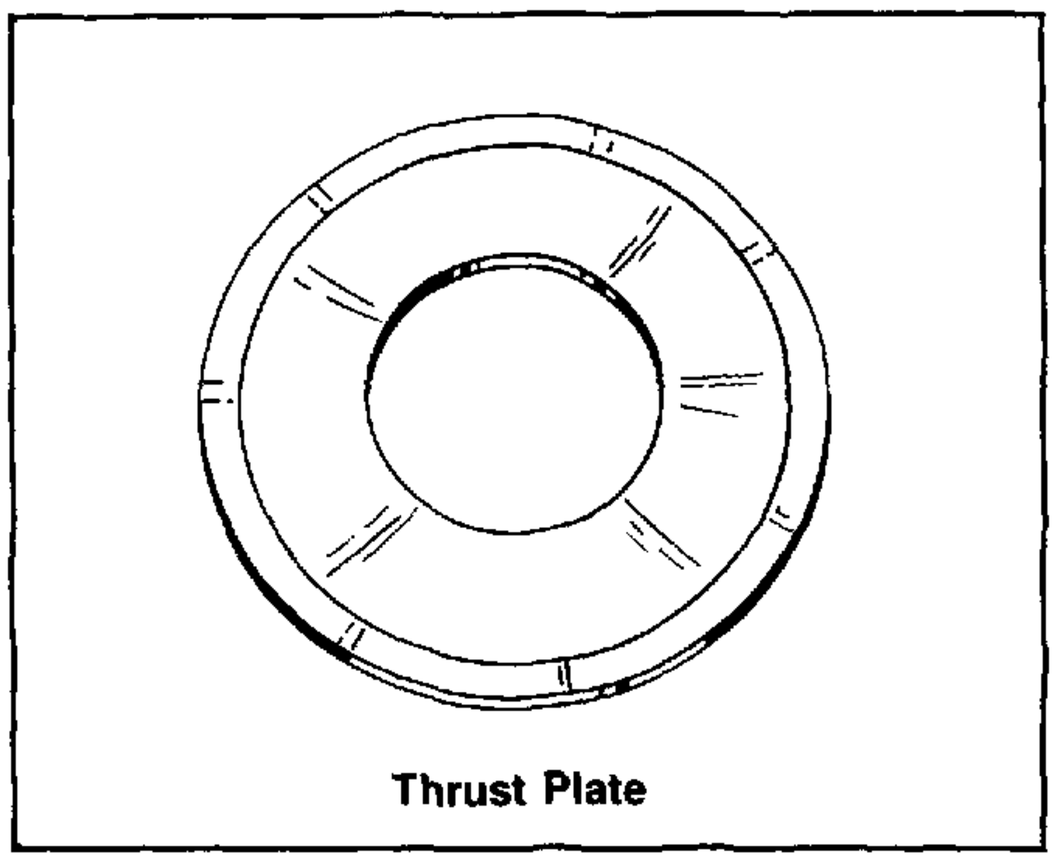

FIGURE 34.

NOTE: To check the plate for wear, run your finger nail or a sharp pencil across the face of the plate. If wear is felt, replace the plate.

18. Inspect the pin slot and grooves of the valve plate. Clean out any foreign matter and deburr the surface as necessary.
19. Inspect the slipper retainer for damage. A slight wear pattern where the slippers ride is normal. Replace if wear is excessive.
20. Inspect the thrust plate (for the hydraulic pump swash plate) for wear, embedded material, or scoring.
21. Inspect all the bearings and replace as necessary.

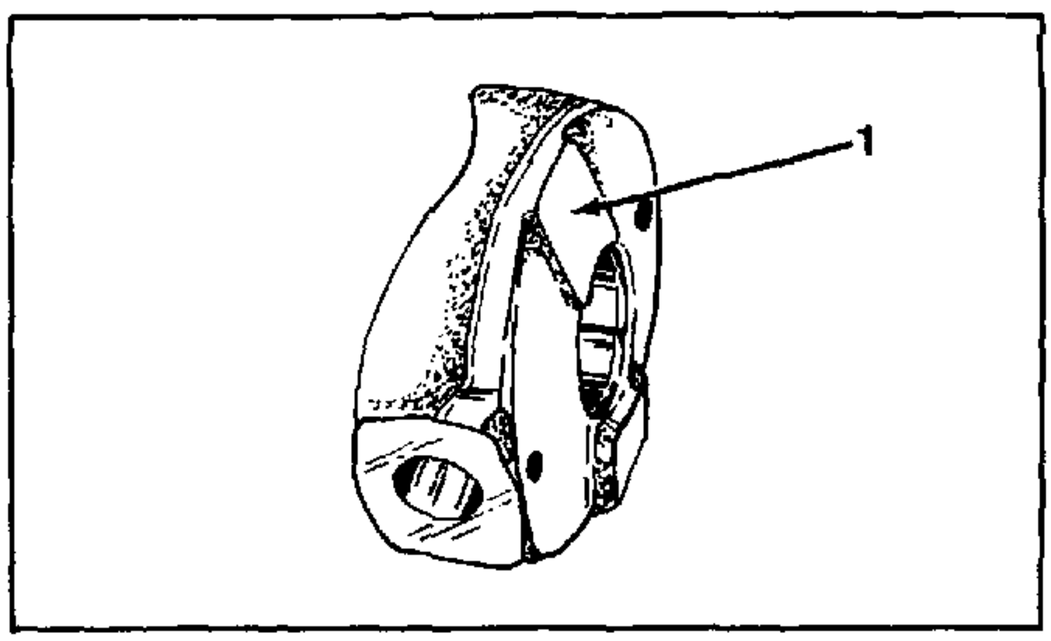

FIGURE 35.

1. Thin Pad

REASSEMBLY

Reassembly is the reverse of disassembly, however, particular attention should be given to the following:

1. Thoroughly lubricate all parts with Hy-Tran.
2. Be sure to install the pump swash plate with the thin pad toward the top of the transmission housing.
3. Use all new O-Rings, seals and gaskets.

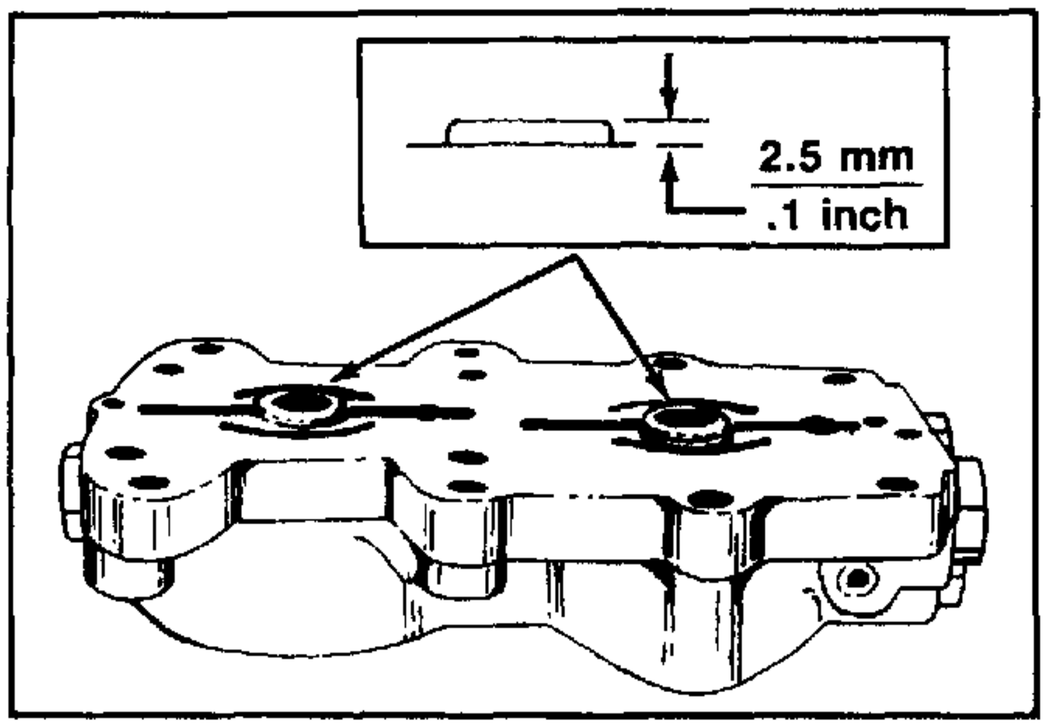

FIGURE 36.

4. The valve plate with two notches is used in the pump and the plate with four notches is used in the motor.
5. The thickness of the piston slippers in the block assembly must not vary more than .05 mm (.002 inch) of each other.
6. If new center section needle bearings are installed, they must extend 2.5 mm (.1 inch) above the machined surface of the center section.
7. Install a new oil filter.

INSTALLATION

IMPORTANT: Prior to installing the hydrostatic unit onto the differential case, squirt Hy-Tran into the suction line fitting. Turn the unit upside down to allow the oil to flow into the passages. Rotate the pump input shaft and motor output shaft to insure free rotation.

1. Install the hydrostatic unit on the rear frame housing with all the bolts except the ones which hold the cam bracket. Torque the bolts to 41 N•m (30 ft. lbs.).
2. For Models 682 and 782, connect the brake rod to the brake lever and install the brake adjusting screw. Refer to Internal Brakes—Hydrostatic Transmission—Adjustment for brake adjustment procedures.
3. Connect the control cam assembly to the connecting stud ball joint.
4. Secure the control cam assembly to the damper spring plate assembly with the retaining ring.
5. Install the cam bracket, but do not tighten the bolts as the bracket must be adjusted.
6. Install the drive shaft and roll pins. Support the drive shaft when installing the roll pins.

On Model 982 for ease of installation, connect the drive shaft to the transmission first, then align the shaft to the engine flywheel flange. Lubricate the splined transmission input and output shafts and couplings with IH 251 HEP grease.

7. Install the hydraulic lines to the control valve.
8. Fill the rear frame to the proper level with Hy-Tran.
9. Adjust the cam bracket. Refer to Cam Bracket Adjustment.

DISCONNECT CLUTCH KITS

NOTE:

These kits should be installed by your authorized Cub Cade dealer only.

Kit Number	For Models:
190-427-100	680; 1210/620; 1210 630; 1211
190-428-100	682; 1710, 1810 782; 1711, 1811 784; 1712, 1812 650; 1810 660; 1811 670; 1812
190-429-100	882; 1512/882; 782 D
190-430-100	982; 1912, 984 986; 1914/731; 2072 (ONAN)
190-431-100	720; 1872/730; 2072 (KOHLER)

LIST OF PARTS IN KIT

Item	Description	Qty.
A	Fan	1
B	Fan Mounting Ring	1
C	Hex Patch Nut 1/4-20 Thd.	8
D	Fl-Washer .385 I.D. x .87 O.D. x .06 Thk.	2
E	Hex Top Lock Nut 3/8-24, Gr. 5	2
F	Clutch Assembly	1
G	(For Kits—427, 428 & 429) Roll Pin 1/4 x 1-3/8" Lg.	2
G	(For Kits—430 & 431) Roll Pin 3/8 x 1-3/4" Lg.	1
	Roll Pin #3 1/8 x 1-1/4" Lg.	1
H	Hex Bolt ¼-20 x ½" Lg.	2
J	Roll Pin ¼" x 2¼" Lg.	1

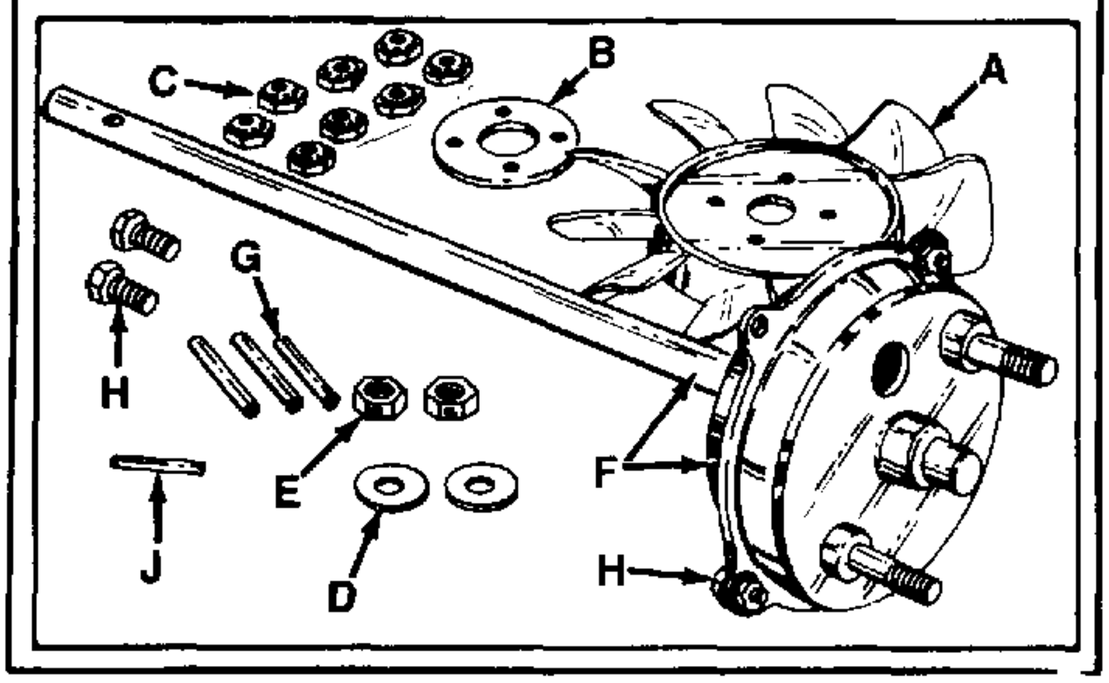

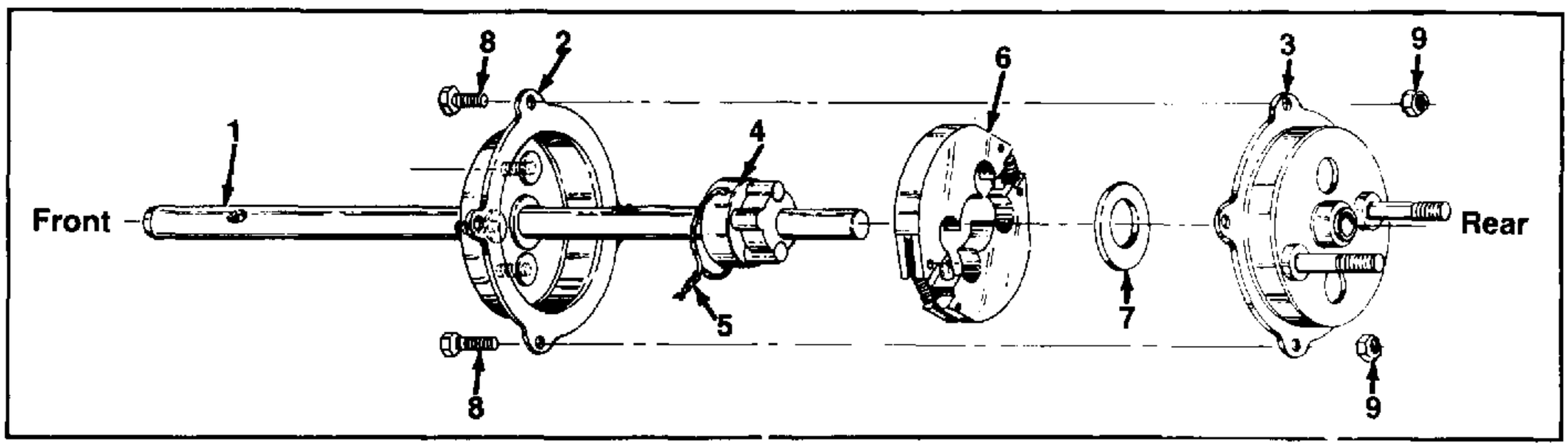

CLUTCH BREAKDOWN WIRED FOR ASSEMBLY

1. Drive Shaft
2. Front Clutch Cover
3. Rear Clutch Cover
4. Clutch Hub
5. Wire
6. Clutch Shoe Assembly
7. Washer
8. Hex Bolt ¼-20 x ½" Lg. (2)
9. Hex Nut ¼-20 Thd. (2)

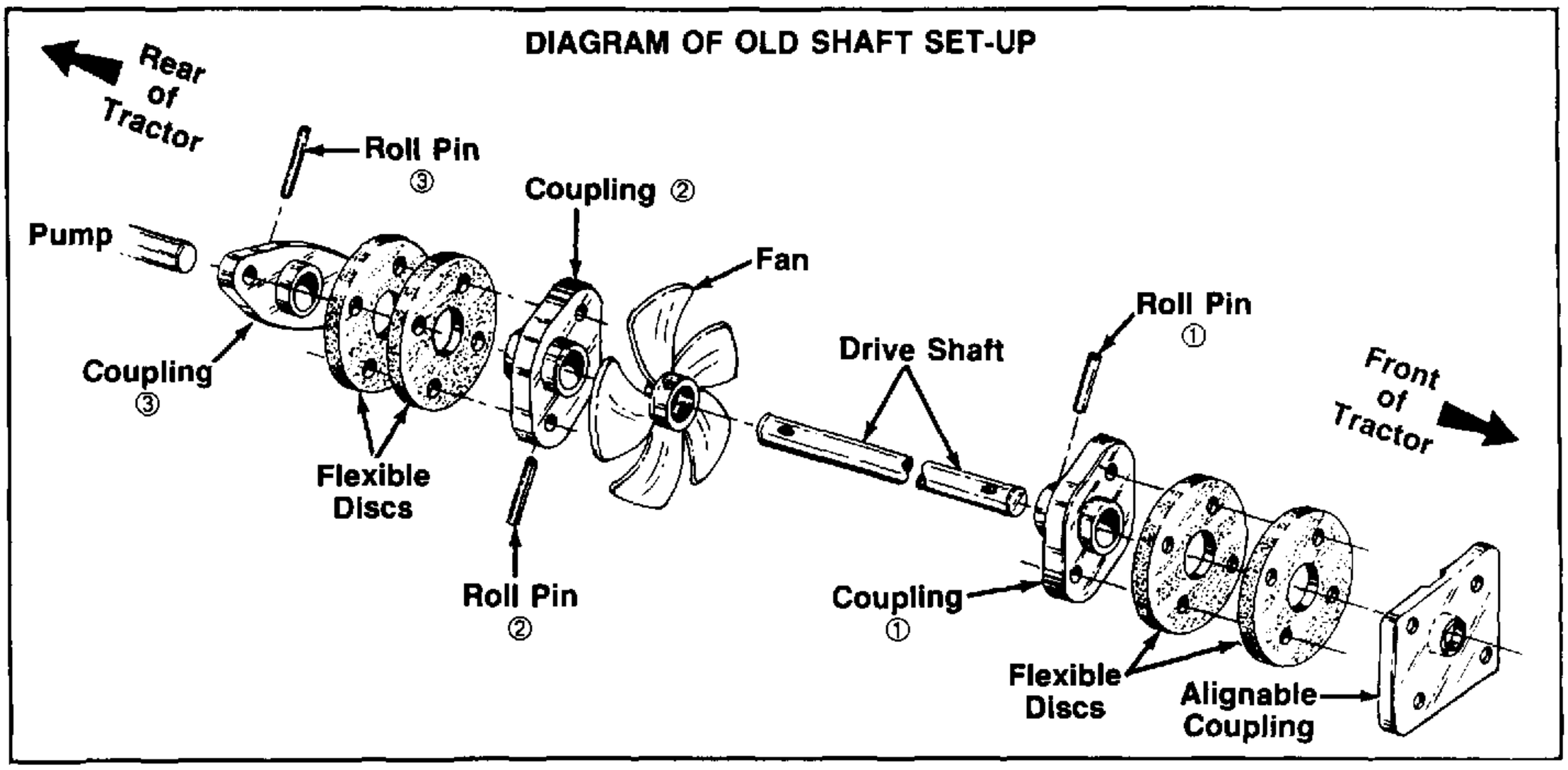

FIGURE 1.

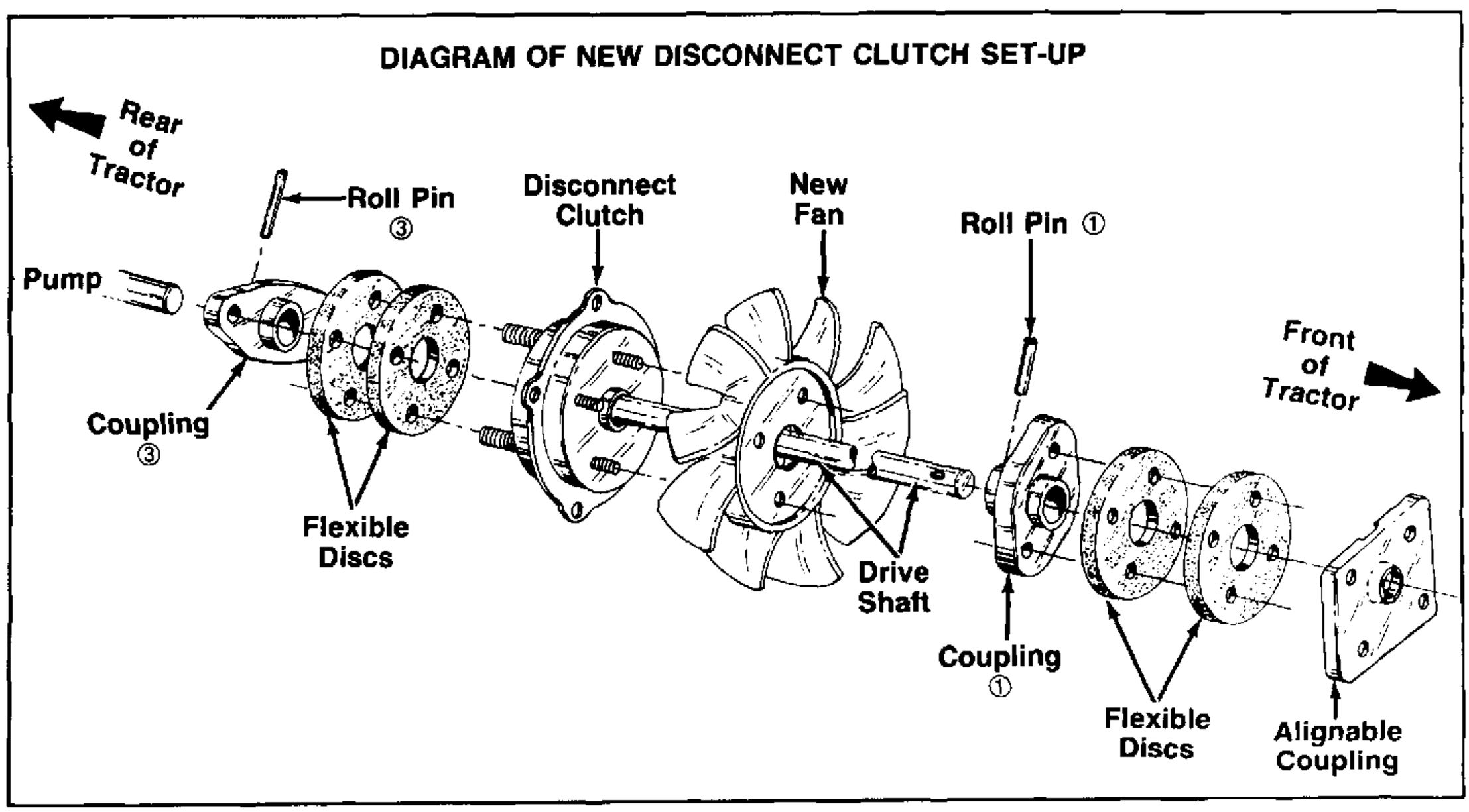

FIGURE 2.

NOTE

Tractors equipped with hydraulic lift units, be sure the lift is in the lowest position. See figure 3, before removing the drive shaft.

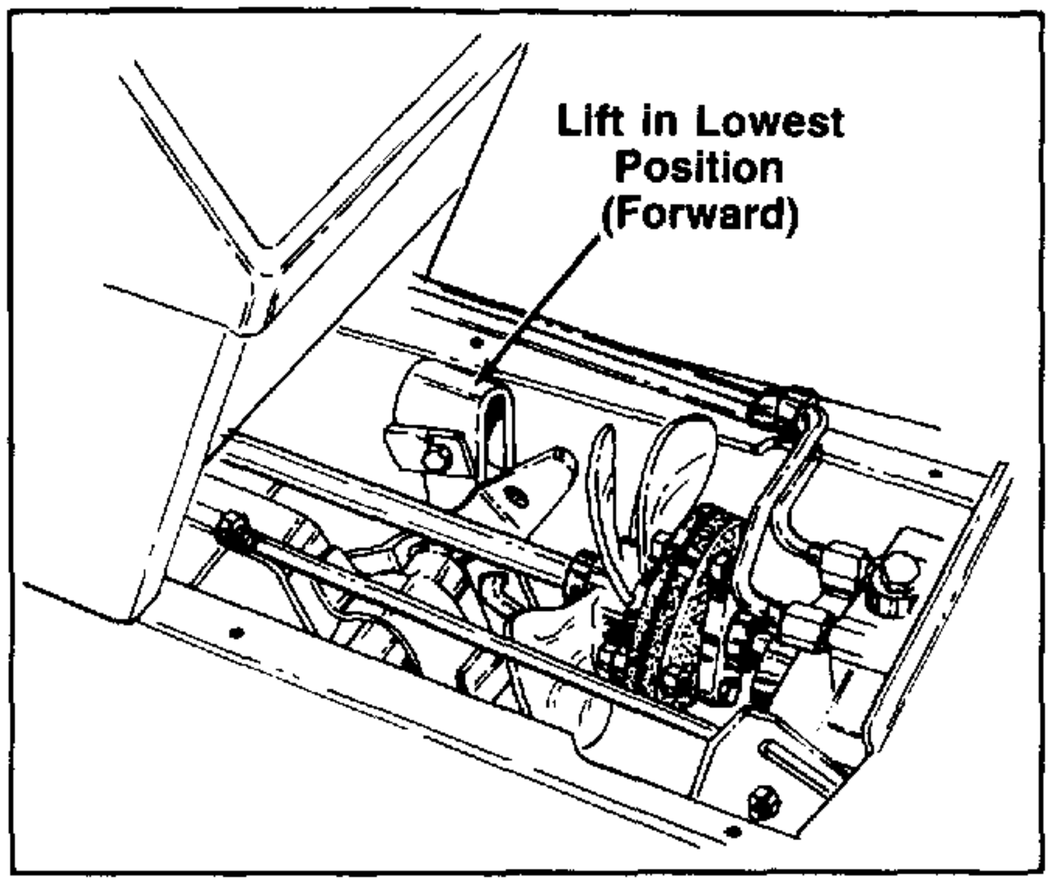

1. Remove the transmission cover, by removing four screws.
2. Remove the two side panels by removing two wing nuts and flat washers from each side and disconnect spring that attaches both panels together.
3. Remove the drive shaft, by removing the bolt, lock washer and hex nut holding the fan to shaft. See figure 4.

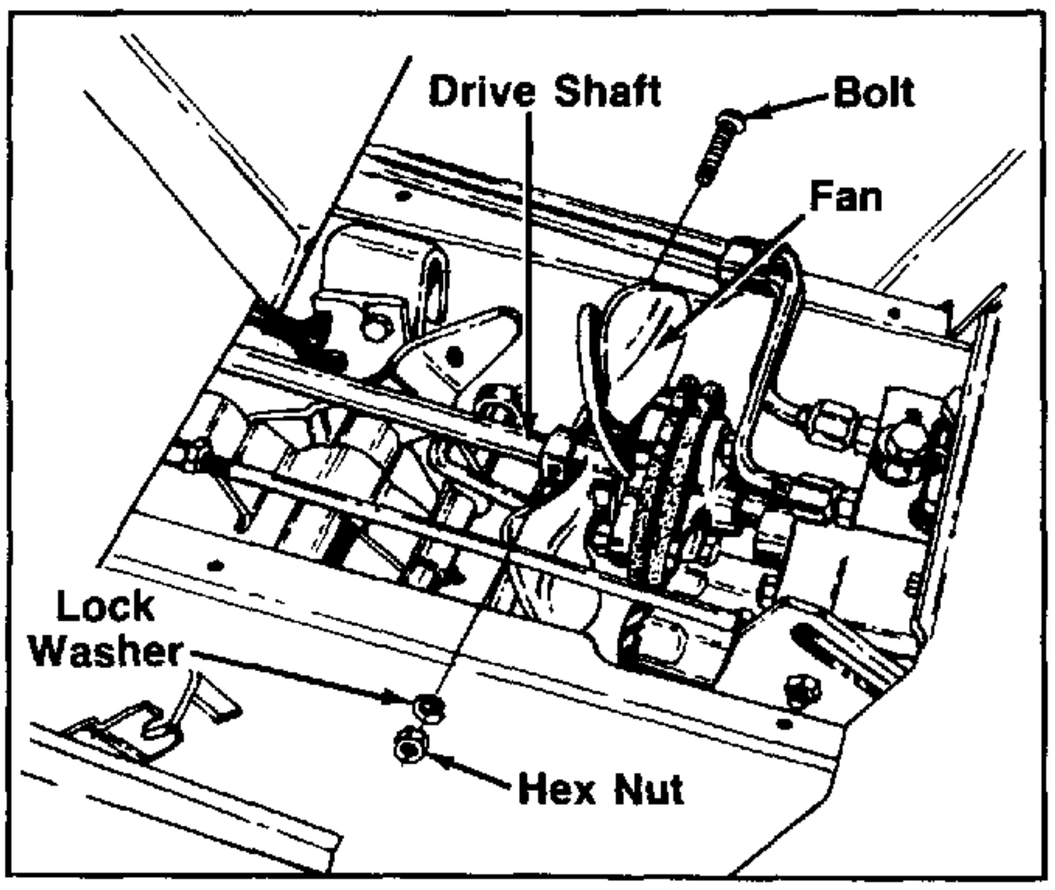

FIGURE 4.

4. Remove the front roll pin from shaft through coupling ① . See figure 5. The use of a drift pin or punch will be required. Discard roll pin and fan mounting hardware.

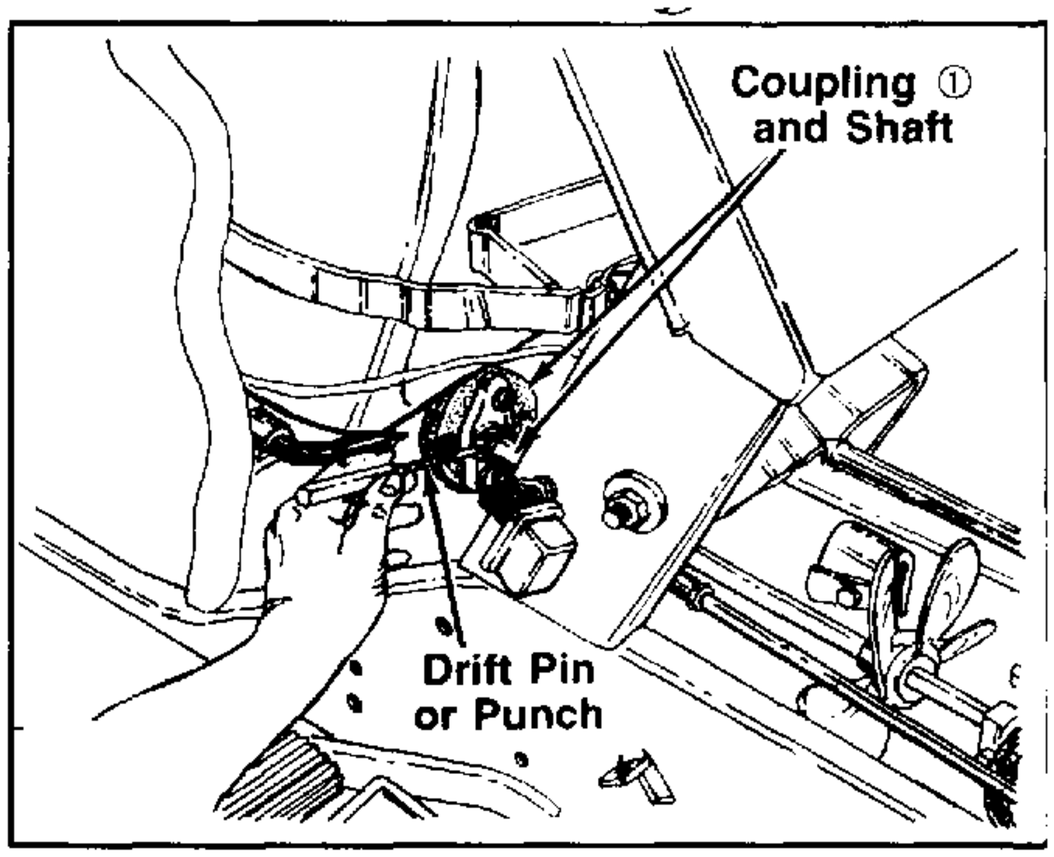

FIGURE 5.

5. Slide the fan all the way forward, out of the way. See figure 6.
6. Remove roll pins from couplings ② and ③. See figure 6.
7. Slide couplings ② and ③ along with flexible discs as far forward on shaft as possible.
8. Remove the shaft, coupling assembly and fan from the tractor, by pushing the shaft forward enough to clear the hydro pump. See figure 6.

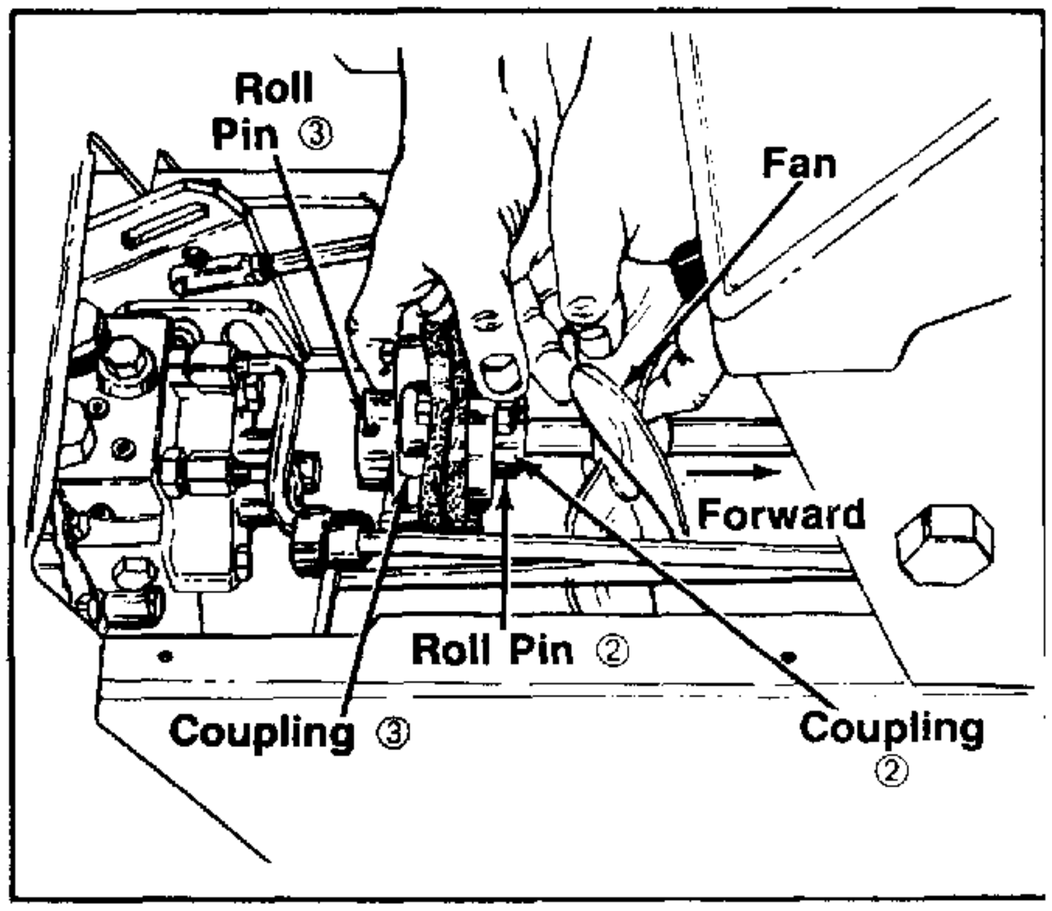

FIGURE 6.

9. Remove coupling ②, by removing two bolts and lock nuts. See figure 7.

NOTE

Check the condition of flexible rubber disc if worn, cracked or damaged; replace all discs, front and back of tractor.

10. Discard the hardware you removed in step 9, along with coupling ② and fan.

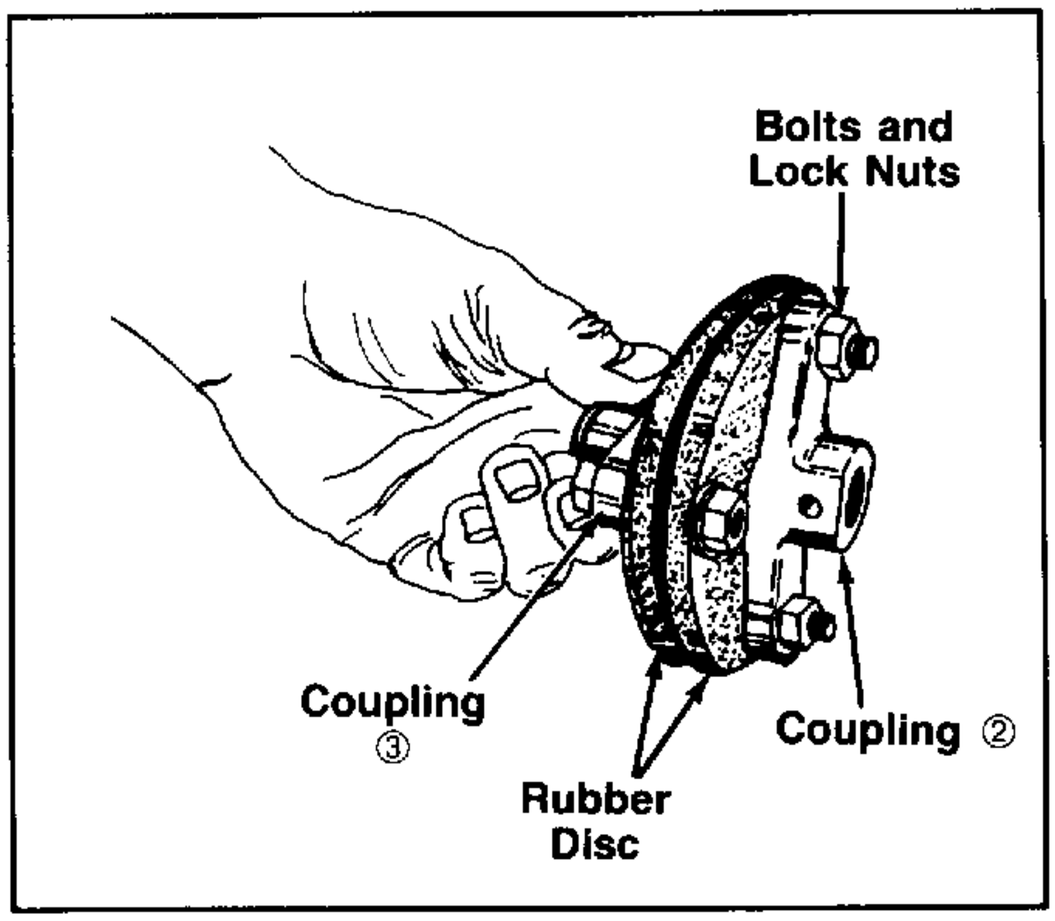

FIGURE 7.

11. Remove the bolts and nuts on coupling ③; reverse the bolts and nuts so that all bolt heads are facing forward (to the front of the tractor). See figure 8.

    Units with serial no. 756,301 and above will already have bolt heads facing forward.

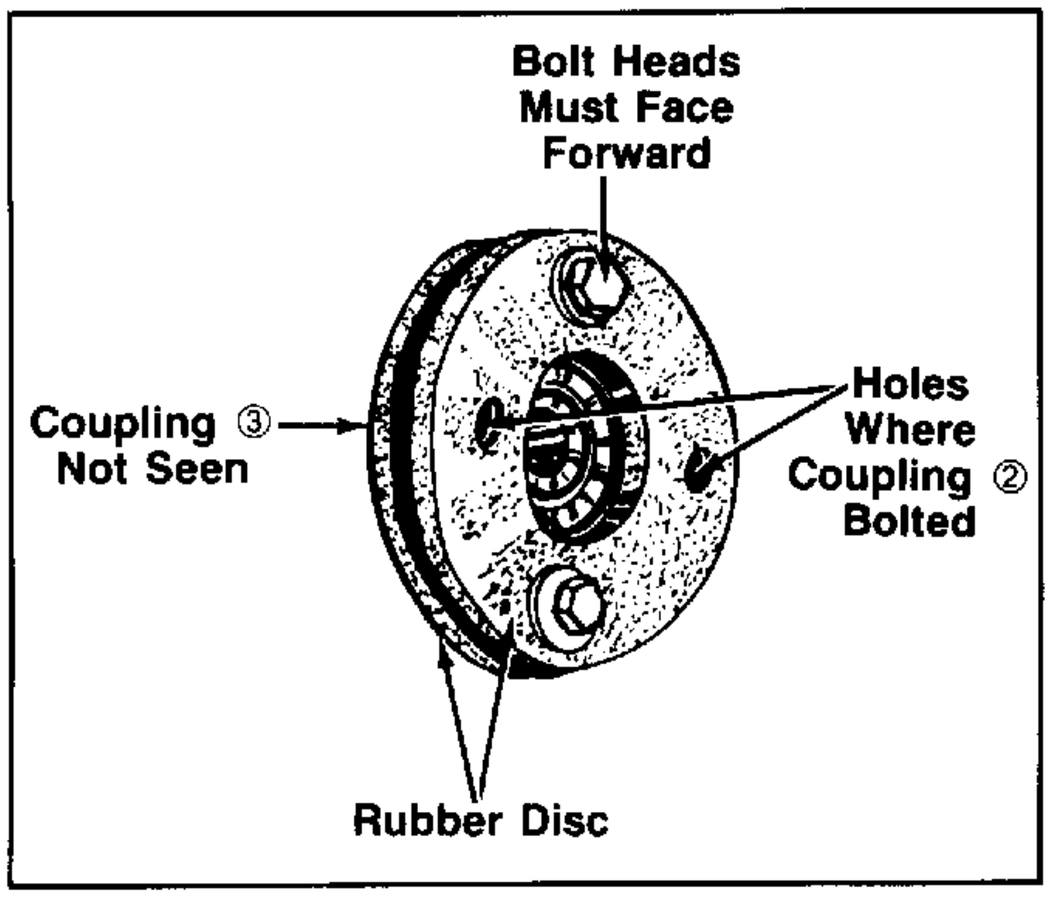

FIGURE 8.

12. Remove (2) hex bolts (Ref. 8) and hex nut (Ref. 9) from clutch assembly, shown in figure 9.
13. Remove wire (Ref. 5) from the clutch hub (Ref. 4). See page 1. (Clutch Breakdown)

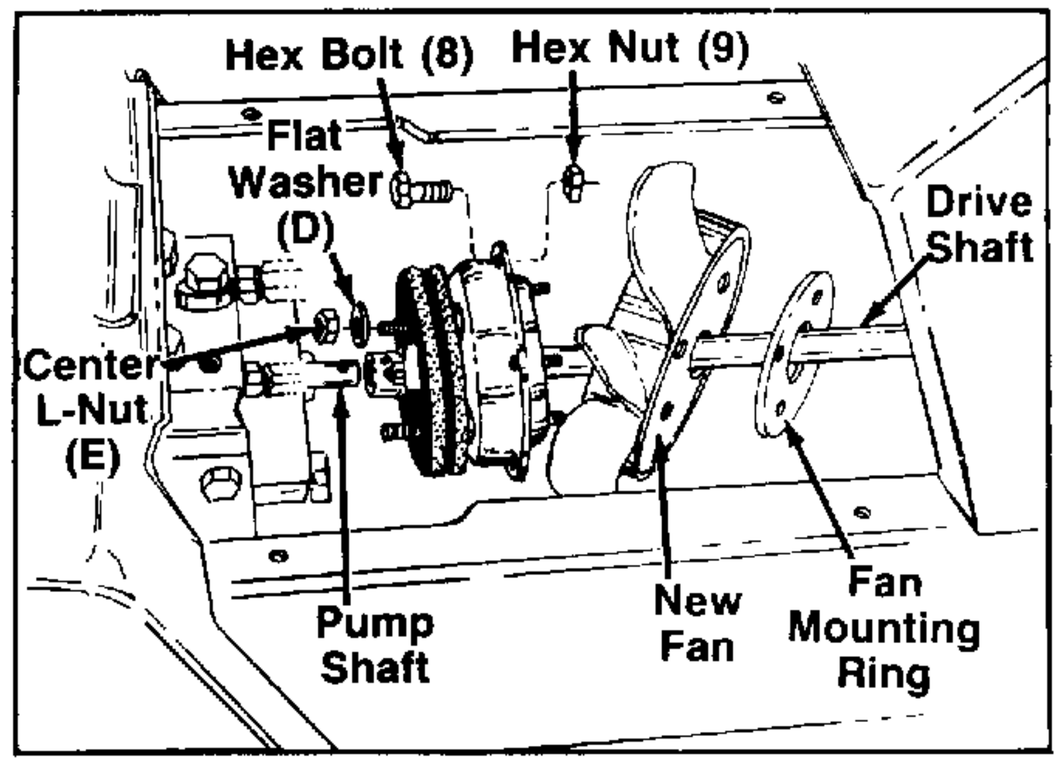

FIGURE 9.

14. Close clutch housing and reinstall bolts and nuts, removed in step 12. Tighten finger tight.
15. Place the new fan, then fan mounting ring on shaft of clutch assembly. See figure 10.

    NOTE: Leave fan and mounting ring on loose, do not mount at this time.

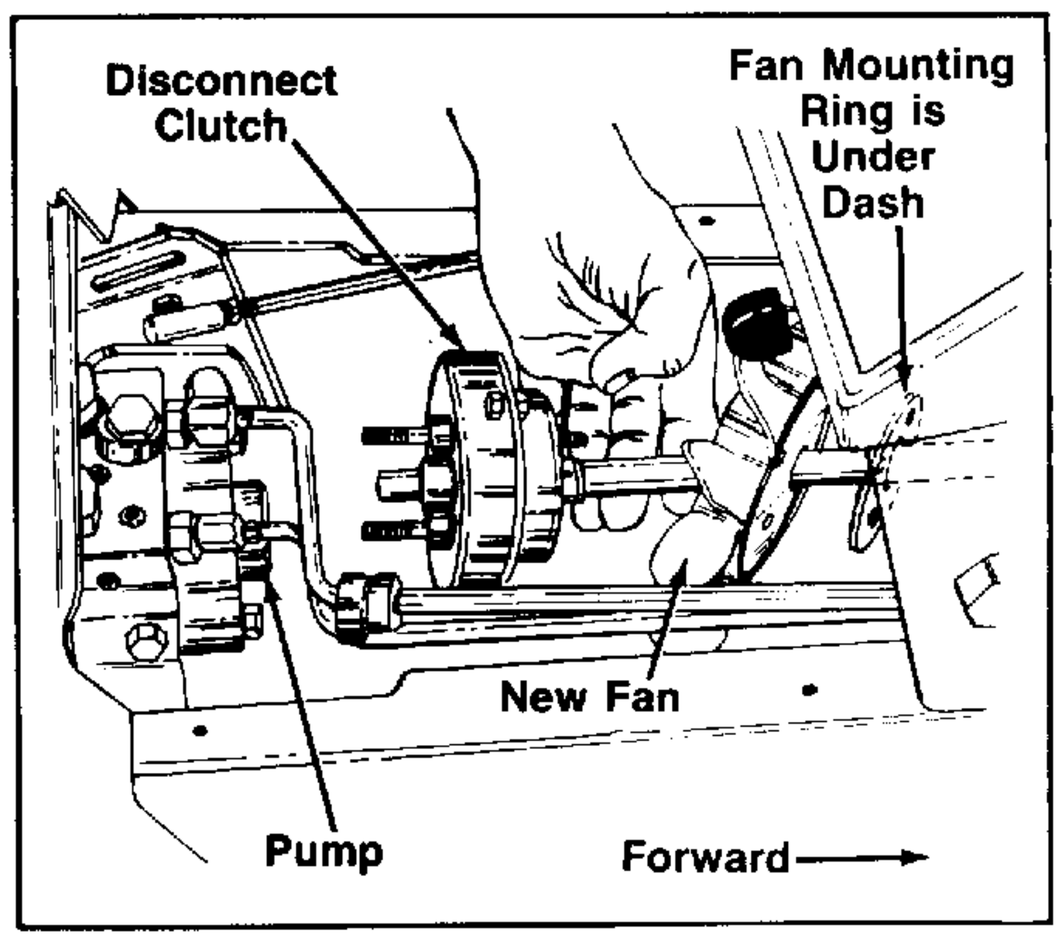

FIGURE 10.

16. Place front of drive shaft through coupling ①, flexible rubber discs and into alignable coupling as far forward as possible.
17. Insert a ¼-20 bolt into coupling ① and line up hole in drive shaft.
    NOTE: Do not install roll pin at this time.
18. Install coupling ③ with flexible discs onto drive shaft, and align (2) holes in flexible discs with bolts on rear clutch cover. See figure 9.
19. While holding clutch coupling and flexible disc assemblies together, line up with pump shaft and slide onto pump shaft. See figure 9.

NOTE: For kits 430 and 431 the pump shaft is splined and the roll pin hole must be aligned prior to next step.

NOTE: To aid in alignment of holes when driving roll pins, insert a slightly smaller bolt or pin into the opposite end of the casting and align the holes. When the roll pin is driven in the bolt or pin will be driven out. Remove the bolt or pin when driven out so it is not loose inside the unit.

20. Drive roll pin ③ (provided in kit) into coupling ③ and pump shaft.
21. Drive roll pin ① (provided in kit) into coupling ① and shaft of clutch assembly.
22. Now remove the two hex bolts (Ref. 8) and hex nuts (Ref. 9) from the clutch assembly and **discard the two hex nuts only.**
23. Slide the front clutch cover forward enough to allow you to line up the hole in clutch hub with the hole in the drive shaft.
24. Place a drift pin or a small enough bolt into hole to aid in alignment and drive in roll pin (J) ¼" x 2¼" long (provided in kit).
    NOTE: Roll pin should extend approximately 1/8" from each side of clutch hub.
25. Slide front clutch cover rearward and align four mounting holes with rear clutch cover and fasten securely with four hex bolts (H) and four hex patch nuts (C).
26. Assemble the two flat washers and lock nuts at rubber disc and rear clutch cover. Tighten securely. See figure 9.
27. Slide the new fan into position and secure with fan mounting ring and four hex patch nuts (C) (1/4-20 thread) provided in kit.
28. Move the lift unit on tractor to the highest position and check fan clearance at lift bracket. Grind off lift bracket if necessary. See figure 11.

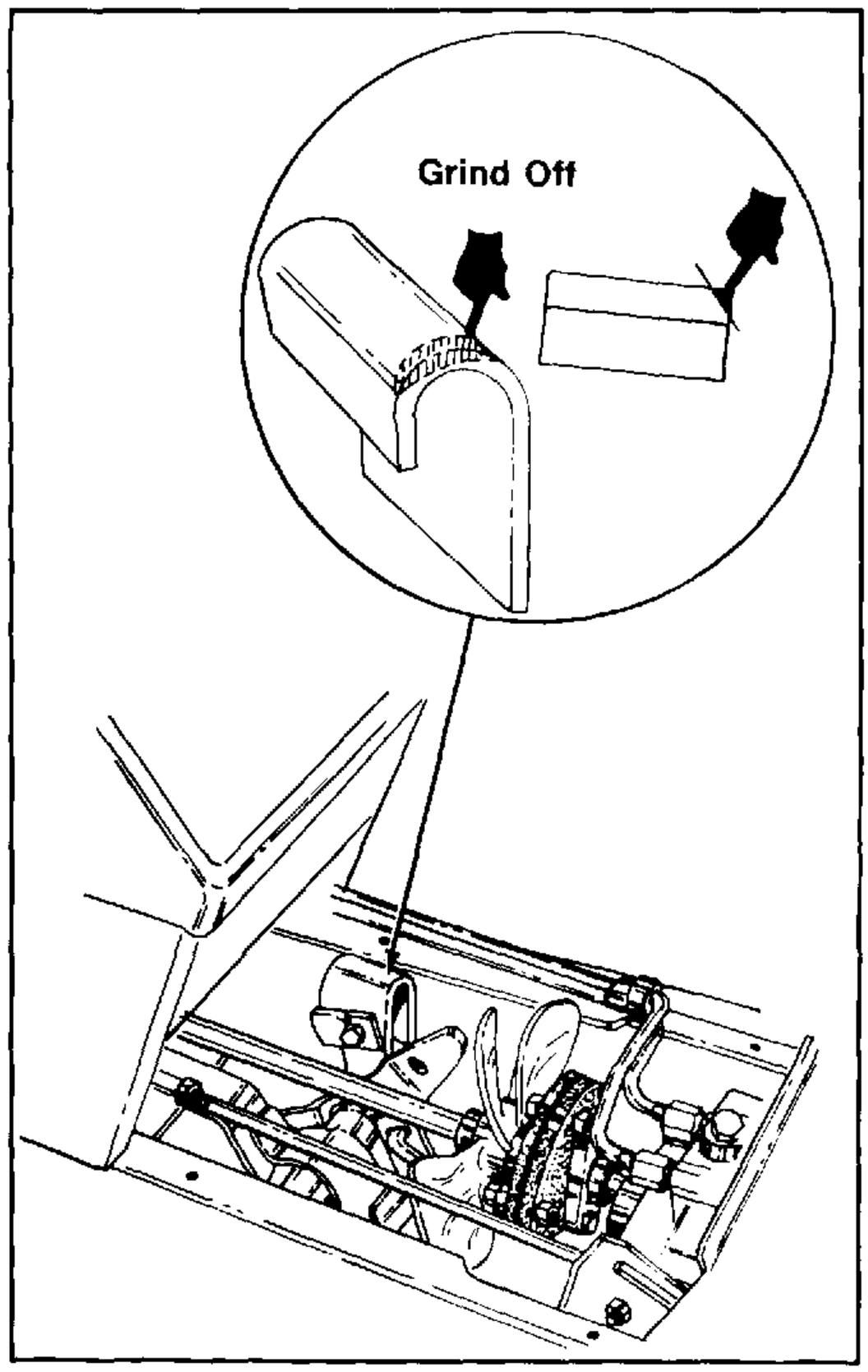

FIGURE 11.

HYDRUALIC LIFT
GENERAL INFORMATION

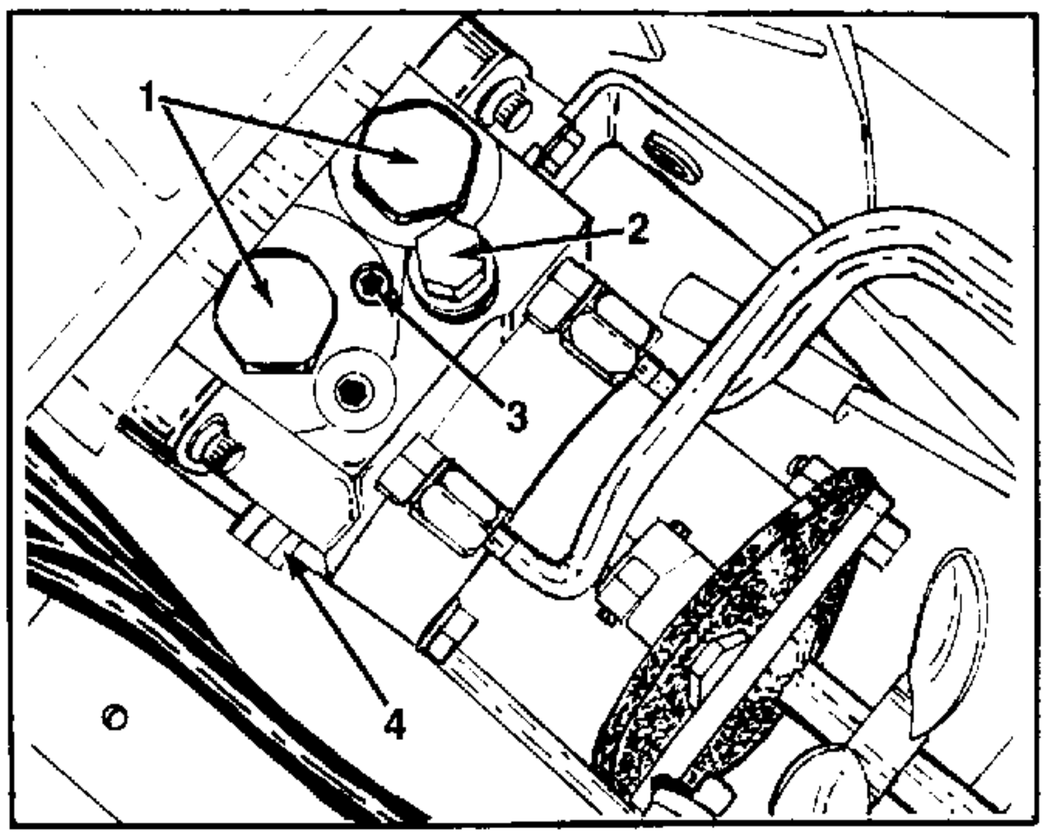

FIGURE 1.

1. Check Valves
2. Implement Lift Relief Valve
3. Test Port
4. Charge Pump Relief Valve

The charge pump furnishes fluid to the hydrostatic pump to make up for leakage and to circulate fluid for cooling. Charge pressure is regulated at a maximum of 1.3 MPa (200 psi) by the charge pressure relief valve. The excess flow over the valve is returned to the reservoir. On models equipped with hydraulic lift, this excess flow is directed to the implement control valve. The fluid returns from the valve to the reservoir. Moving the control handle to the raise or lower position will direct fluid to the hydraulic cylinder. Charge pressure during the raise or lower cycle will be equivalent to the lift pressure. Lift pressure is regulated by the lift pressure relief valve at 3.4 to 4.3 MPa (500 to 625 psi).

PRESSURE CHECK

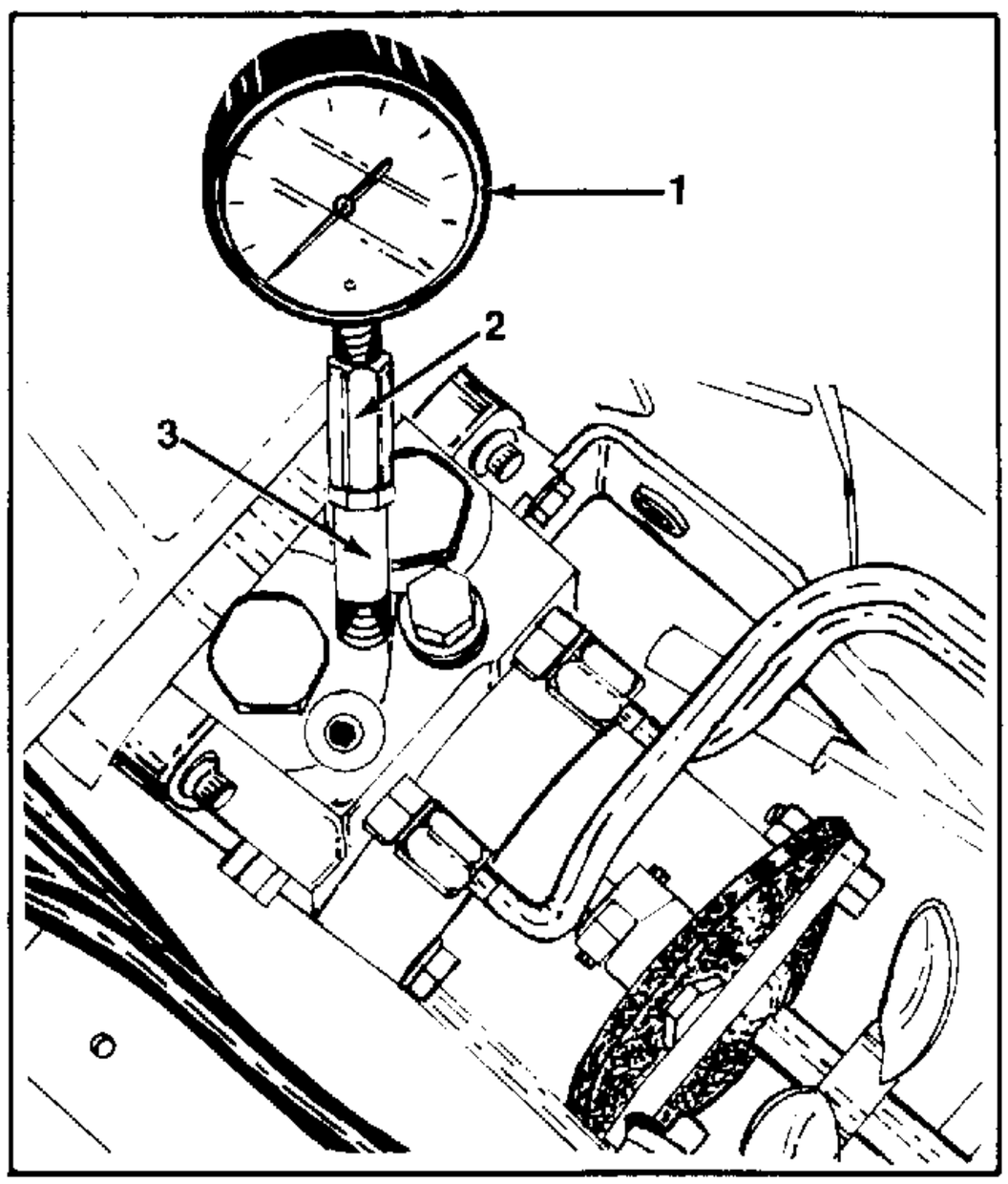

FIGURE 2.

1. Gauge
2. 1/8" to 1/4" Adapter
3. 1/8" Steel Pipe Nipple

1. Install a 7 MPa (1000 psi) gauge.
2. Start the engine and allow the transmission fluid to warm up to approximately 130°F. Operate the engine at maximum idle speed.
3. With the hydraulic control valve in neutral (if equipped), the gauge should indicate charge pressure as follows:

   Model 682/ . . . . . .62 to 1.1 MPa
   Manual Lift Tractor . . . . . (90 to 165 psi)

   Model 782 & 982/ . . . . . .62 to 1.3 MPa
   Hydraulic Lift Tractor . . . . . (90 to 200 psi)

4. With the control valve in the raised position and the cylinder at the end of its stroke, the gauge should indicate maximum lift pressure as:

   3.4 to 4.3 MPa
   Model 782 . . . . . (500 to 625 psi)

   4.8 to 6.2 MPa
   Model 982 . . . . . (700 to 900 psi)

CHARGE PUMP RELIEF VALVE ADJUSTMENTS

1. If charge pressure is not within specifications, remove the charge pump relief valve. Clean and inspect the valve. Refer to specifications for spring length dimensions. Replace the spring if necessary.
2. If the spring is within specifications, add or remove spring shims to bring charge pressure within specifications.
3. If shimming the relief valve does not correct the problem, replace the relief valve and shim as necessary.
4. If replacing the relief valve does not solve the problem, inspect the charge pump. Change the O-ring and if necessary replace the charge pump.
5. Remove and overhaul the transmission, inspecting for scored valve plates.

IMPLEMENT LIFT RELIEF VALVE ADJUSTMENTS

1. If lift pressure is not within specifications, remove the implement lift relief valve. Clean and inspect the relief valve. Refer to specifications for spring length dimension. Replace the spring if necessary.
2. If the spring is within specifications, add or remove shims to bring lift pressure within specifications.
3. If shimming the implement lift relief valve does not correct the problem, replace the relief valve.

LIFT CYLINDER

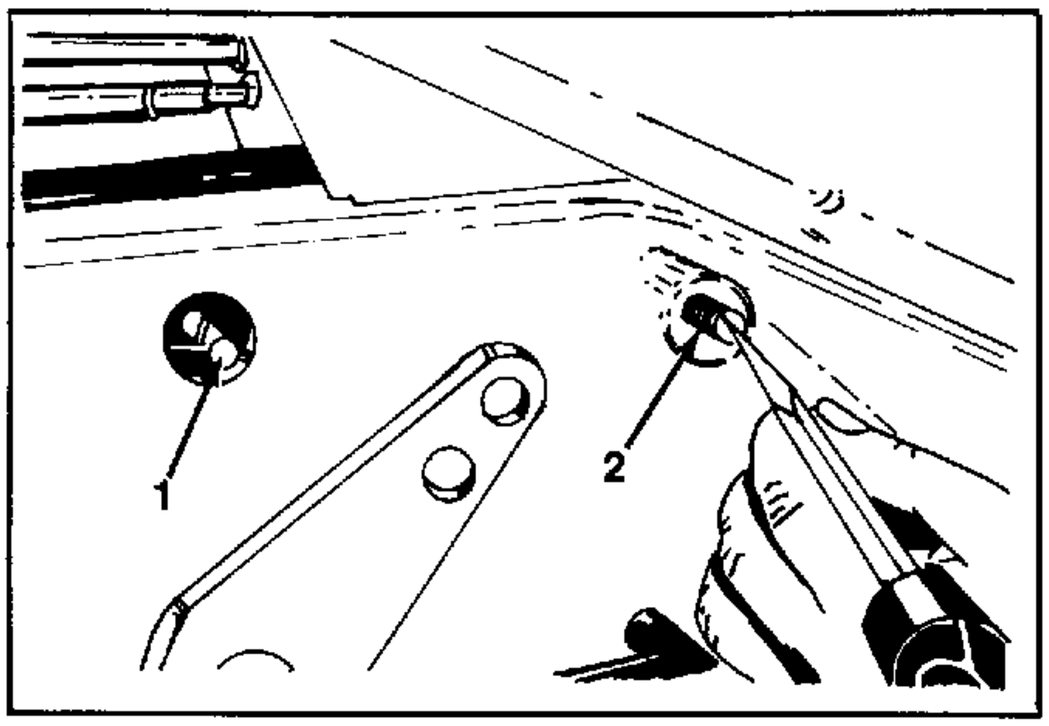

FIGURE 3.

1. Pin
2. Mounting Bolt

REMOVAL

1. Remove the frame cover.
2. Disconnect the hydraulic lines from the cylinder. Cap and plug the openings.
3. Remove the pin securing the cylinder to the lift bracket. Remove the pin thru the access hole in the RH side frame.
4. Remove the cylinder mounting bolt and remove the cylinder.

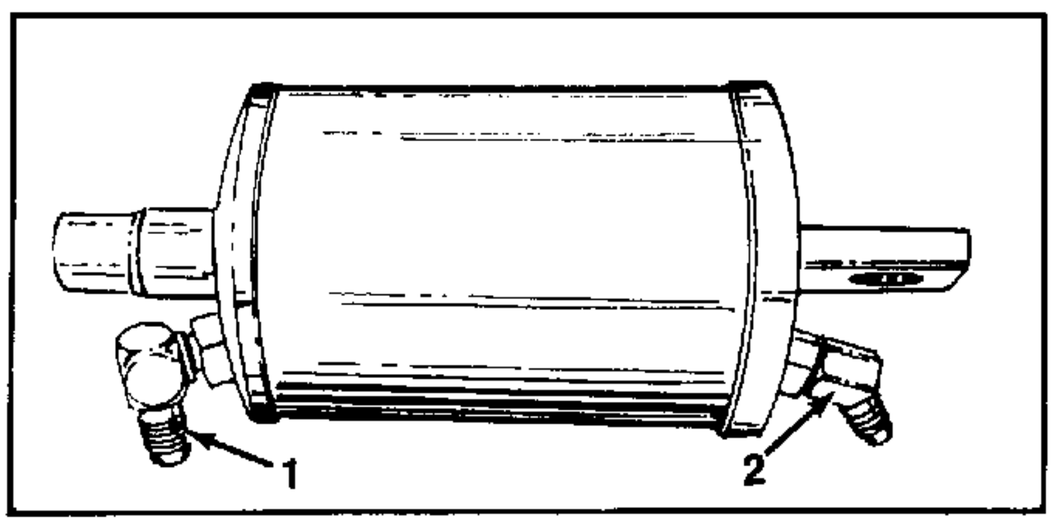

FIGURE 4.

DISASSEMBLY

1. Note the position of the 45° and 90° fittings, then remove them.

1. 90° Fitting
2. 45° Fitting

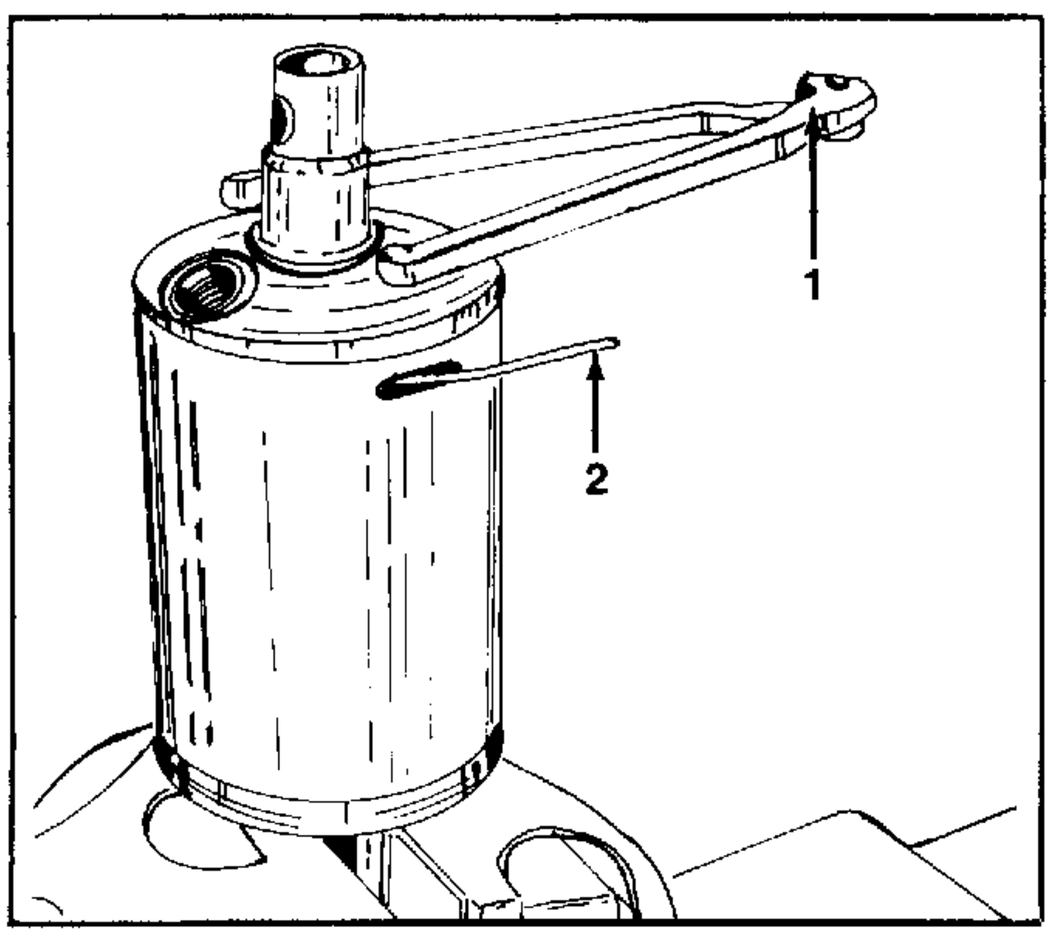

FIGURE 5.

2. Place the mounting end of the cylinder body in a vise. Insert the pins of a 3/16 inch adjustable face spanner wrench into the two holes of the cylinder head. Turn the cylinder head counterclockwise until the end of the retaining wire appears in the access hole of the cylinder body. Pry the end of the wire out of the hole and continue to turn the cylinder head counterclockwise to remove the retaining wire.

1. 3/16" Spanner Wrench
2. Retaining Wire

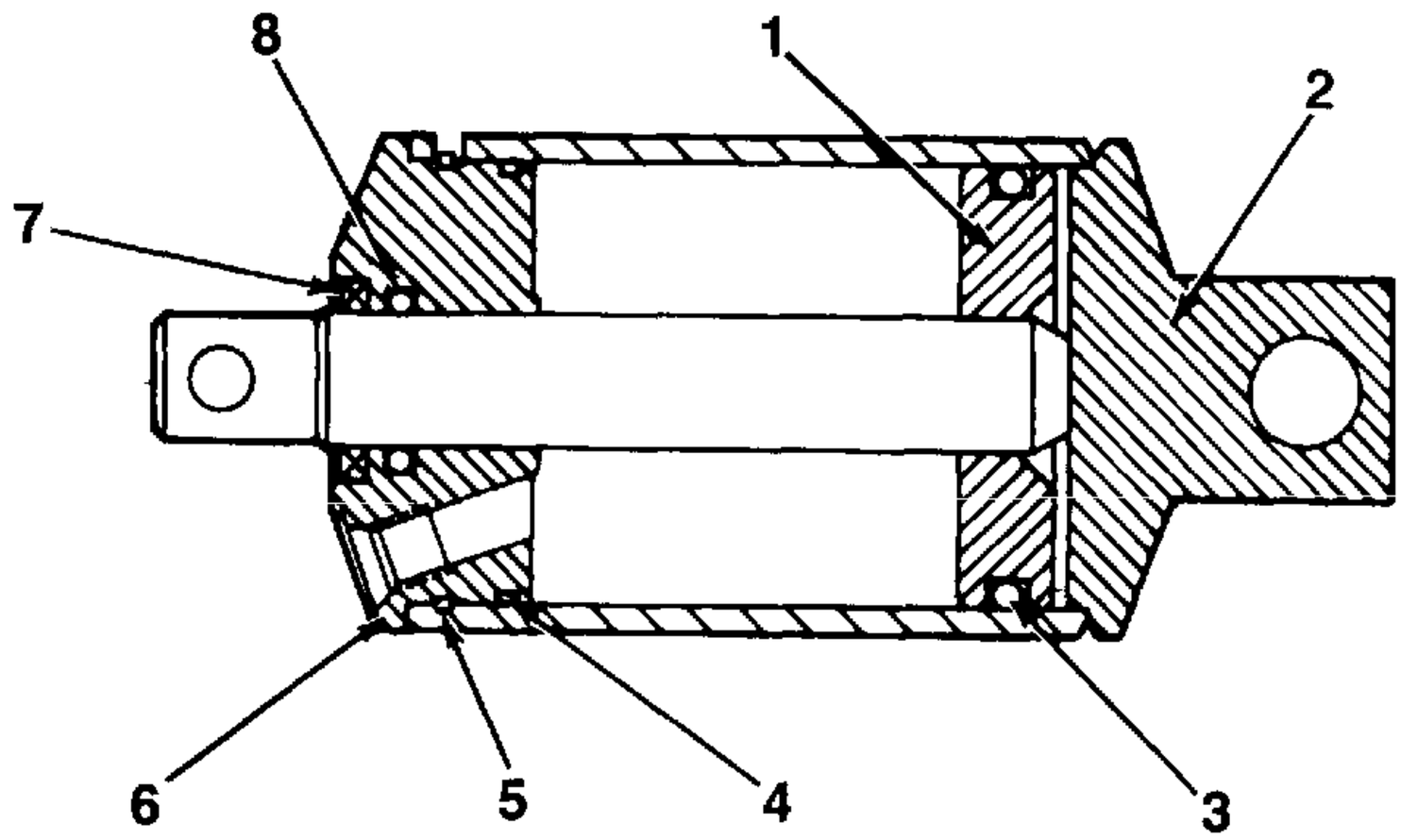

FIGURE 6.

1. Piston	5. Retaining Wire
2. Cylinder Body	6. Cylinder Head
3. Piston O-Ring	7. Wiper Seal
4. Outer O-Ring	8. Inner O-Ring

3. Pull the cylinder head out of the cylinder body and off of the piston.

NOTE: The cylinder head may become difficult to remove once the outer O-Ring enters the retaining ring groove in the cylinder body. If so, through the access hole in the cylinder body, cut and remove this O-Ring. This should allow the cylinder head to slide out easily.

4. Insert a drift through the hole in the piston rod. Remove the piston assembly by pulling the rod while turning it spirally.

   Replace all O-Rings and the wiper seal with new ones.

5. Inspect the piston and cylinder walls for scoring, pitting or damage. Clean all parts.

REASSEMBLY

1. Coat all the O-Rings with petroleum jelly. Thoroughly lubricate the inner walls of the cylinder body.
2. Reassembly is the reverse of the disassembly procedure.

INSTALLATION

Installation is the reverse of the removal procedure.

CONTROL VALVE

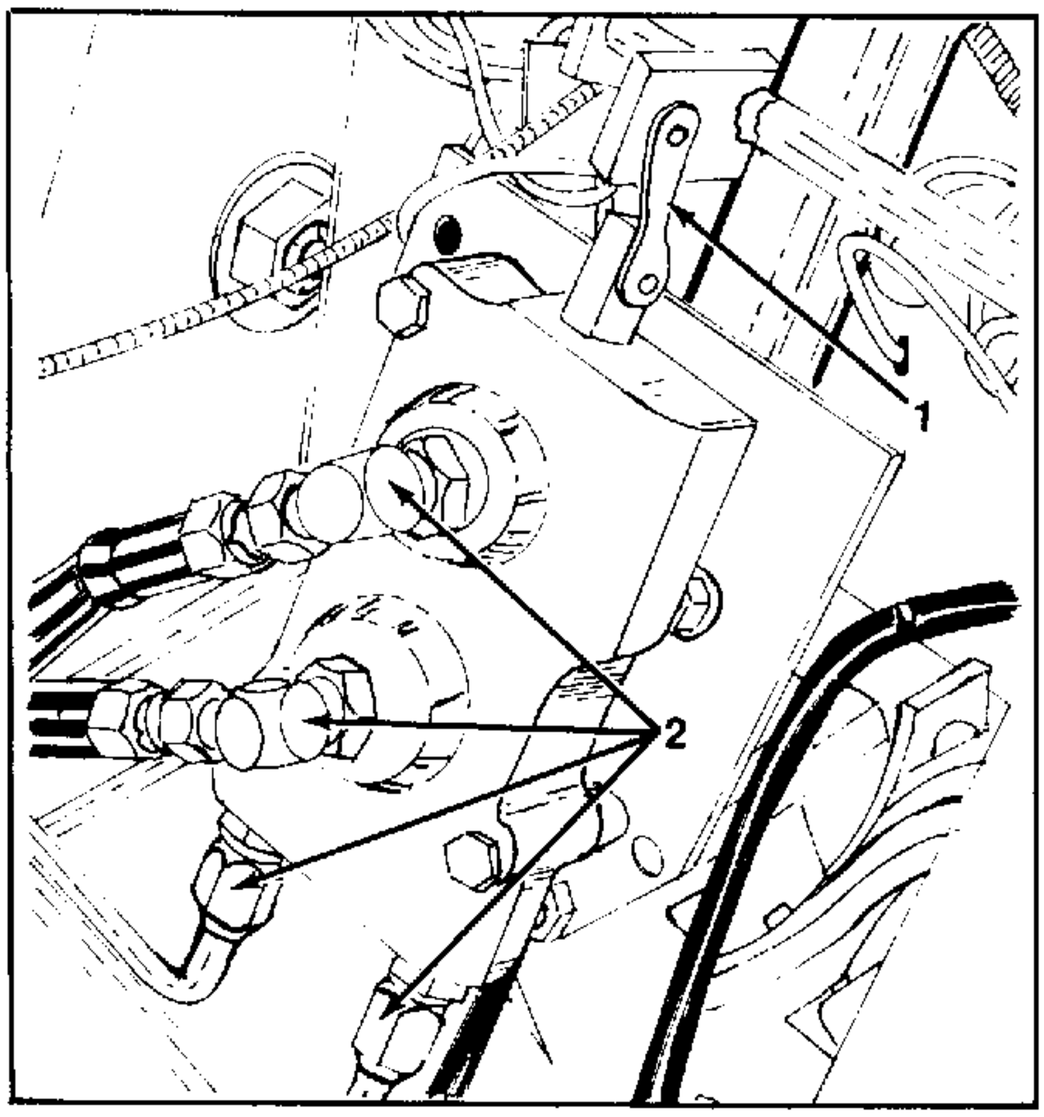

FIGURE 7.

REMOVAL

1. Raise the hood and remove an engine side panel.
2. Disconnect the hydraulic lines at the valve. Cap and plug the openings.

1. Connecting Link 2. Hydraulic Connections

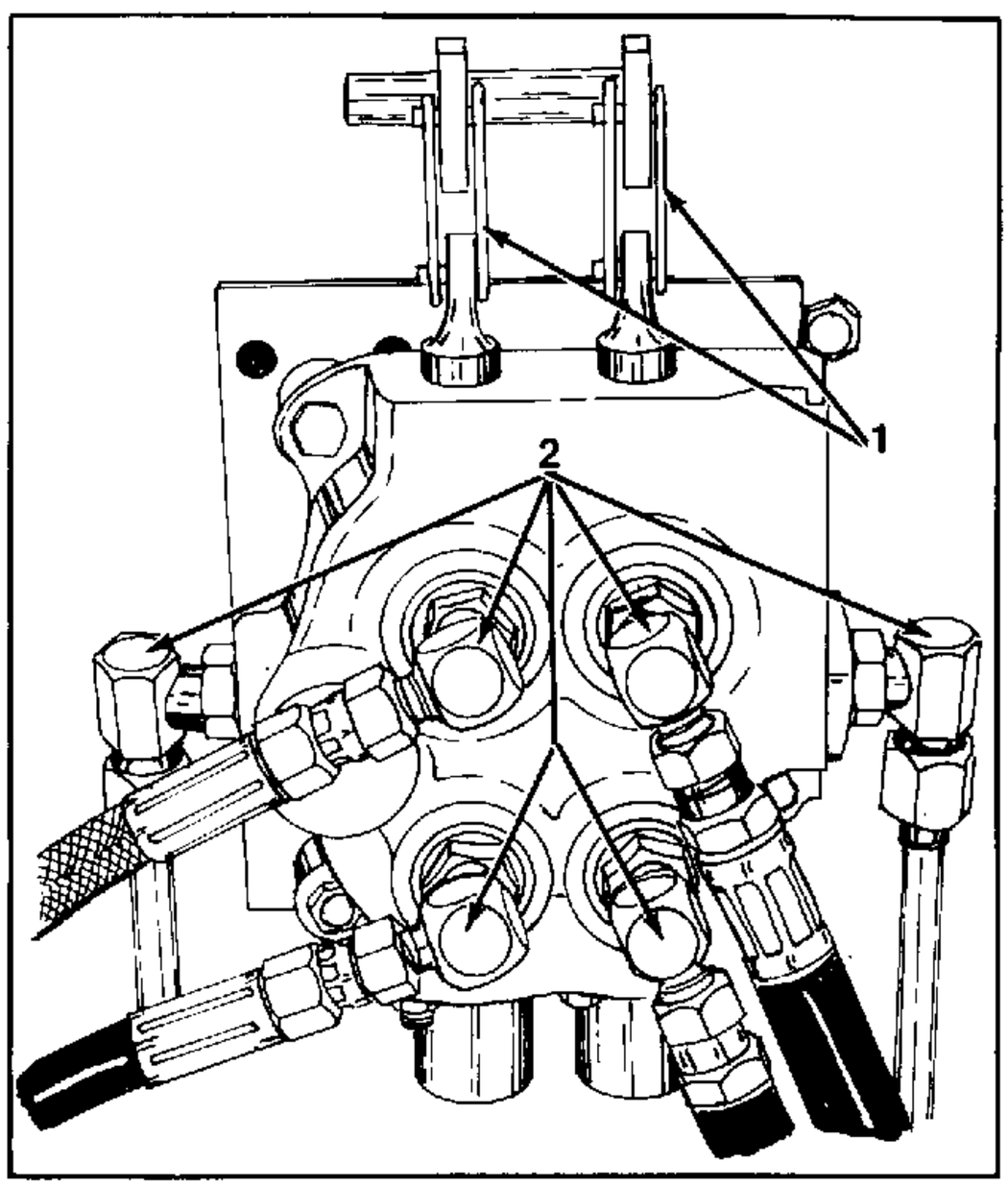

FIGURE 8.

3. Remove the connecting links.
4. Unbolt and remove the control valve.

1. Connecting Links 2. Hydraulic Connections

SINGLE SPOOL VALVE

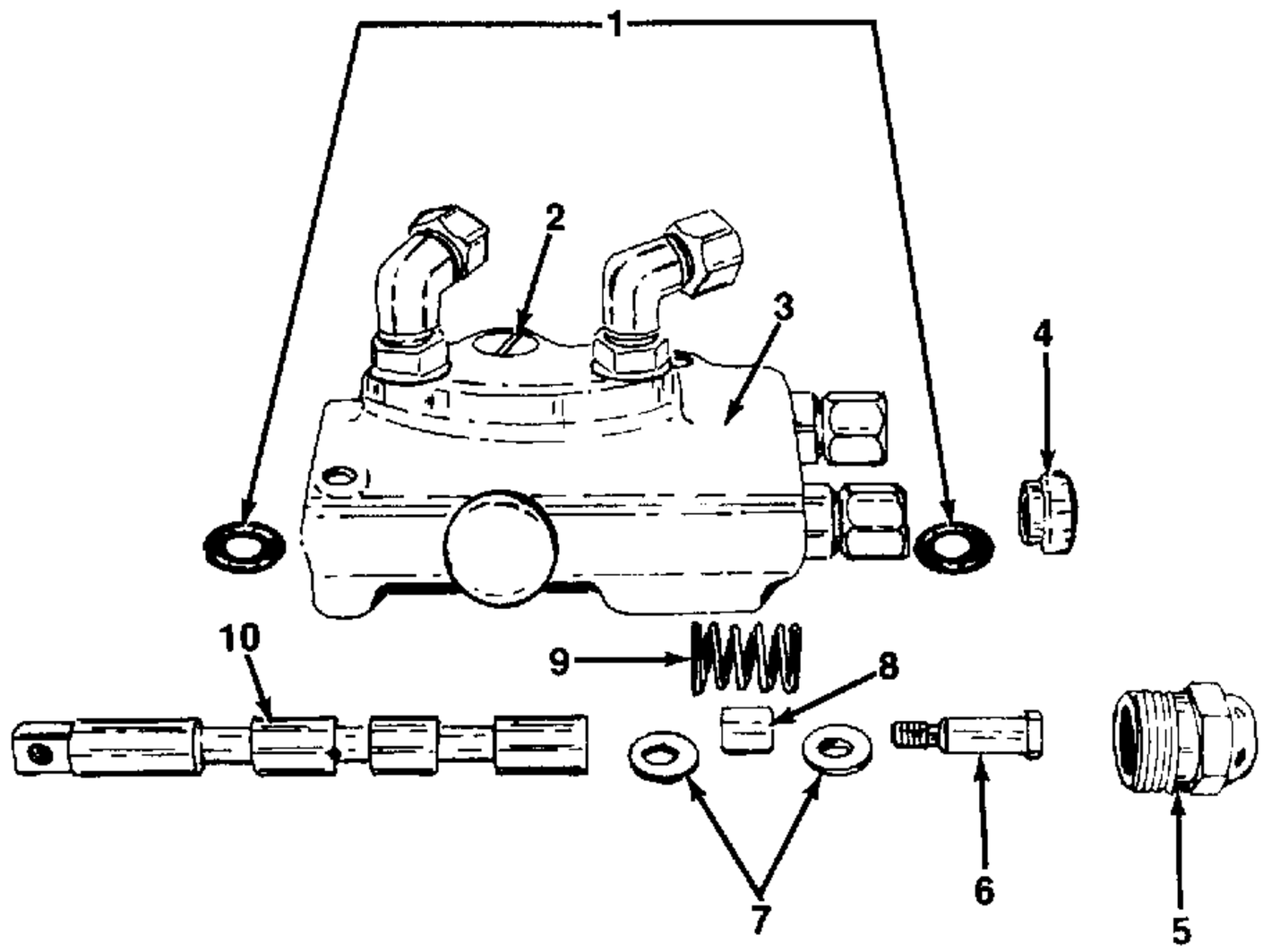

FIGURE 9.

1. O-Ring	6. Spool Screw
2. Check Valve Assembly	7. Washer
3. Valve Body	8. Spool Spacer
4. Bushing	9. Spring
5. Cap	10. Spool

DISASSEMBLY

1. Secure the control valve in a vise equipped with brass jaws.
2. Remove the cap and slide the spool out. The bushing and O-Ring will probably come out with the spool.

CLEANING AND INSPECTION

1. Clean all parts in clean solvent.
2. Inspect the spool and body for scoring or wear. Replace as an assembly, if necessary, as the spool and body are not serviced individually.
3. Inspect all other parts and replace as necessary.

REASSEMBLY

1. Coat all parts thoroughly with clean Hy-Tran to ease assembly.
2. Assemble the centering spring, washers and shoulder bolt. Coat the threads with IH Thread Sealer 634 016 C1 (Loctite 262) and install on the valve spool. Torque the shoulder bolt 7 to 10 N•m (60 to 90 in. lbs.). Check the movement of the spring and washers to make sure the bottom washer is not caught between the shoulder bolt and the valve spool.
3. Install the O-Rings and bushings in the body.
4. Install the valve spool.
5. Install the cap and tighten 27 to 34 N•m (20 to 25 ft. lbs.).

DOUBLE SPOOL VALVE

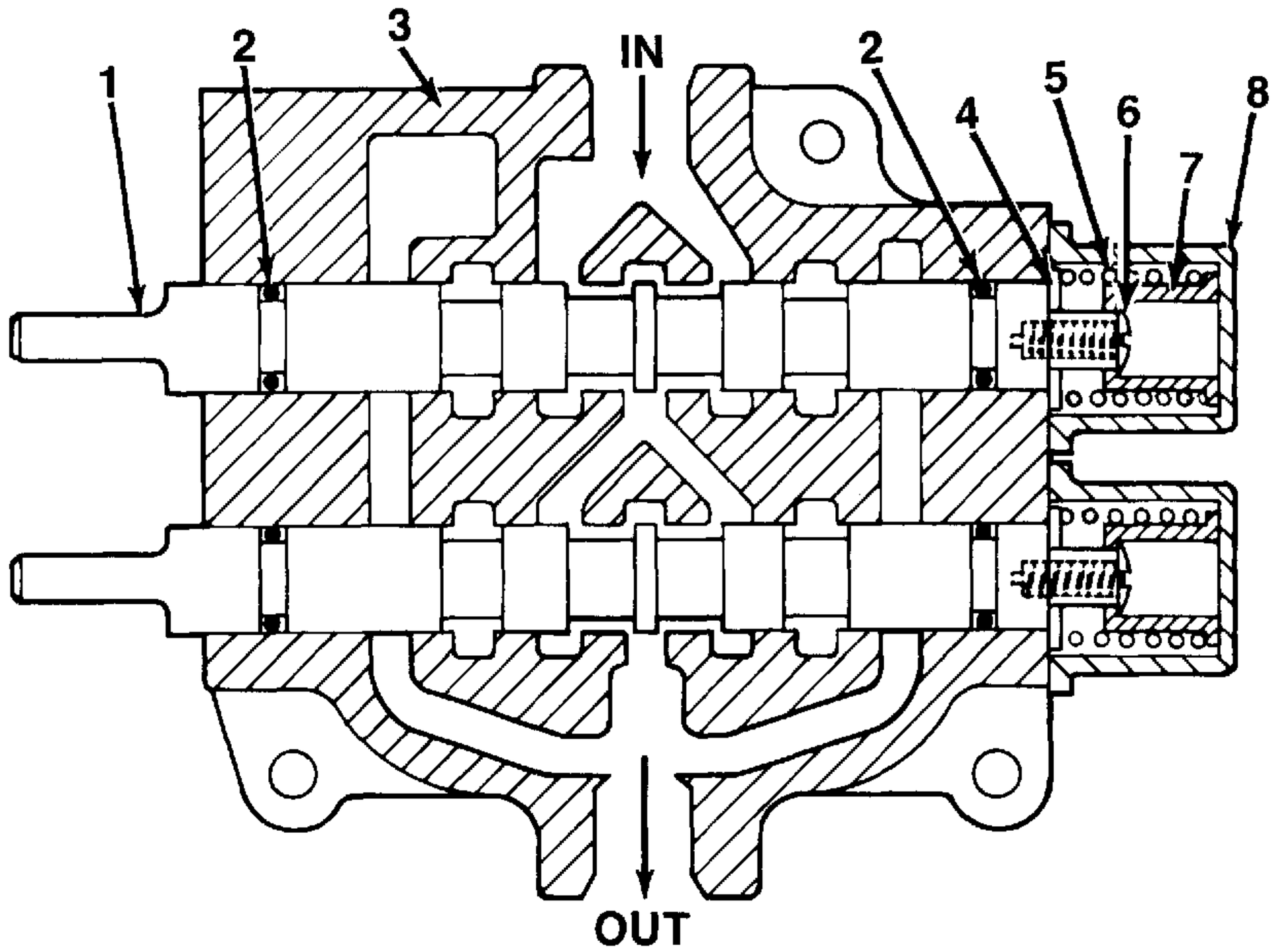

FIGURE 10.

1. Spool	5. Spring
2. O-Ring	6. Screw
3. Valve Body	7. Spacer
4. Washer	8. End Cap

DISASSEMBLY

1. Secure the control valve in a vise equipped with brass jaws.
2. Remove the end caps.
3. Hold the spool and remove the centering spring screw, centering spring, spacer and washer.
4. Slide the spool out the rear just far enough to remove the rear O-Ring.
5. Slide the spool out of the valve to the front and remove the front O-Ring.

CLEANING AND INSPECTION

1. Clean all parts in clean solvent.
2. Inspect the spool and body for scoring or wear. Replace as an assembly, if necessary, as the spool and body are not serviced individually.
3. Inspect all other parts and replace as necessary.

REASSEMBLY

1. Coat all parts thoroughly with clean Hy-Tran to ease assembly.
2. Install the front O-Rings on the spools and slide them in through the front.
3. Push the spools just far enough through to install the rear O-Rings and centering mechanism. Pull each spool forward to be sure the spacer is on the spool, not the washer.
4. Install the end caps.

INSTALLATION

1. Install the control valve by reversing the removal procedure.
2. Cycle the cylinder several times to expel the air from the system and check for leaks.
3. Check the fluid level in the rear housing and fill to proper level with Hy-Tran or its equivalent.

ATTACHMENTS
P.T.O. TROUBLE SHOOTING AND VX SERIES CLUTCHES

Contents

	Page
Mounting of Rear P.T.O.—(433) and 3-Point Hitch (383)	4-2 thru 4-16
Front-P.T.O.—Trouble Shooting	4-17 thru 4-20
P.T.O. Clutch	4-21 thru 4-22

TRACTOR SERVICE MANUAL FOR GARDEN TRACTORS
S/N 737,625 - 799,999

SECTION 1. ENGINE

SECTION 2. CHASSIS

SECTION 3. DRIVE SYSTEMS AND HYDRAULICS

SECTION 4. ATTACHMENTS

SECTION 5. SAFETY

THE INSTALLATION OF REAR PTO AND 3-POINT HITCH, WILL REQUIRE THIS INSTALLATION INSTRUCTIONS MANUAL ONLY.

DISCARD THE INSTALLATION INSTRUCTIONS PACKED WITH THE 3-POINT HITCH MODEL (190-383-100) FORM NO. 772-3872.

ALL PARTS SHOULD BE LAYED OUT AND NOT MIXED FROM EACH KIT.

3-POINT HITCH KIT—MODEL NO. 383

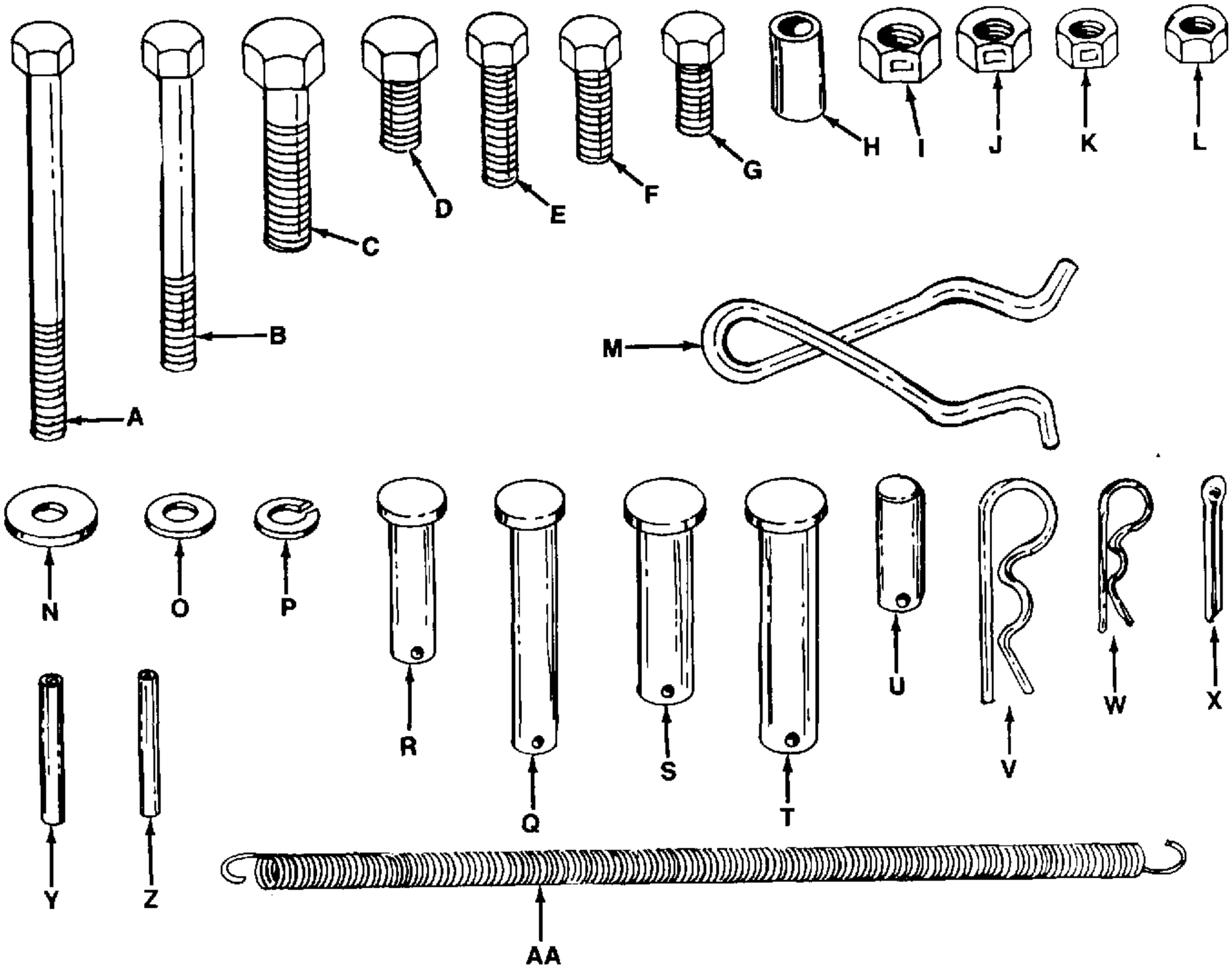

REF.	QTY.	DESCRIPTION	REF.	QTY.	DESCRIPTION
A	6	Hex Bolts—Patch 3/8-16 x 4" Lg.	O	8	Flat Washers .406 I.D. x .81 O.D. x .05
B	2	Hex Bolts—Patch 3/8-16 x 3¼" Lg.			
C	2	Hex Bolts ½-13 x 1¾" Lg.	P	9	Lock Washers 3/8" I.D.
D	4	Hex Bolts 7/16-14 x ¾" Lg.	Q	1	Clevis Pin ½" x 1½" Lg.
E	2	Hex Bolts 3/8-16 x 1¼" Lg.	R	1	Clevis Pin ½" x 2½" Lg.
F	7	Hex Bolts 3/8-16 x 1" Lg.	S	2	Clevis Pins 5/8" x 1.9" Lg.
G	4	Hex Bolts 3/8-16 x ¾" Lg.	T	1	Clevis Pin 5/8" x 2-3/8" Lg.
H	6	Spacers	U	1	Clevis Pin (No Head)
I	2	Hex Lock Nuts ½-13 Thd.	V	1	Hairpin Cotter—Large
J	4	Hex Lock Nuts 7/16-14 Thd.	W	3	Hairpin Cotters—Small
K	8	Hex Lock Nuts 3/8-16 Thd.	X	1	Cotter Key 3/16 x 7/8" Lg.
	1	Hex Nut 3/8-16 Thd.	Y	2	Roll Pins ¼" x 1½" Lg.
M	1	Storage Bail	Z	1	Roll Pin 3/16" x 1½" Lg.
N	1	Flat Washer 3/8 x 1" x .100	AA	1	Extension Spring

3-POINT HITCH KIT—MODEL NO. 383

IDENTIFICATION OF PARTS:

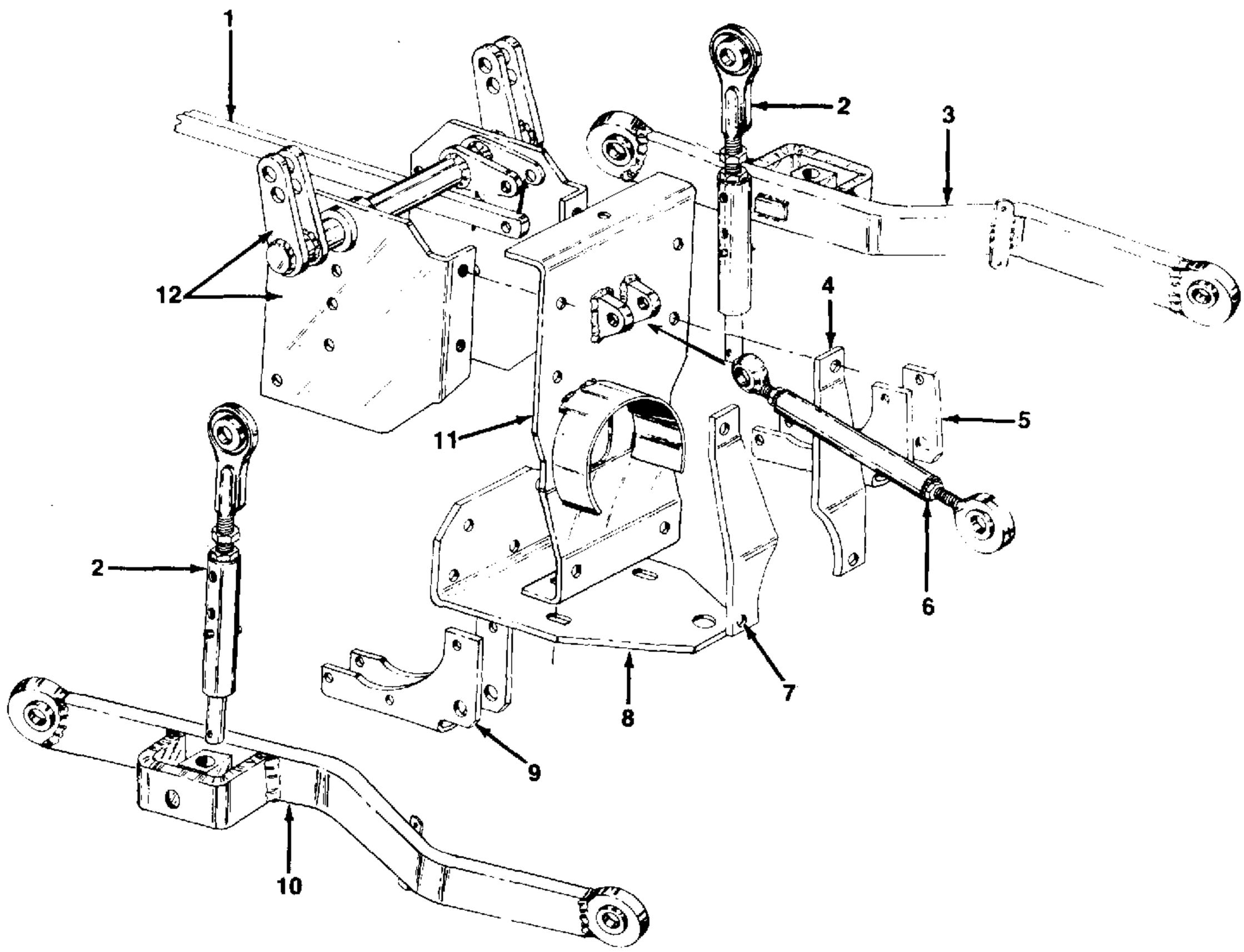

REF. NO.	DESCRIPTION	REF. NO.	DESCRIPTION
1	Bar, Implement Lift	7	Cam, Sway Limiter—L.H.
2	Link Ass'y., Lift	8	Drawbar Plate
3	Link Ass'y., Lower	9	Lower Link Support Plate
4	Cam, Sway Limiter—R.H.	10	Link Ass'y., Lower
5	Lower Link Support Plate	11	Drawbar Support Plate Ass'y.
6	Link Ass'y., Upper	12	Rocker Shaft Ass'y.

REAR P.T.O. KIT—MODEL NO. 433

Identification of Parts:

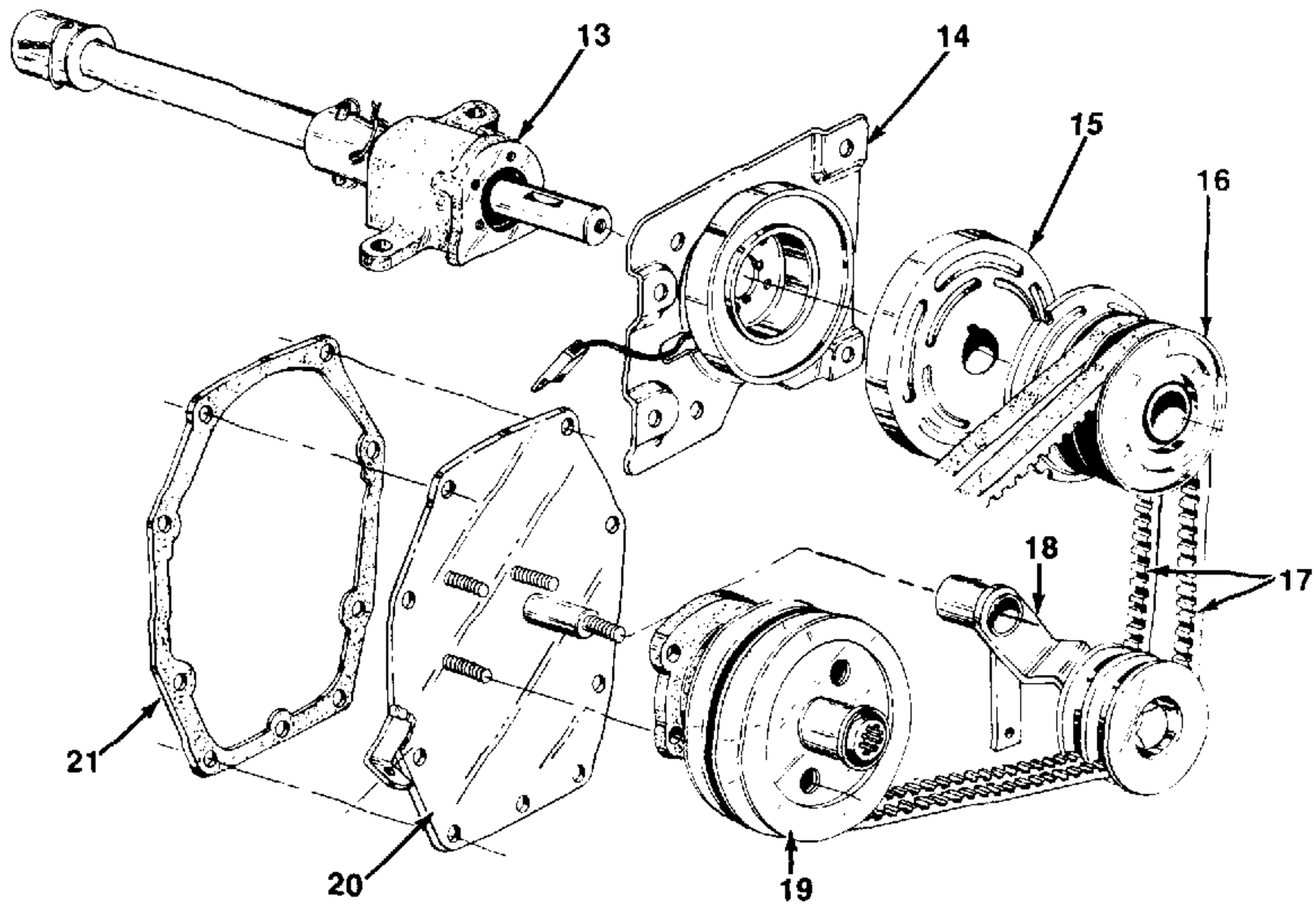

REF. NO.	DESCRIPTION	REF. NO.	DESCRIPTION
13	Rear P.T.O. Clutch Shaft	18	Idler Bracket Ass'y.
14	Field Ass'y., Clutch	19	Double Pulley and Rear P.T.O. Bearing Housing
15	Rotor, Clutch		
16	Armature, Clutch	20	Rear Cover Plate Ass'y.
17	Matched Set of Belts	21	Gasket, Rear Cover Plate

REAR P.T.O. KIT—MODEL NO. 433

Contents of Hardware Pack:

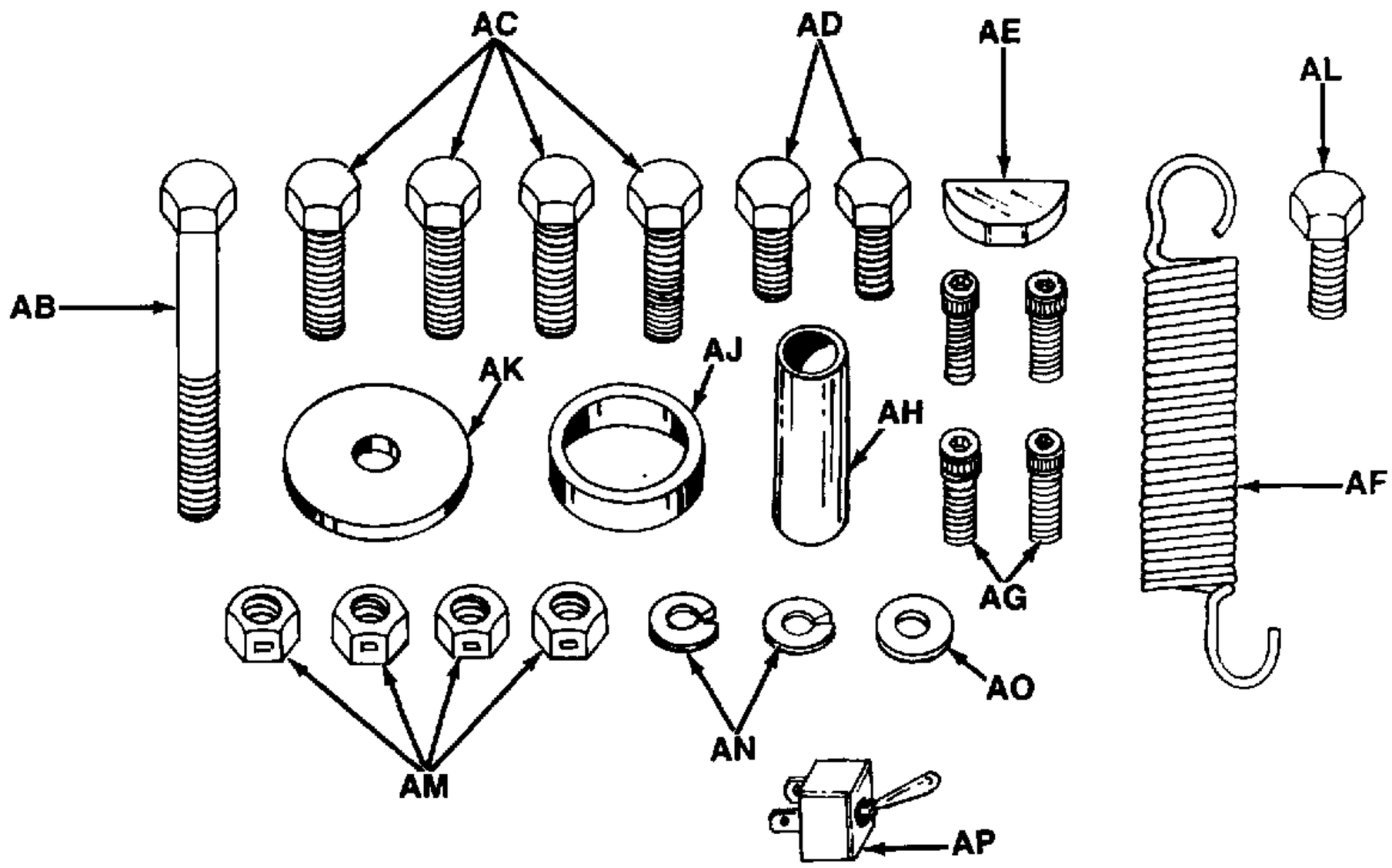

REF.	QTY.	DESCRIPTION	REF.	QTY.	DESCRIPTION
AB	1	Hex Bolt—3/8-16 x 2¾″	AJ	1	Spacer 1″ x 1¼″ x .36
AC	4	Hex Bolts—Patch 3/8-16 x 1″	AK	1	Fl-Wash. .406 x 1.50 x .094 Thk.
AD	2	Hex Bolts—Patch 3/8-16 x ¾″	AL	1	Hex Bolt 3/8-16 x 1″ Lg. Gr. 8
AE	1	Woodruff Key	AM	4	Hex Cent. L-Nut 3/8-16 Thd.
AF	1	Extension Spring	AN	2	L-Wash. 3/8″ I.D.
AG	4	Socket Hd. Scr. ¼ x ½	AO	1	Fl-Wash. .406 x 1.0 x .105 Thk.
AH	1	Spacer ½ x 11/16 x 1-3/8″ Lg.	AP	1	P.T.O. Directional Switch

ASSEMBLY INSTRUCTIONS

1. Lower the tractor lift to full down position. Check access hole to make sure headed pin 1/2 x 1.50″ can be removed in step 30. See figure 7.
2. Raise the seat and seat bracket. Unplug the seat safety switch. See figure 1. Model 1572 only.

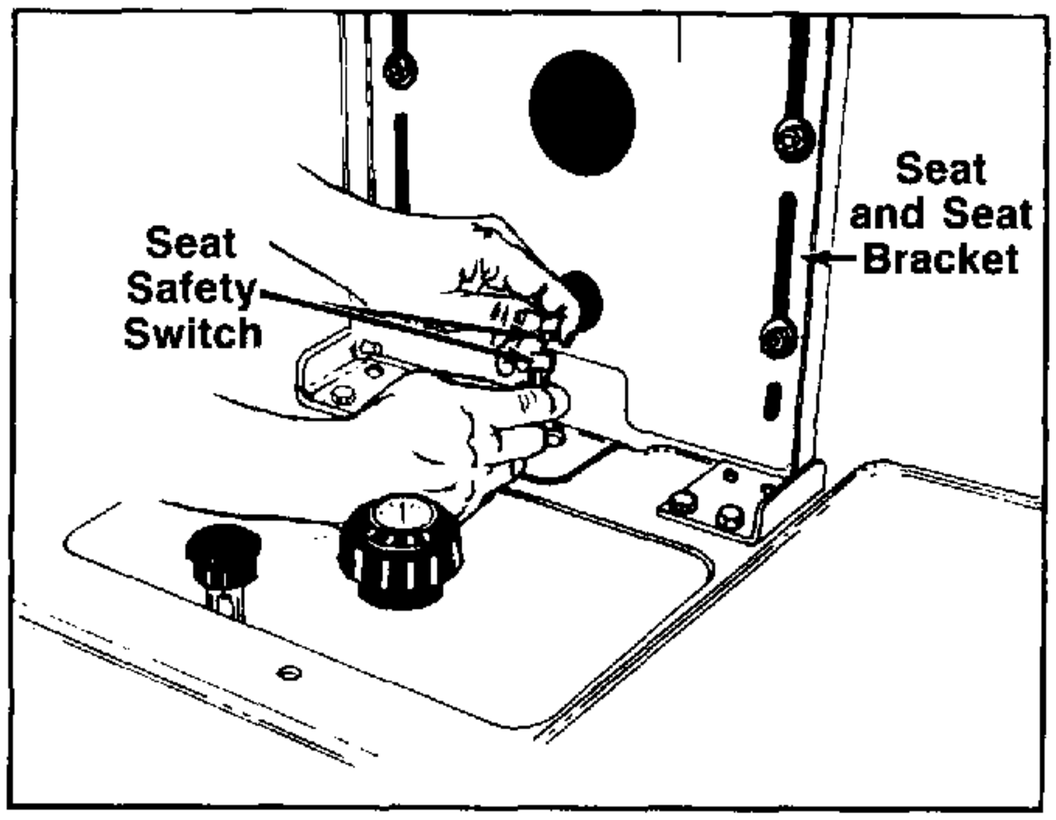

FIGURE 1.

3. Remove the four bolts holding the seat and seat bracket to fender assembly. See figure 2. Model 1572 shown.

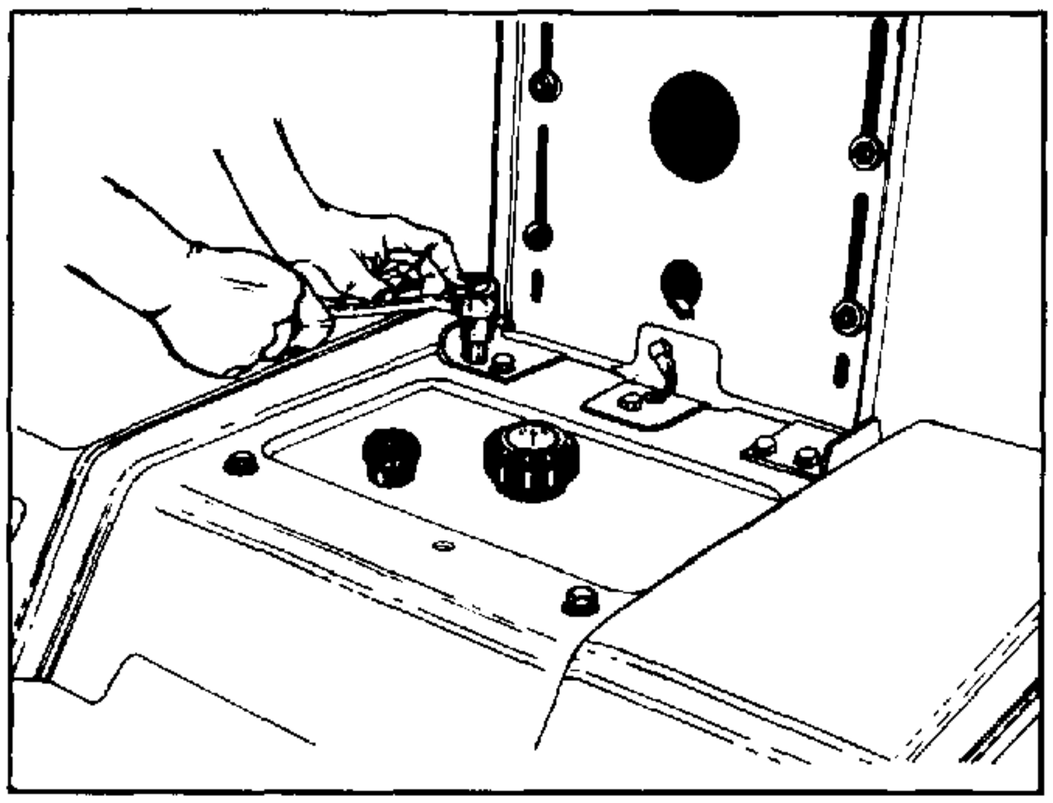

FIGURE 2.

4. Remove the center cover, by removing one bolt and flat washer. See figure 3.

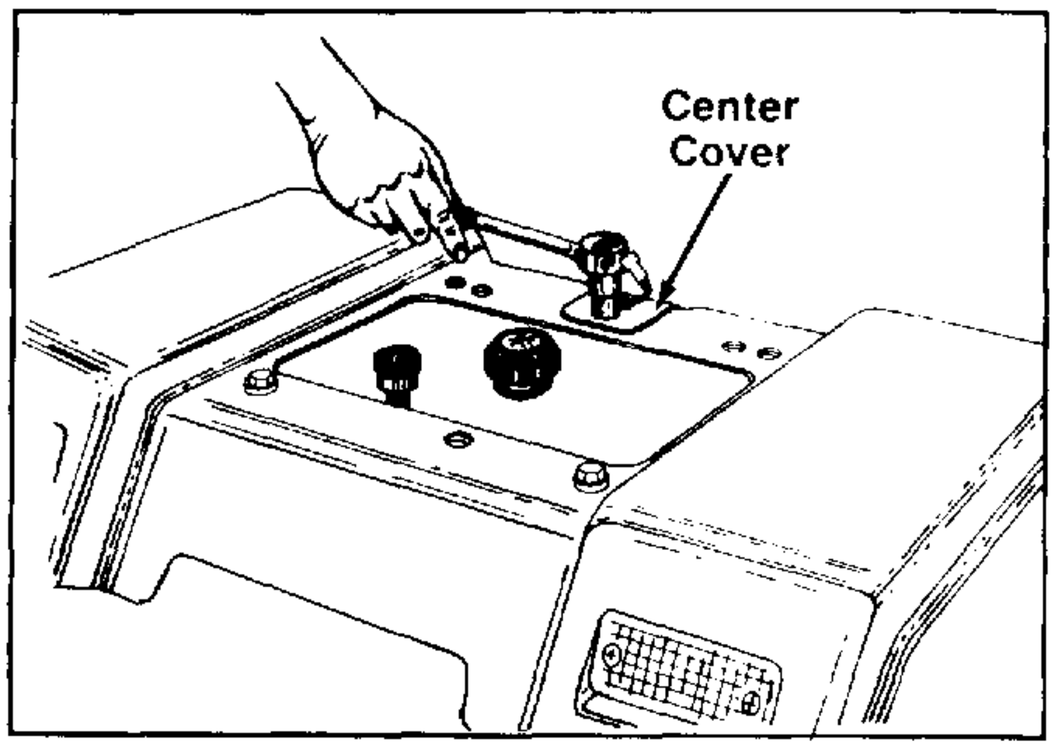

FIGURE 3.

5. On other models, other than 1572, remove the battery, by removing the negative cable first, then the positive cable. See figure 4.

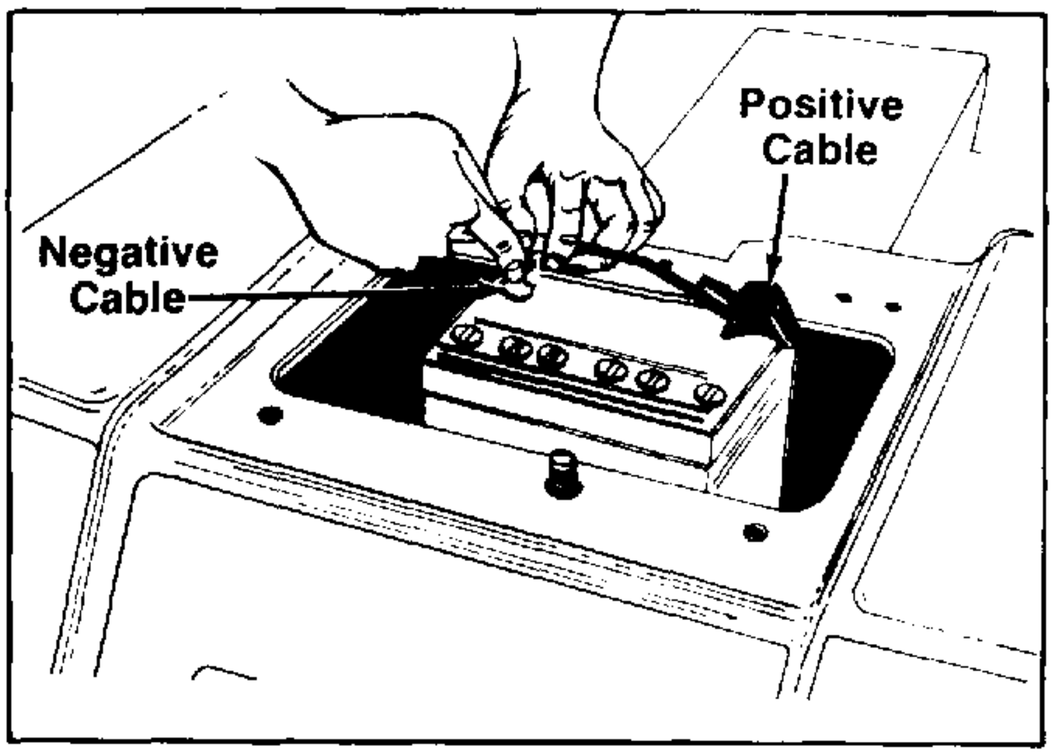

FIGURE 4.

6. Remove the battery hold down strap.
7. Remove the battery from the tractor. NOTE: When removing the battery the battery drain hose must be pinched closed to prevent battery acid from dripping. (NOTE: On Model 1572 the positive cable must be disconnected, it is not necessary to remove the battery.)
8. Remove the safety switch cover, then remove the lead connecting the switch to the harness. Remove the switch from the fender. See figure 5.

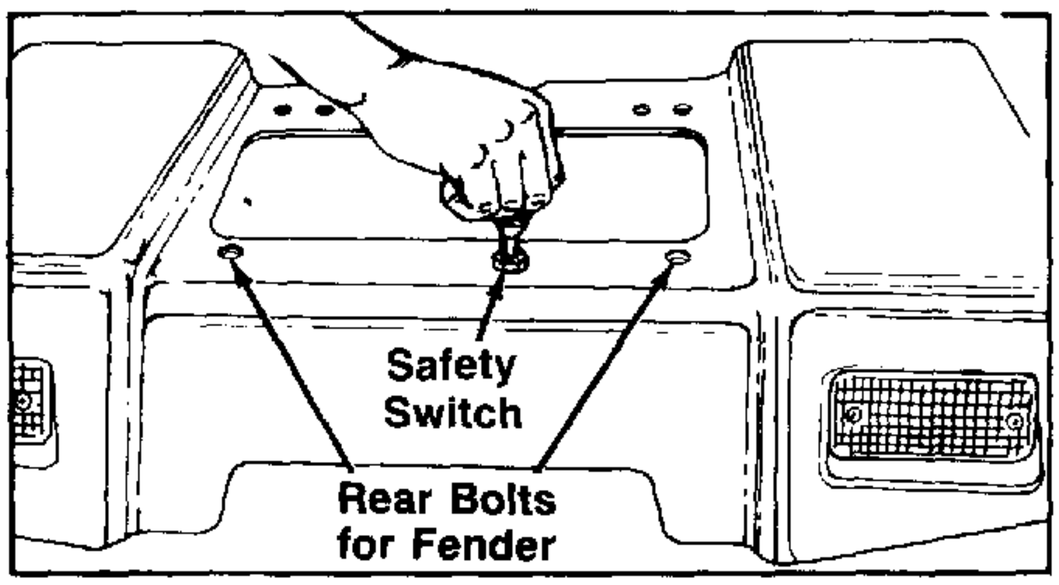

FIGURE 5.

9. Remove the two rear bolts holding the fender assembly. See figure 5.
10. Place the pedals in the unlocked position.
11. Remove the cam and cam knob from right hand side of tractor. See figure 6.
12. Remove three bolts on each side of fender assembly at the running boards. See figure 6.

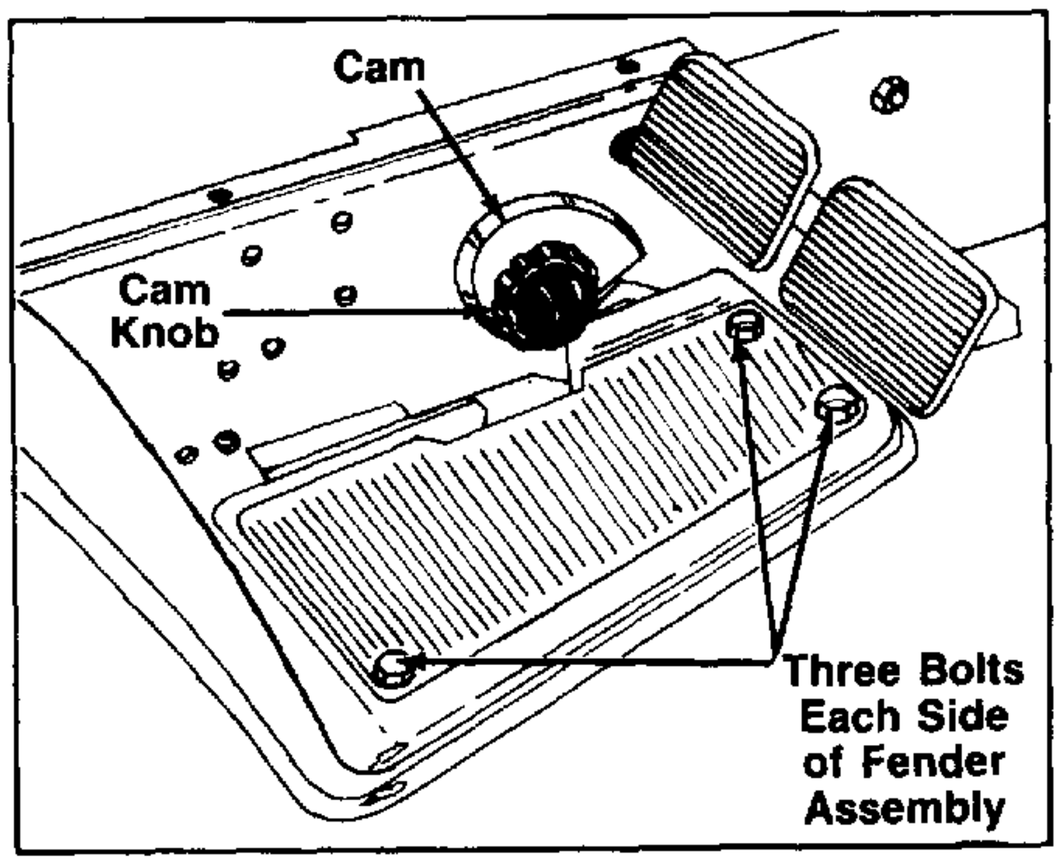

FIGURE 6.

13. Remove the four self-tapping hex bolts holding the center frame cover. See figure 7.

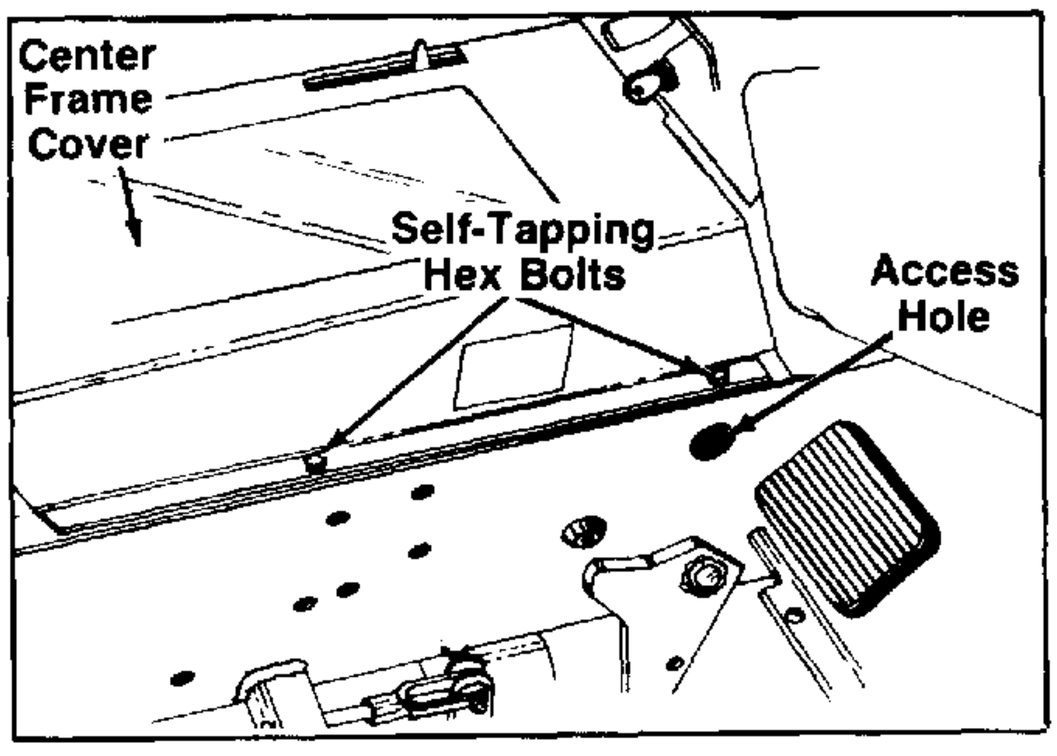

FIGURE 7.

14. Lift off the center frame cover.
15. Unplug taillight leads before lifting off fender.
16. Lift off the fender assembly.

NOTE

Steps 17 and 18 refer to Model 1572 only.

17. On Model 1572 only, remove the old fuel tank.
18. Remove the dipstick first; disconnect the fuel lines. See figure 8.

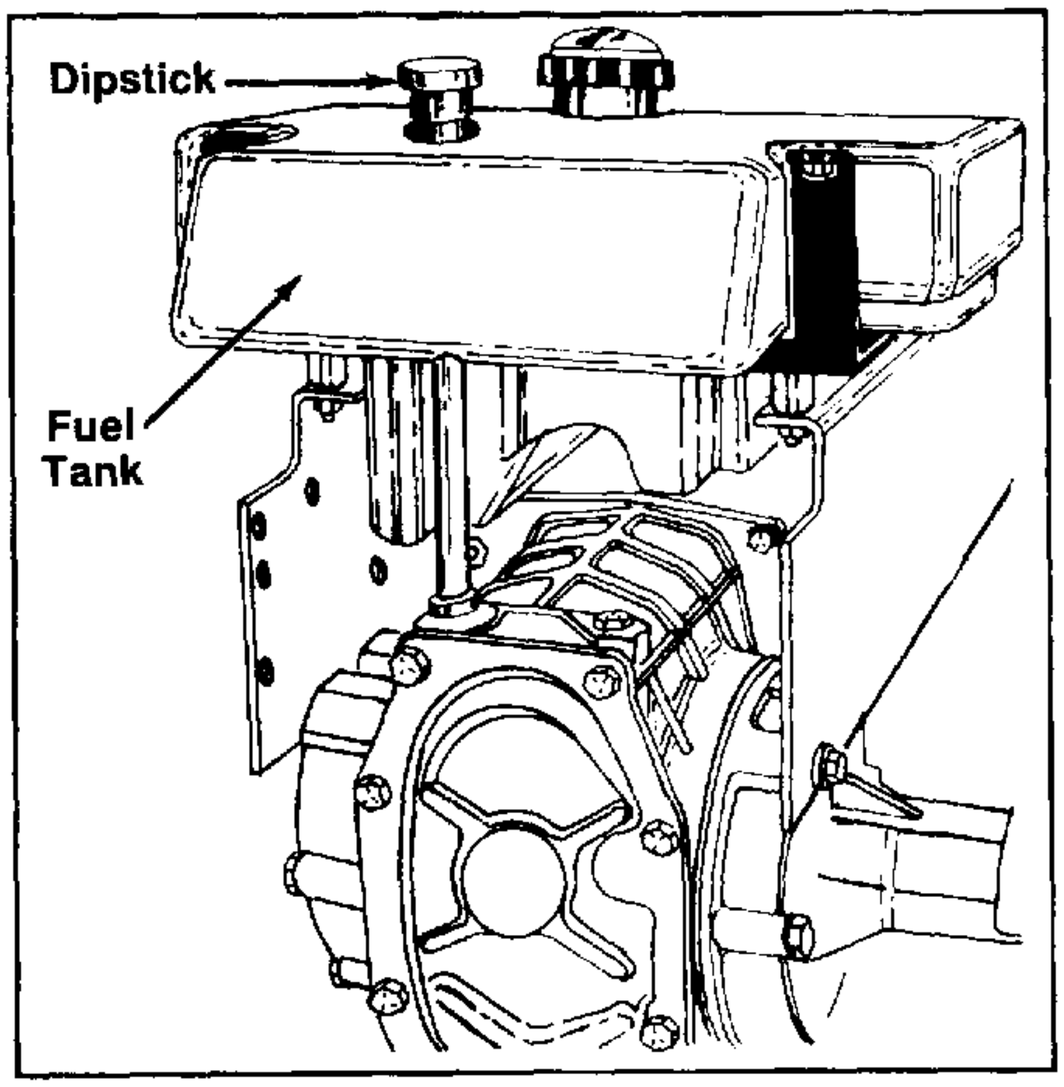

FIGURE 8.

19. Remove the battery tray from the chassis. See figure 9. Remove four hex bolts, three lock washers and one external lock washer.

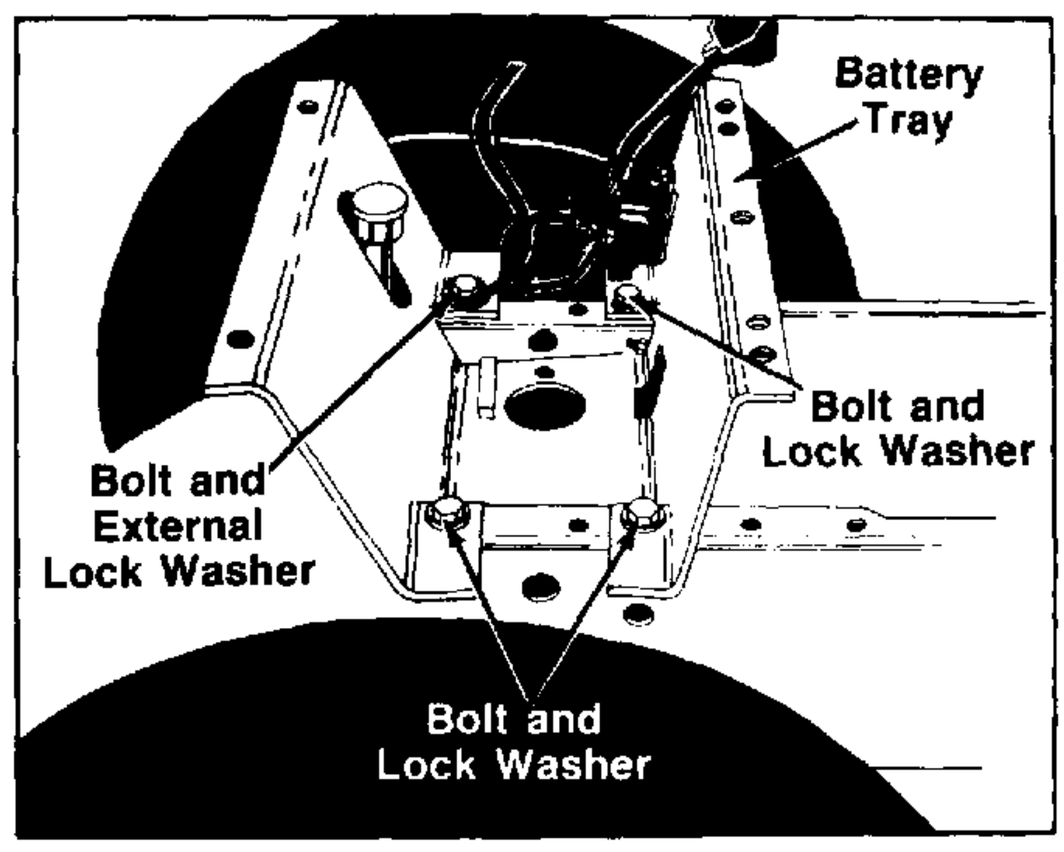

FIGURE 9.

20. Upon reassembly of battery tray **(IN STEP 53)** make certain the battery ground wire is grounded to battery tray properly with external lock washer. See figure 10.

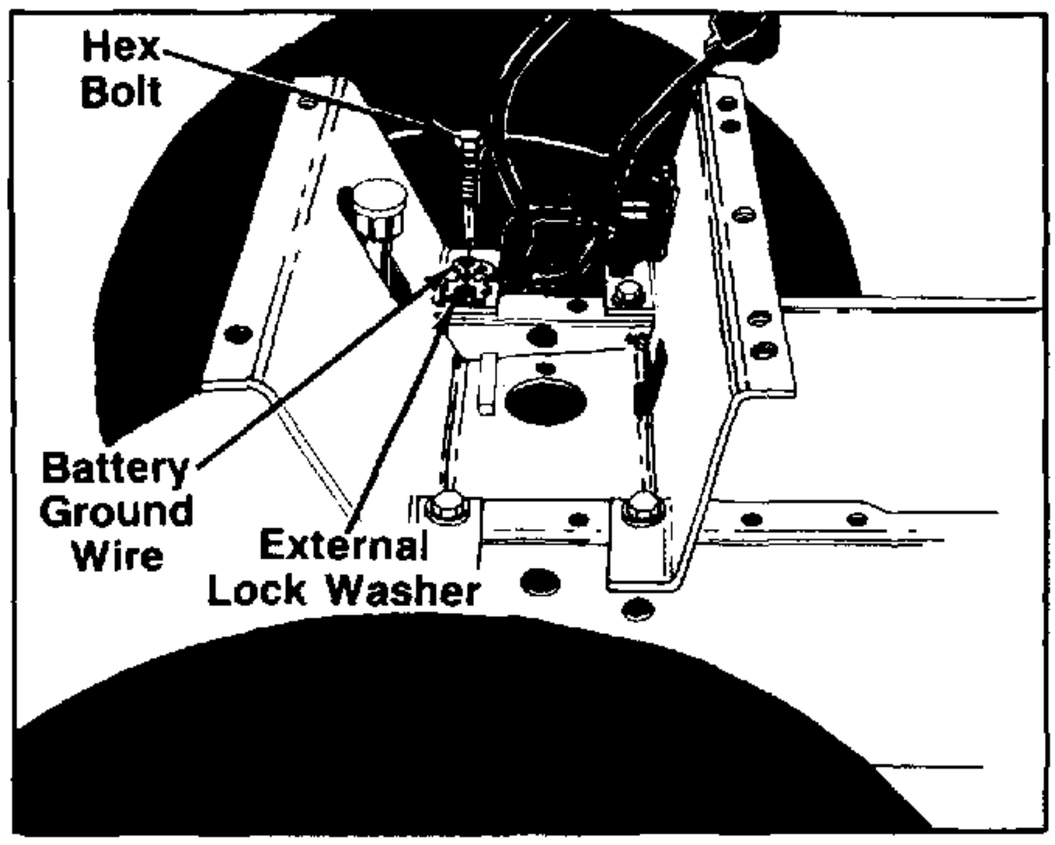

FIGURE 10.

NOTE: You will now have to drain the rear axle, use sufficent pan to catch transmission fluid for reuse.

21. Remove five bolts and lock washers holding the draw bar, discard draw bar and bolts; save the lock washers for reassembly. See figure 11.

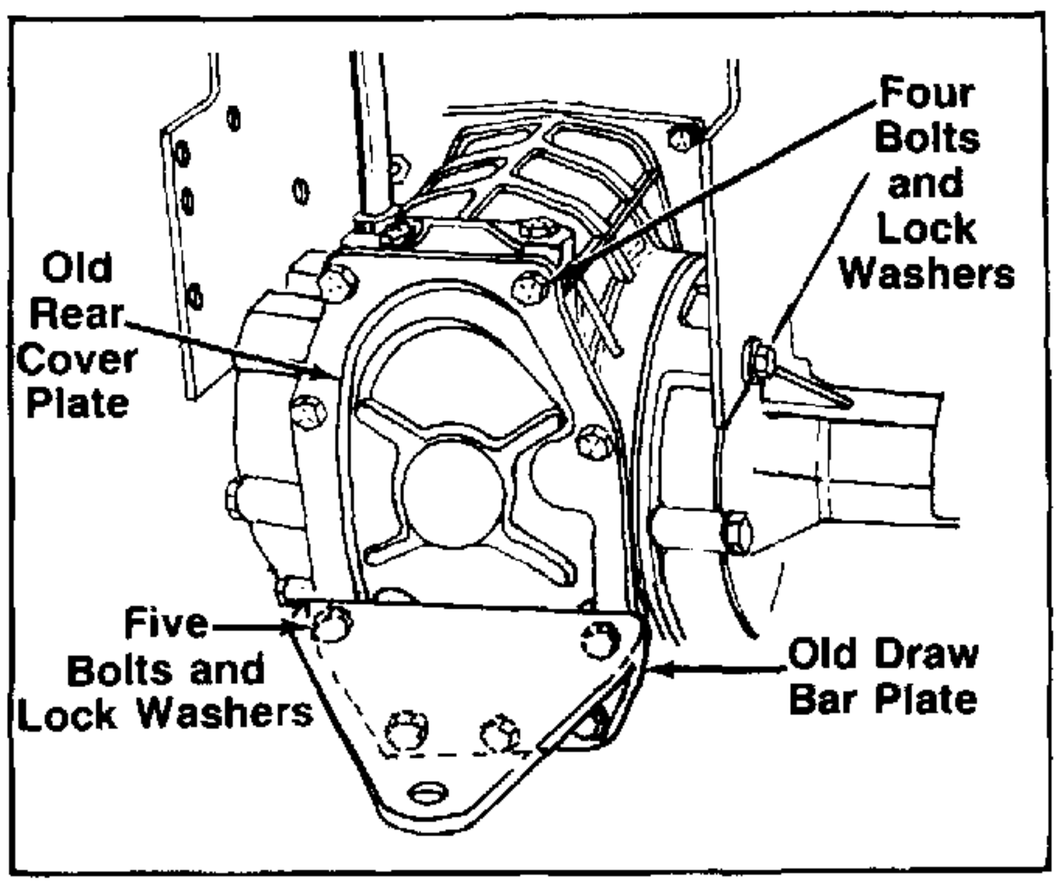

FIGURE 11.

22. Remove the four bolts and lock washers holding the rear cover plate. Discard rear cover plate and gasket. Retain the bolts and lock washers for reassembly of new rear cover plate. See figure 11.

23. Install new rear cover plate assembly (Ref. 20) and rear cover plate gasket (Ref. 21), to the transmission housing using the four bolts and lock washers removed in step 22. See figure 12.

24. Install new draw bar plate (Ref. 8) to rear cover using the five lock washers from step 21, two hex patch bolts (Ref. AD) and three longer hex patch bolts (Ref. AC). See figure 12.

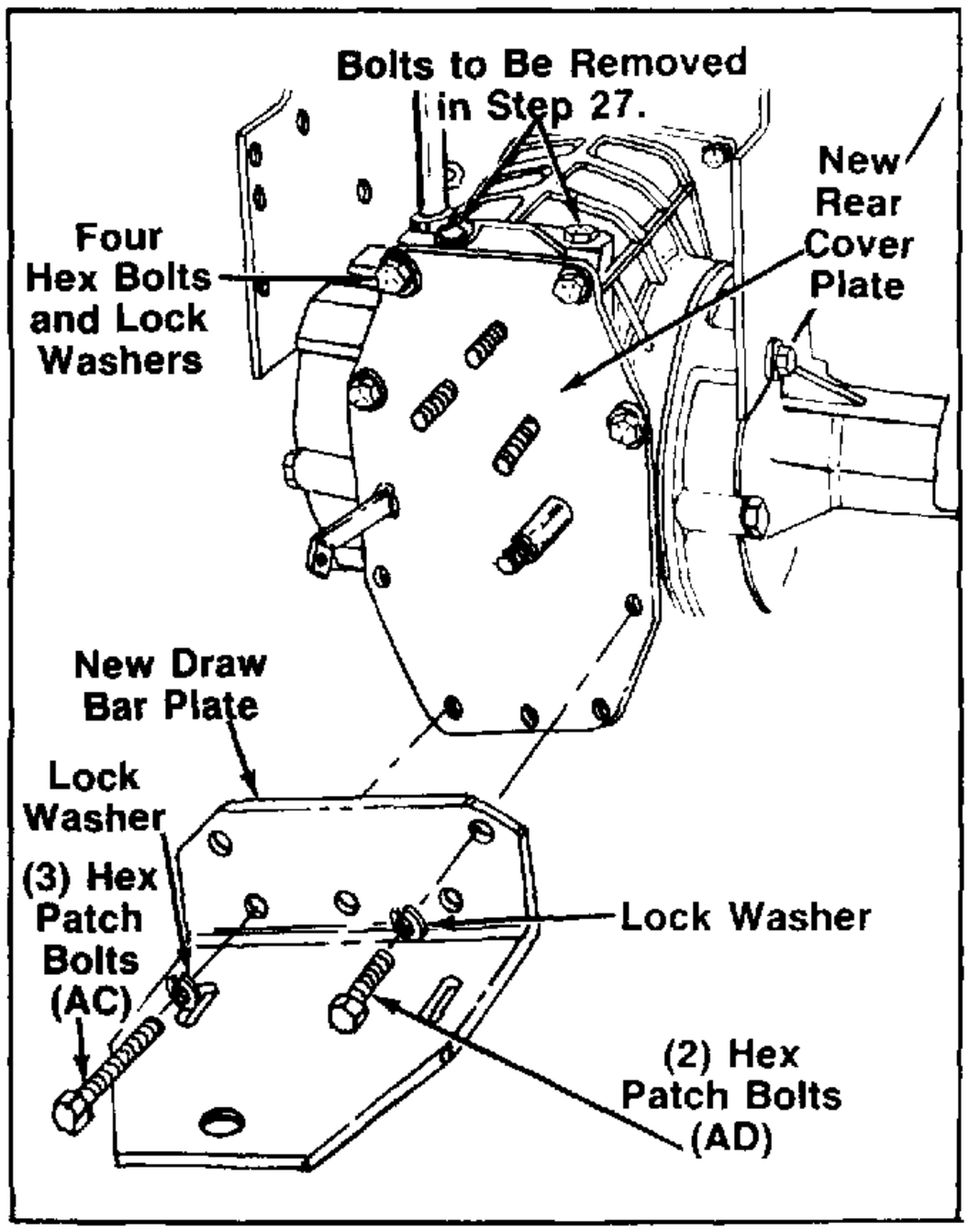

FIGURE 12.

25. Remove existing bolts (A) (3 each side) and wave washers from horn assembly on rear axle. See figure 14. Retain wave washers and discard bolts.

CARRIER HARDWARE

A. = Patch bolt 3/8-16 x 4" Lg., Grade 5, and lock washer 3/8" I.D. See figures 13 and 14.

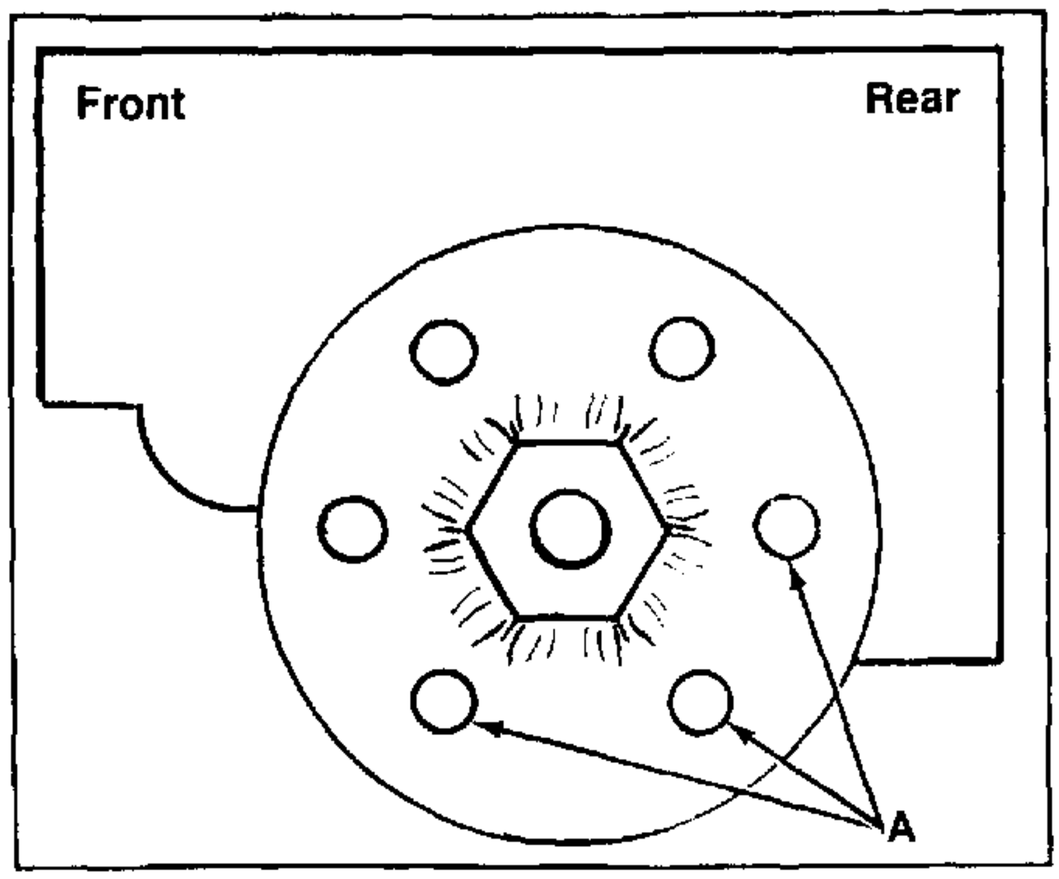

FIGURE 13.

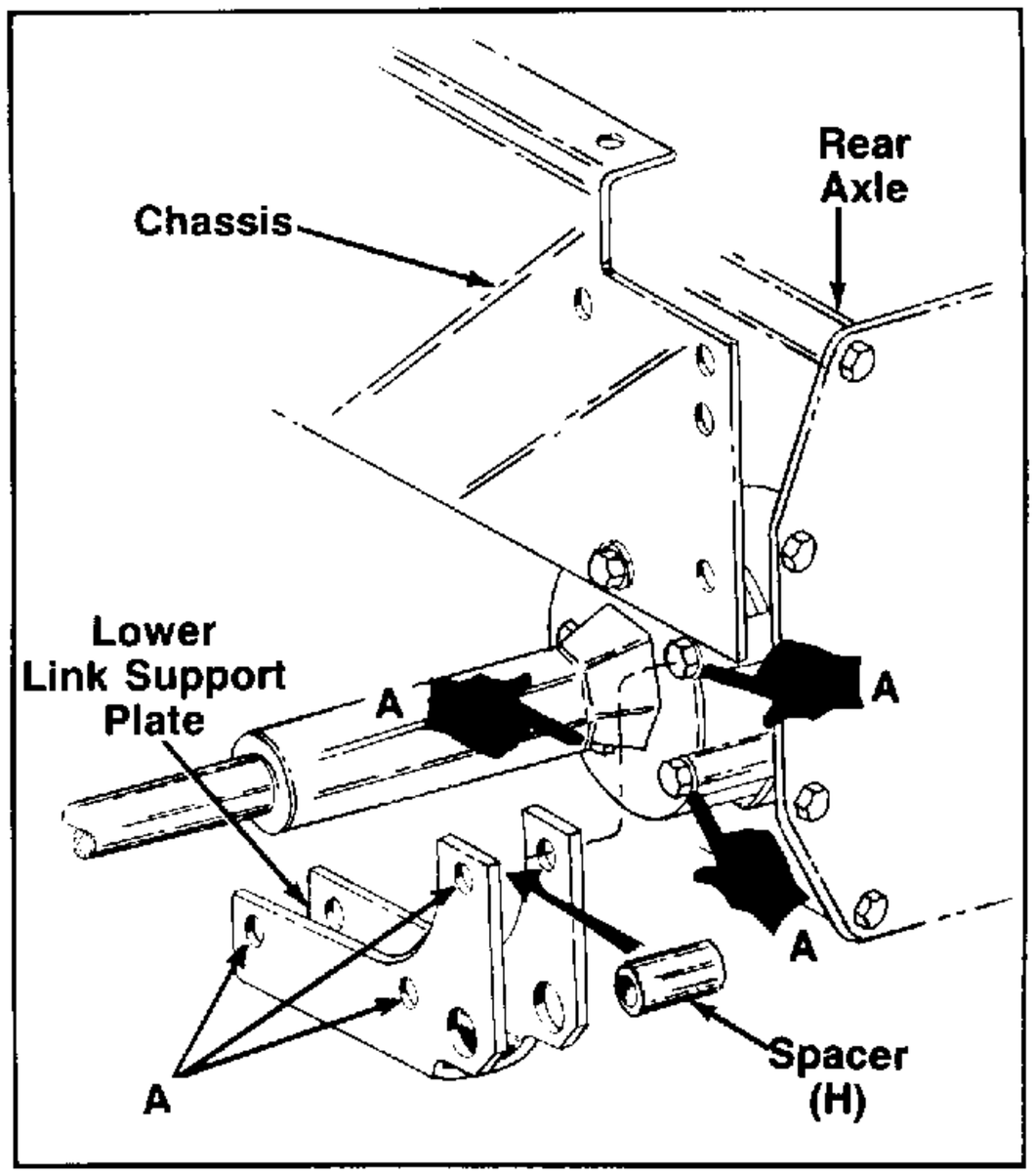

FIGURE 14.

26. Attach lower link support plates, spacer bushing (H), wave washers (removed in step 25) and three hex bolts (A) to axle housings. See figures 15 and 16.

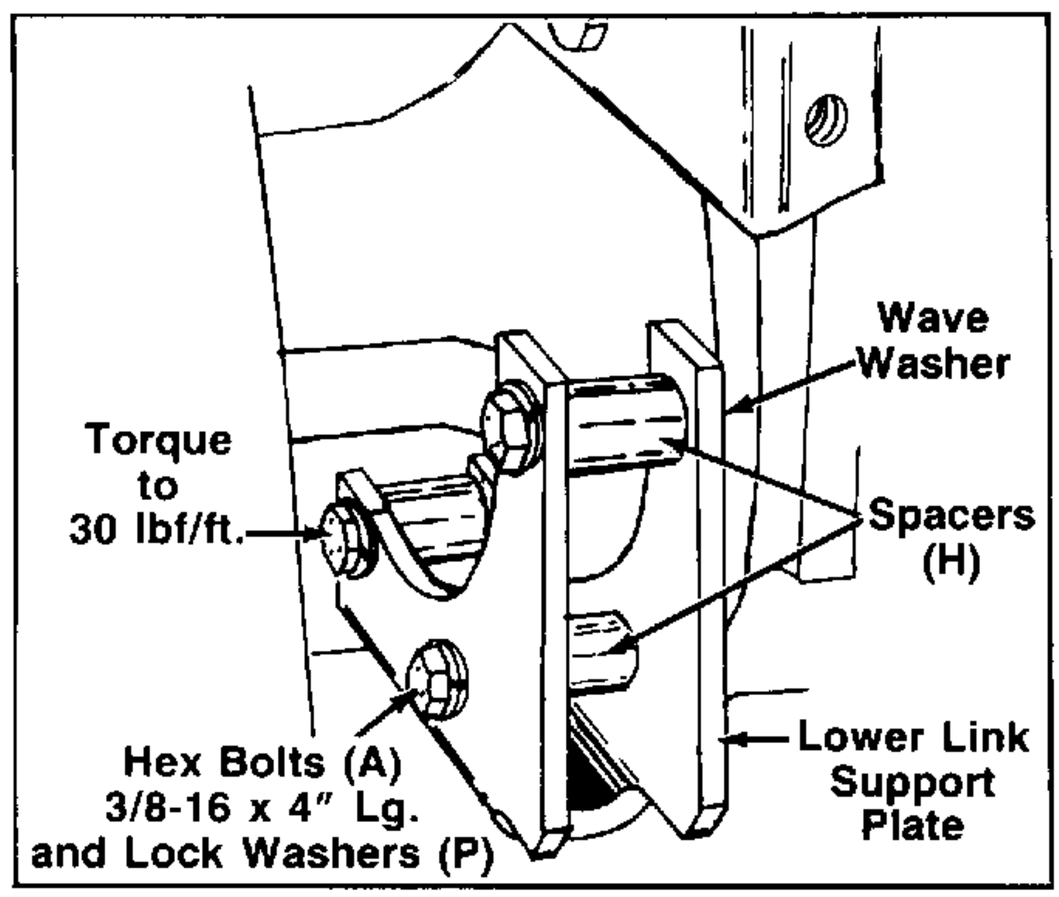

FIGURE 15.—Left Hand Side

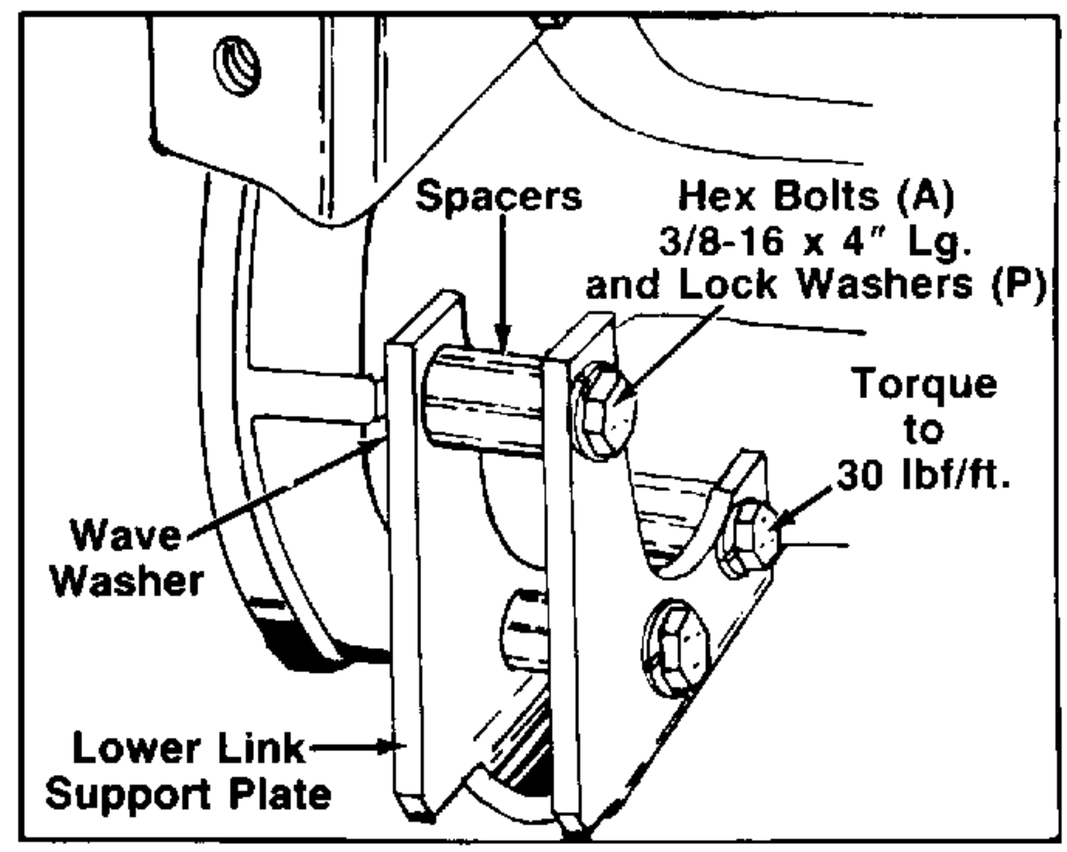

FIGURE 16.—Right Hand Side

27. Remove two bolts from the top of the transmission case as shown in figure 12.

28. Install the rear P.T.O. clutch shaft, slide splined end over shaft on hydrostatic pump and using hex bolts (AB), (AC) and lock washers (AN) secure to top of transmission case. See figures 17 and 18.

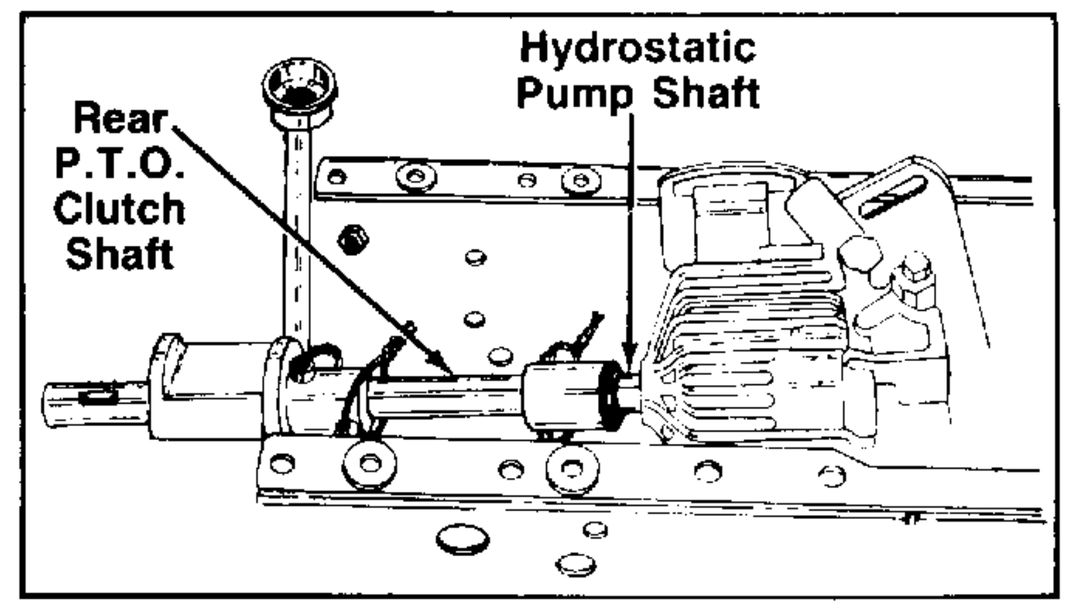

FIGURE 17.

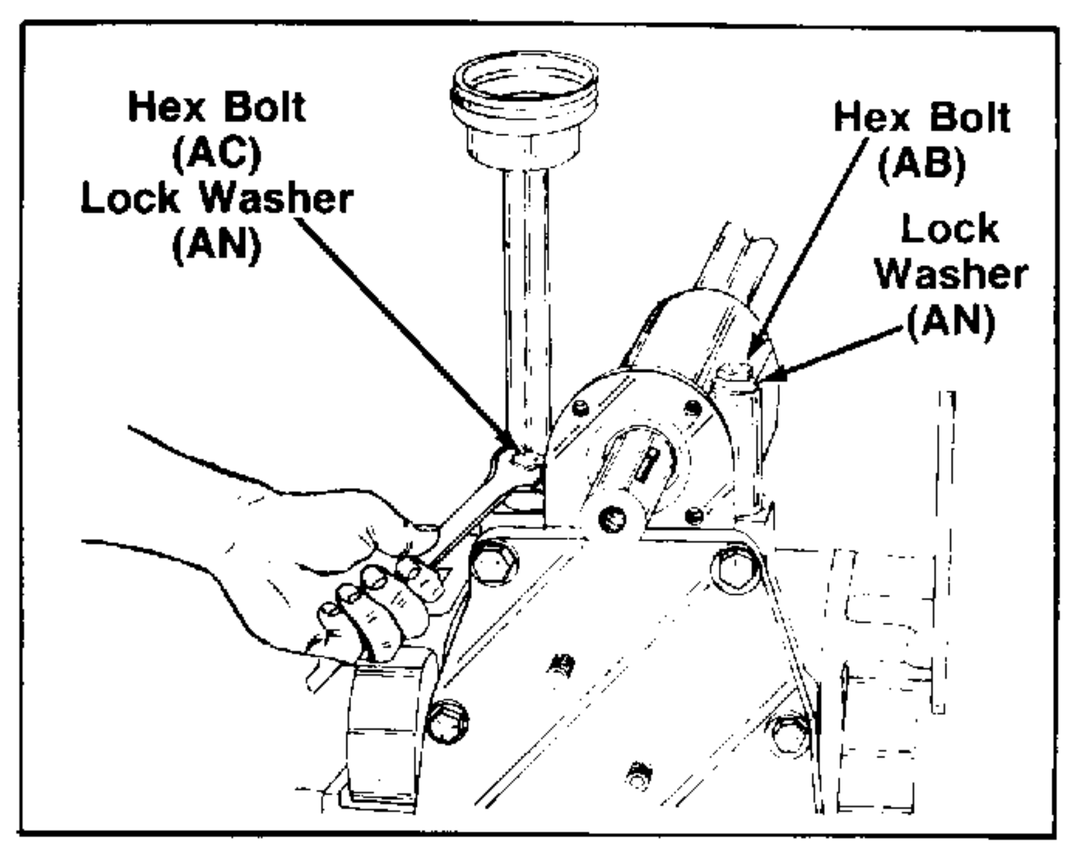

FIGURE 18.

29. Install the rockshaft and support plates to rear chassis by first removing one bolt (each side of chassis to transaxle horn). Assemble with hardware provided as shown in figure 19 and 20.

Torque 7/16-inch bolts 53-60 lbf. ft., torque 3/8-inch bolts 35-40 lbf. ft.

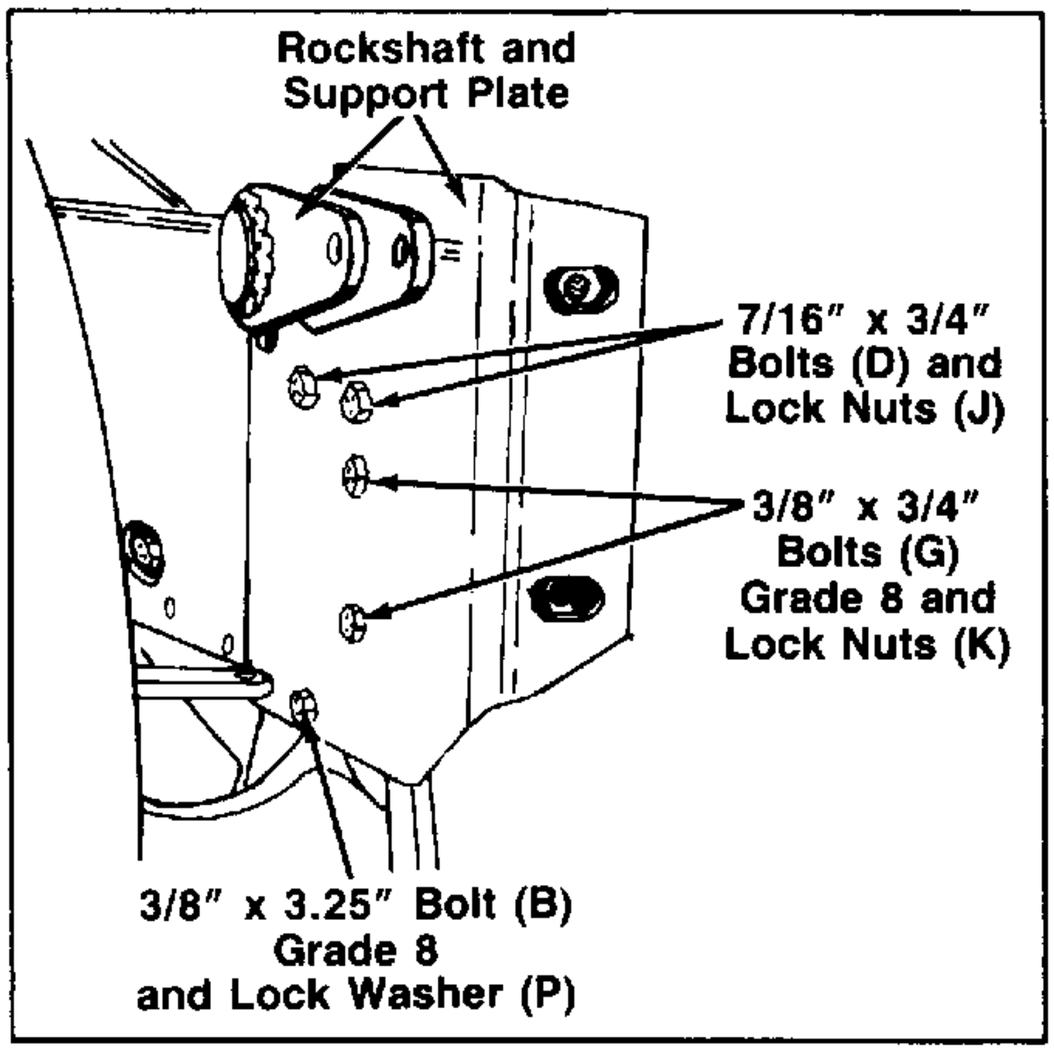

FIGURE 19.—Left Hand Side

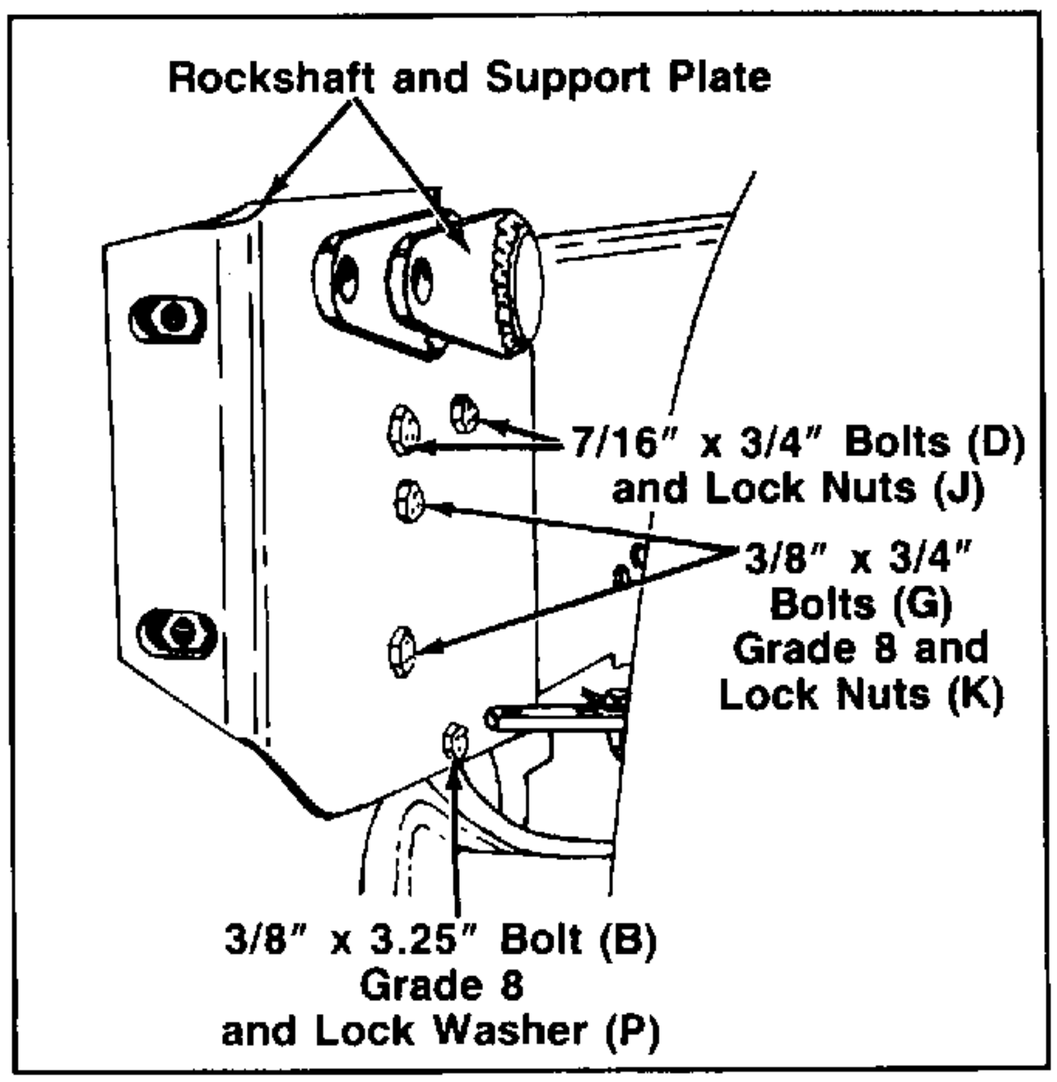

FIGURE 20.—Right Hand Side

30. Remove headed pin ½" x 1.50" through access hole in frame and attach the implement lift bar to hydraulic lift clevis assembly. See figure 21.

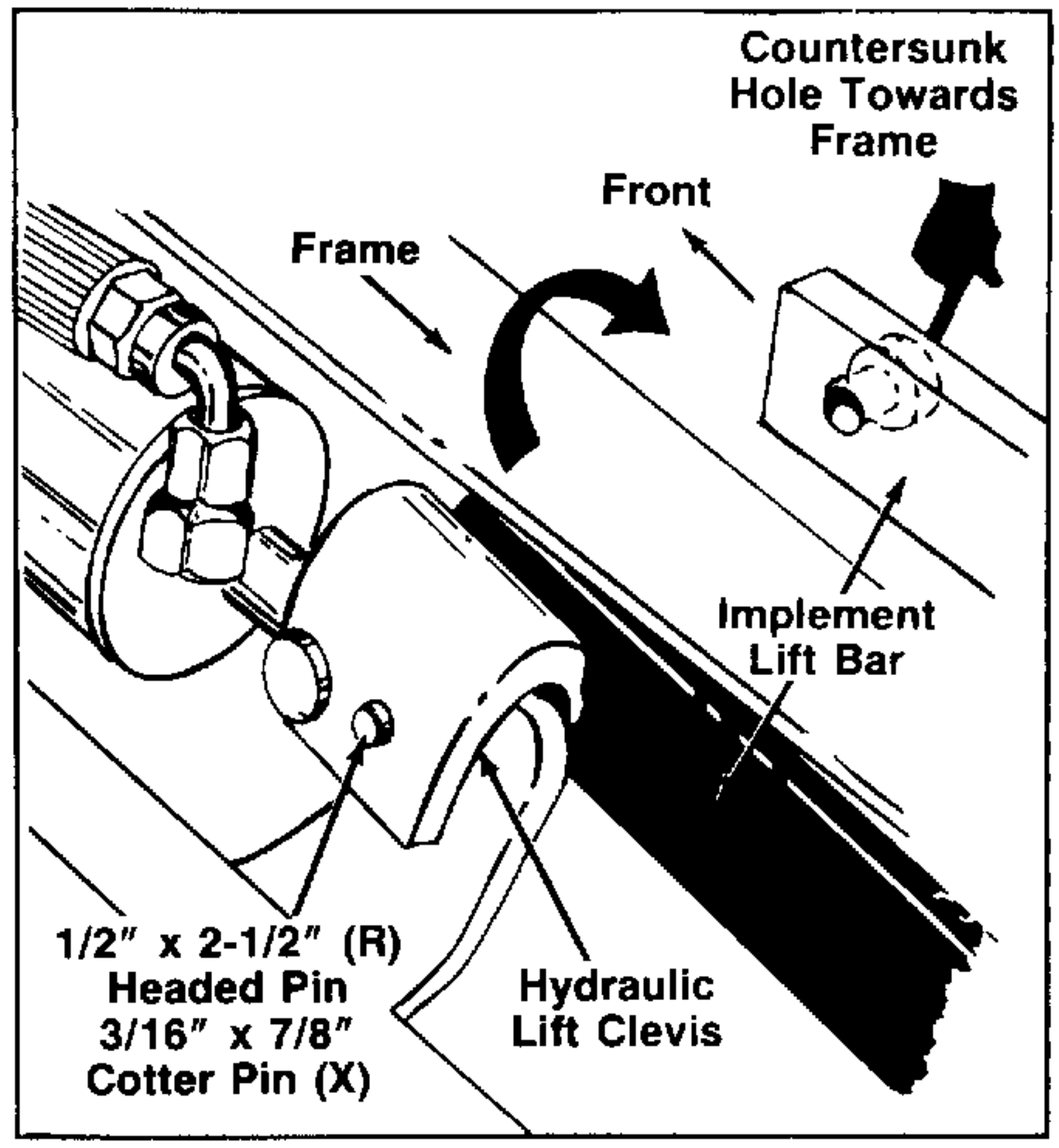

FIGURE 21.

31. Assemble the other end of implement lift bar to rockshaft with straight clevis pin (U) (no head) and roll pin (Z). See figure 22.

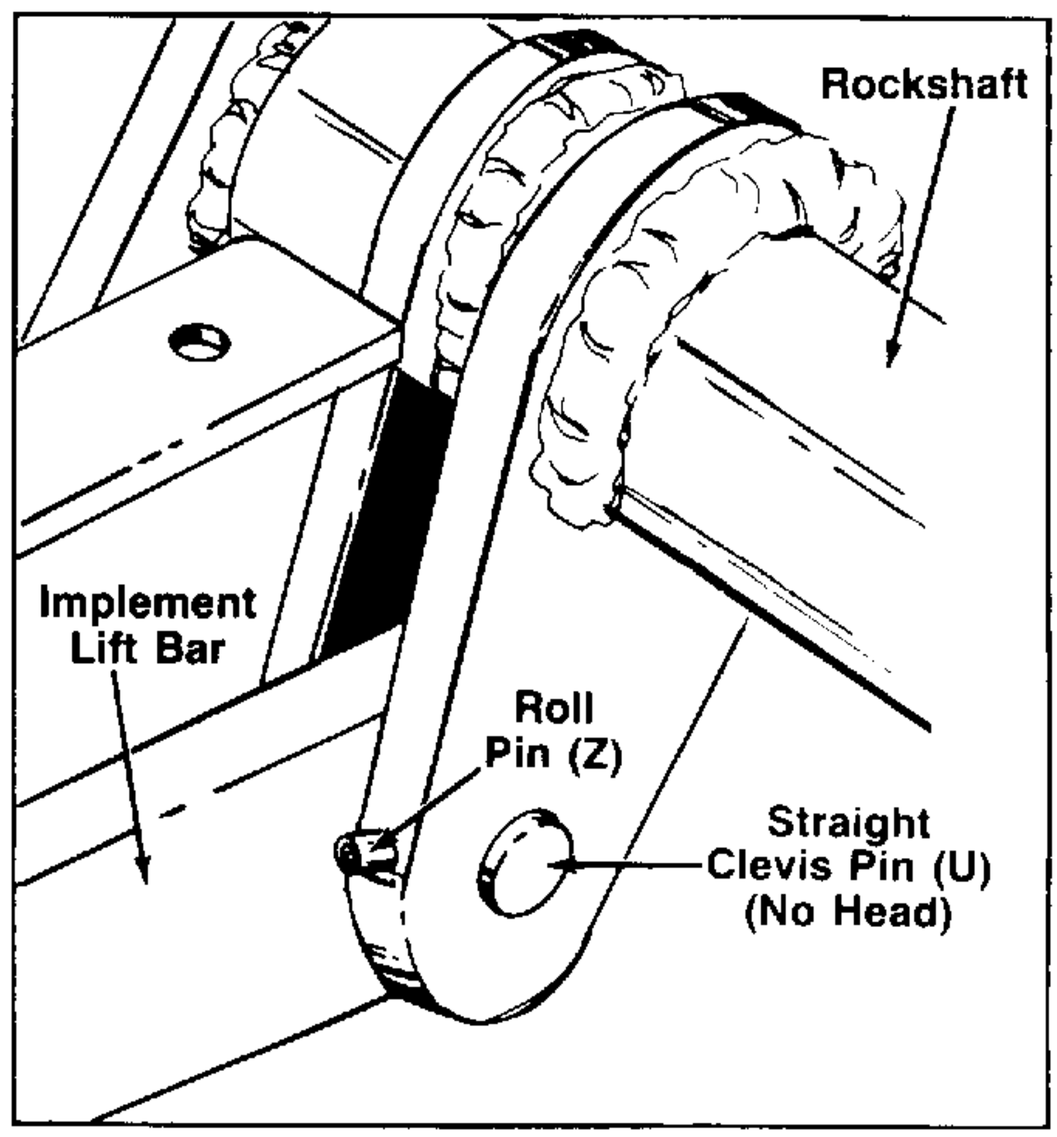

FIGURE 22.

32. Slide spacer (AH) onto center shoulder bolt, lubricate with 251 HEP grease or equivalent. See figure 23.

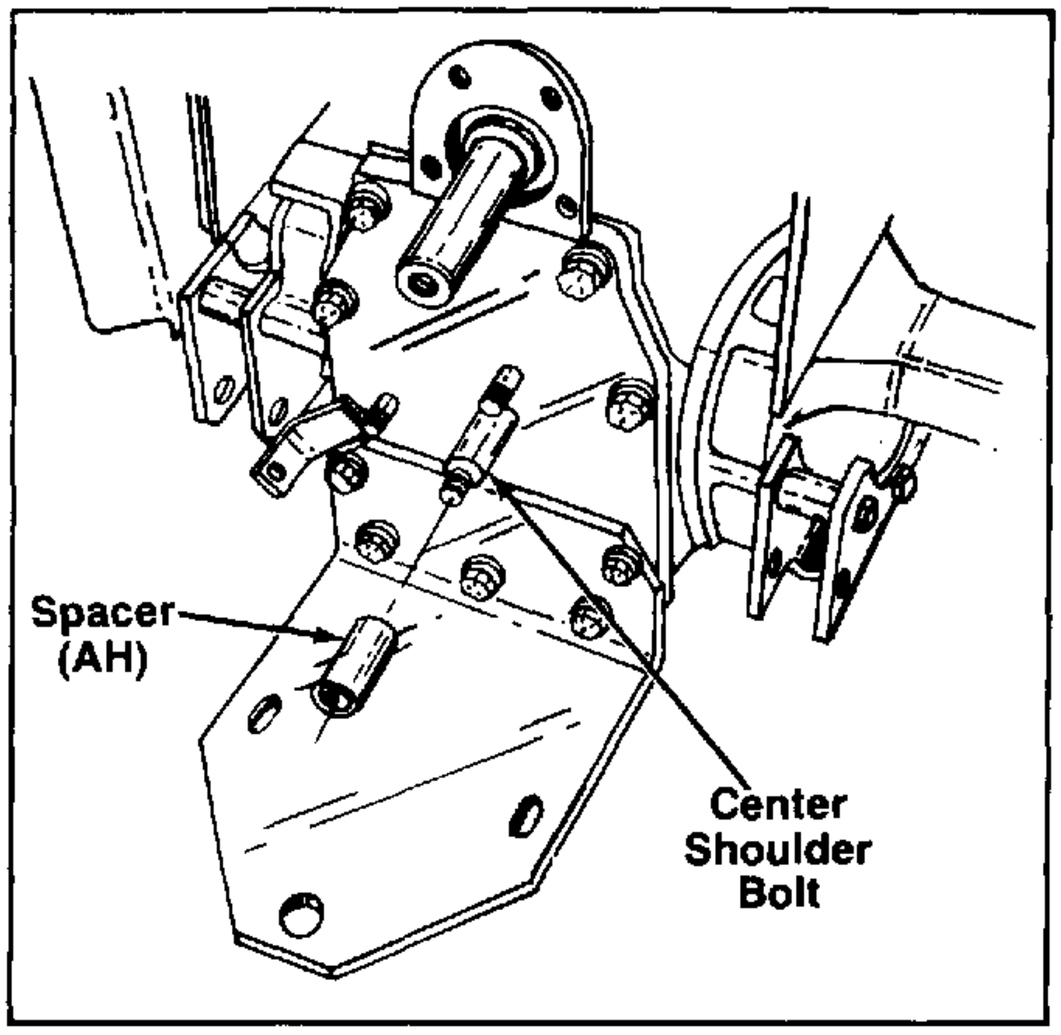

FIGURE 23.

33. Grease idler bracket assembly (18) hub before sliding over spacer (AH) using 251 HEP grease and secure with center lock nut (AM) and flat washer (AO). See figure 24.

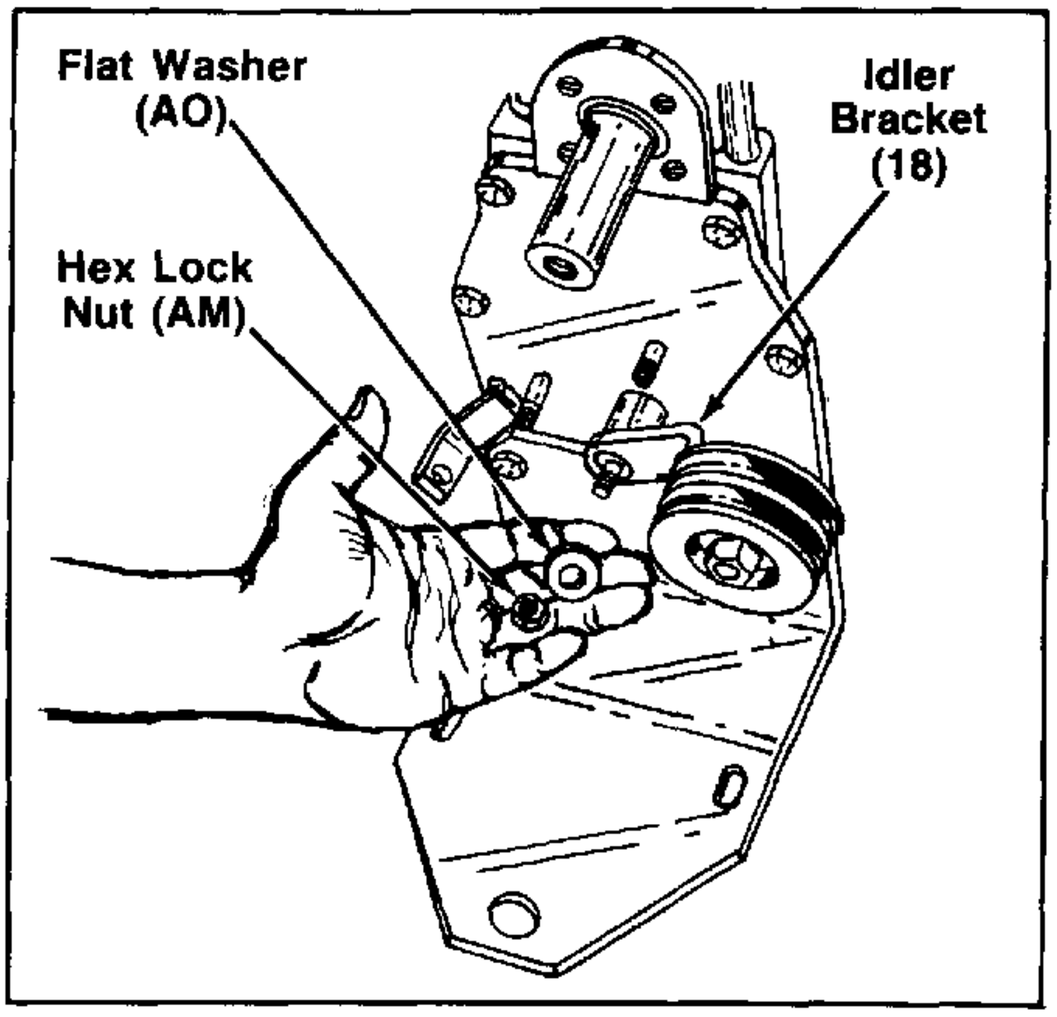

FIGURE 24.

34. Grease rear P.T.O. clutch shaft with 251 HEP grease or equivalent, then slide spacer (AJ) onto shaft and insert woodruff key (AE). See figure 25.

NOTE: Seat key in shaft by tapping it in, using a rawhide or plastic mallet, block of wood, etc.

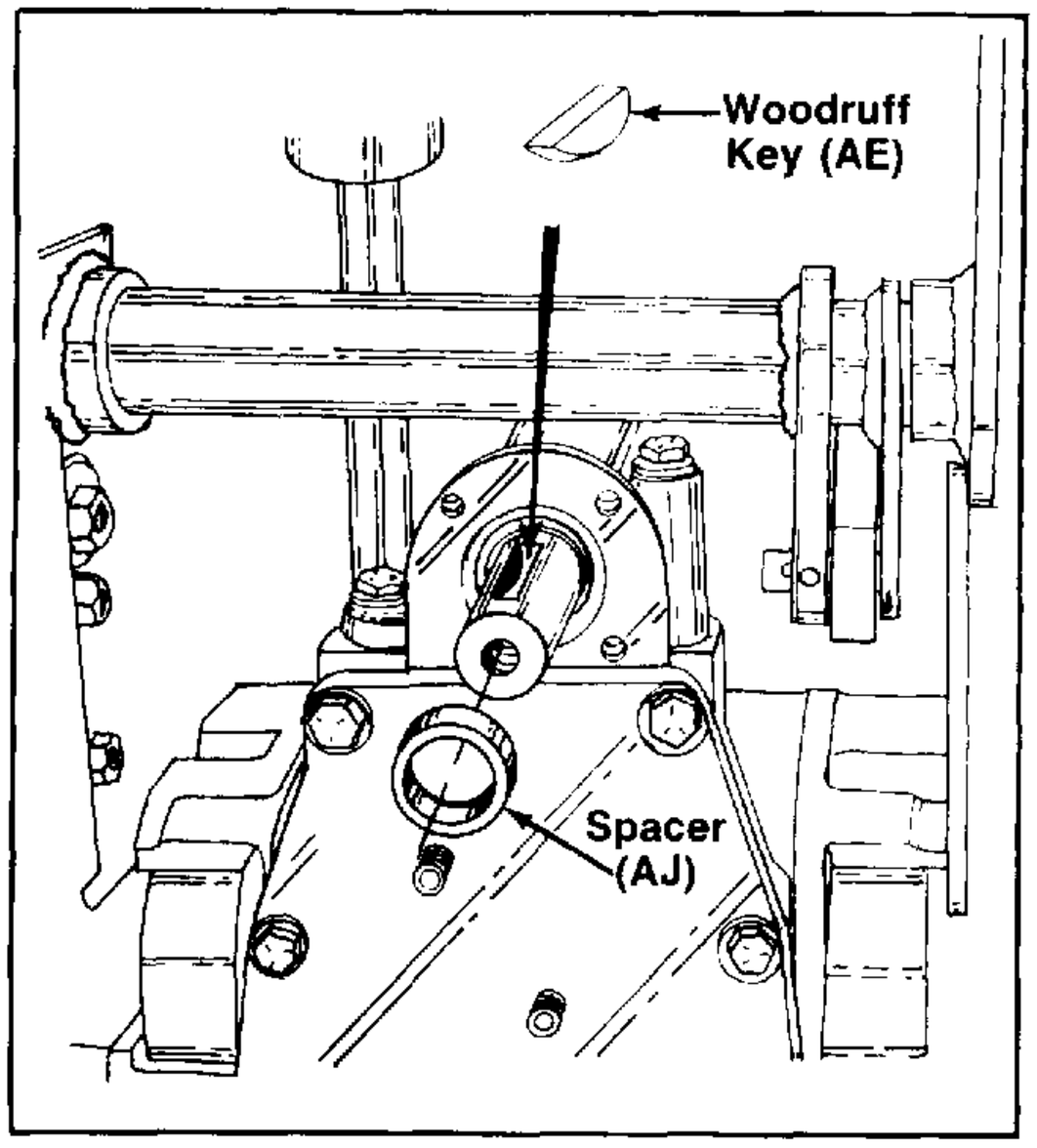

FIGURE 25.

35. Slide clutch field assembly (14) onto rear P.T.O. clutch shaft with clutch electrical connection on the left hand side and cutout in clutch field to the bottom as shown in figure 26.

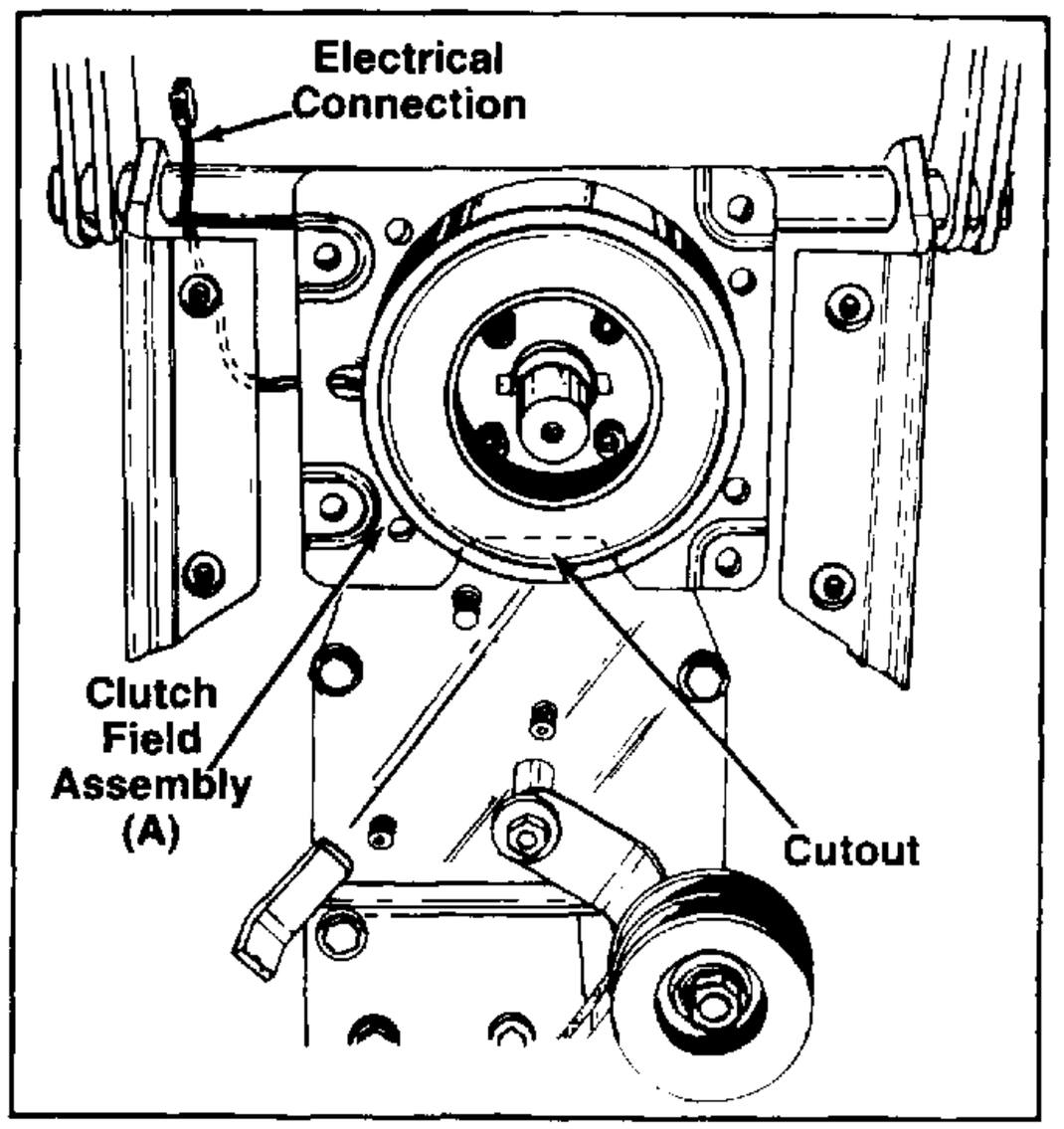

FIGURE 26.

36. Secure clutch field assembly to rear P.T.O. shaft casting with four socket head screws (AG) using an Allen wrench as shown in figure 27.

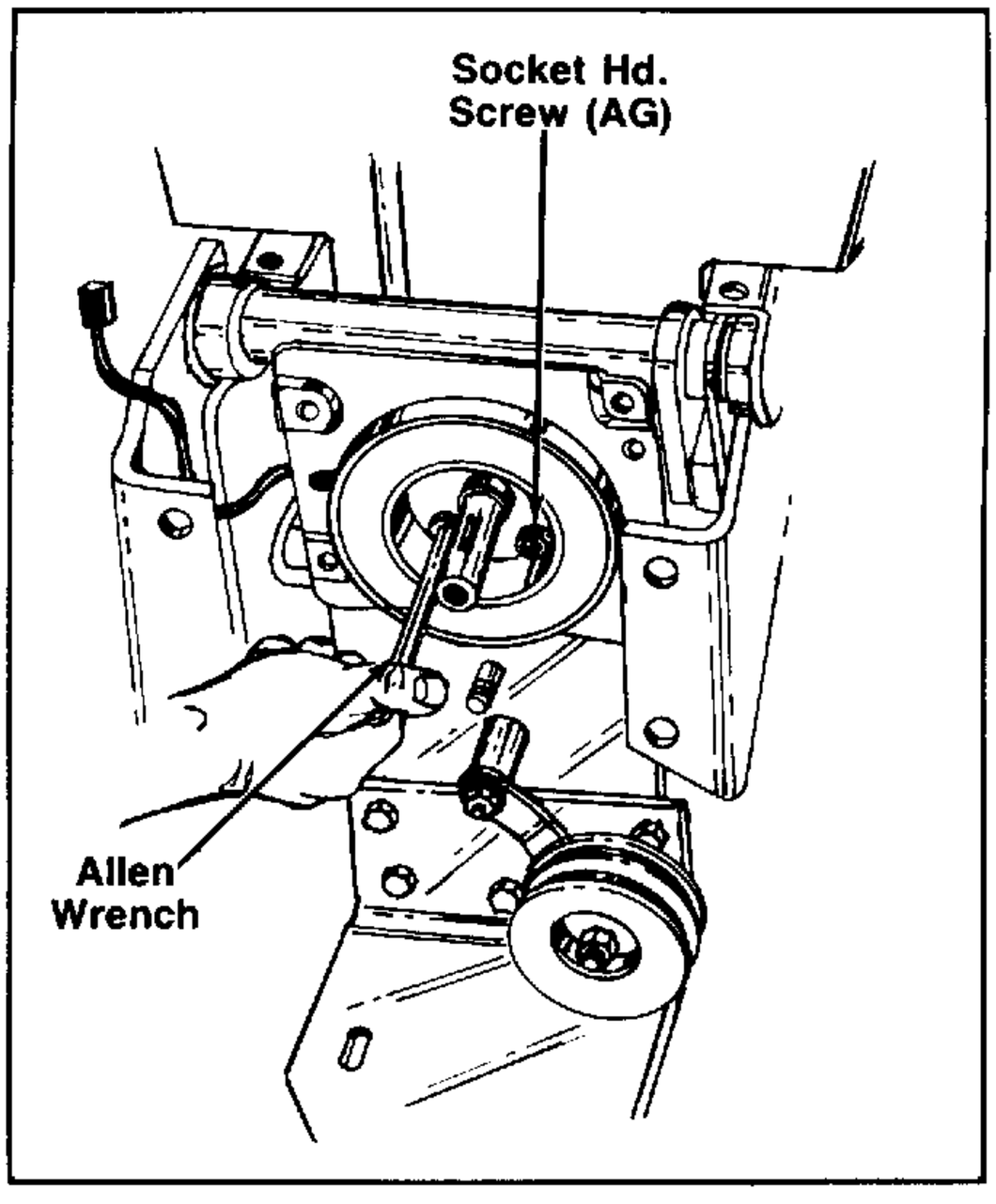

FIGURE 27.

37. Slide clutch rotor (15) onto rear P.T.O. clutch shaft, lining up the woodruff key (AE) with key slot in the clutch rotor and over clutch field assembly. See figure 28.

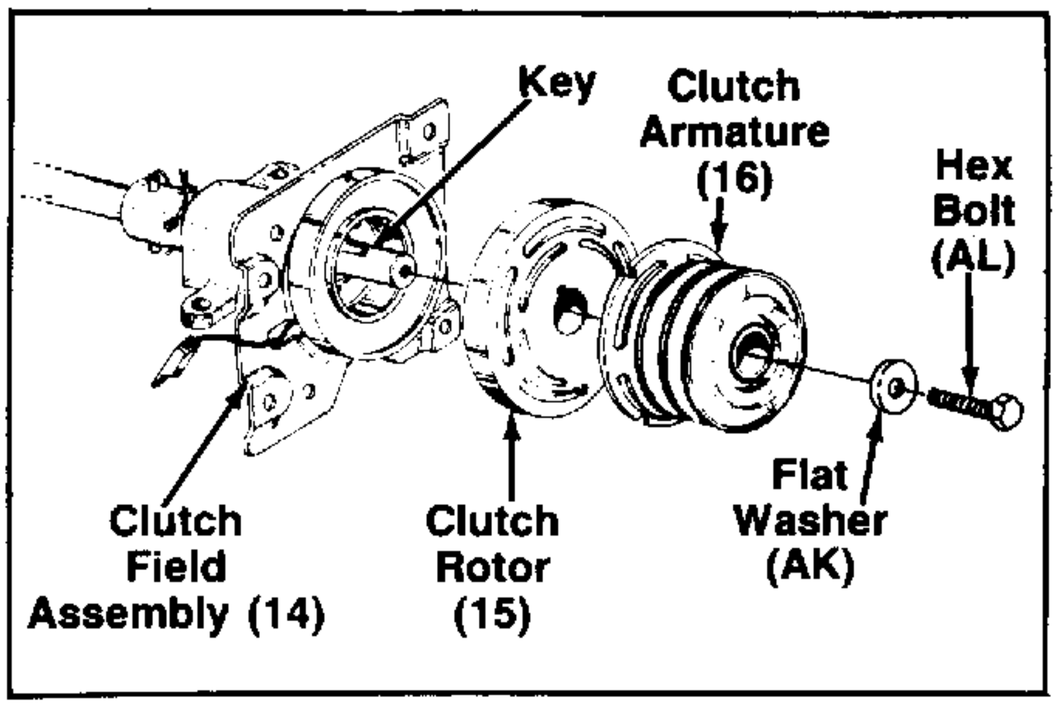

FIGURE 28.

38. Slide clutch armature (16) over rear P.T.O. clutch shaft and secure with large flat washer (AK) and hex bolt (AL). See figure 28. **NOTE: Use loctite on hex bolt (AL) prior to assembly.**

39. Slide the double pulley and casting assembly (19) onto studs in rear cover plate and secure with three hex center lock nuts (AM) using a socket head wrench through the access holes in the double pulley. See figures 29 and 30.

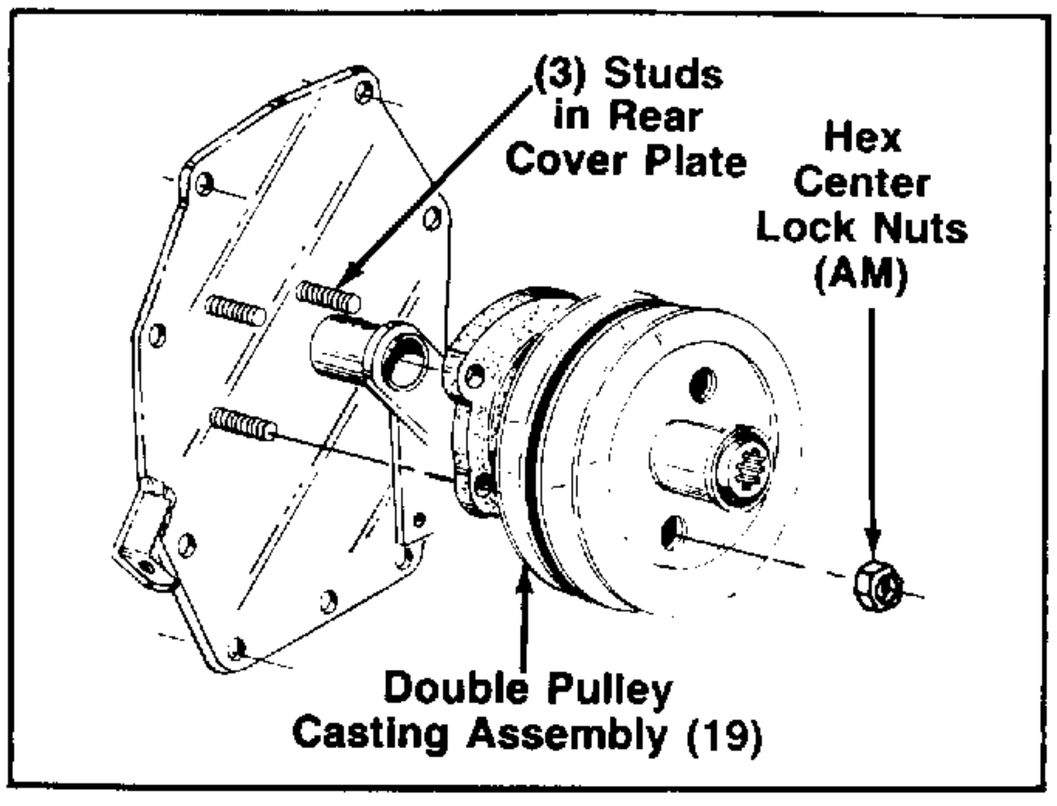

FIGURE 29.

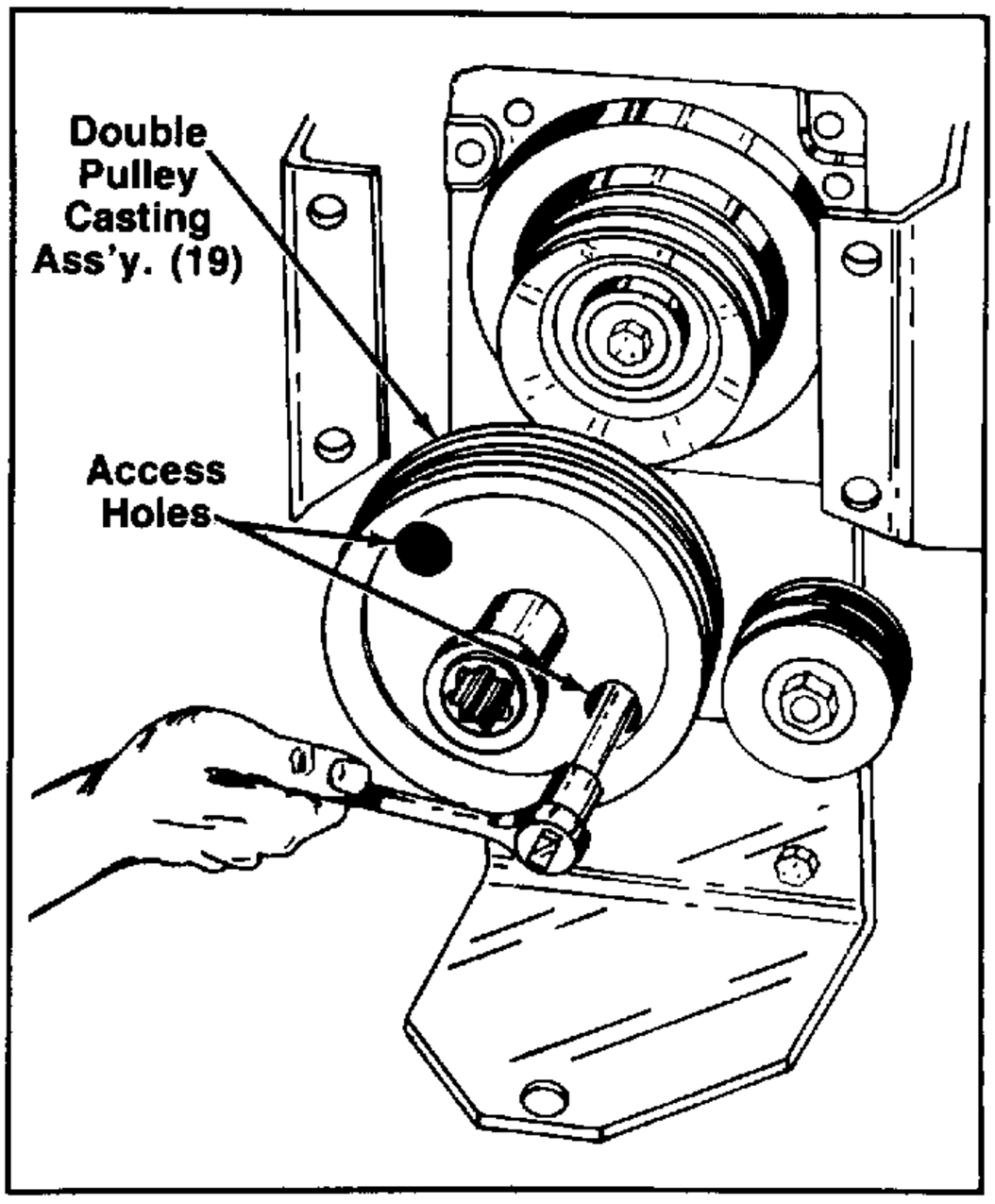

FIGURE 30.

40. Install matched set of belts (17) onto pulleys as shown in figure 31.

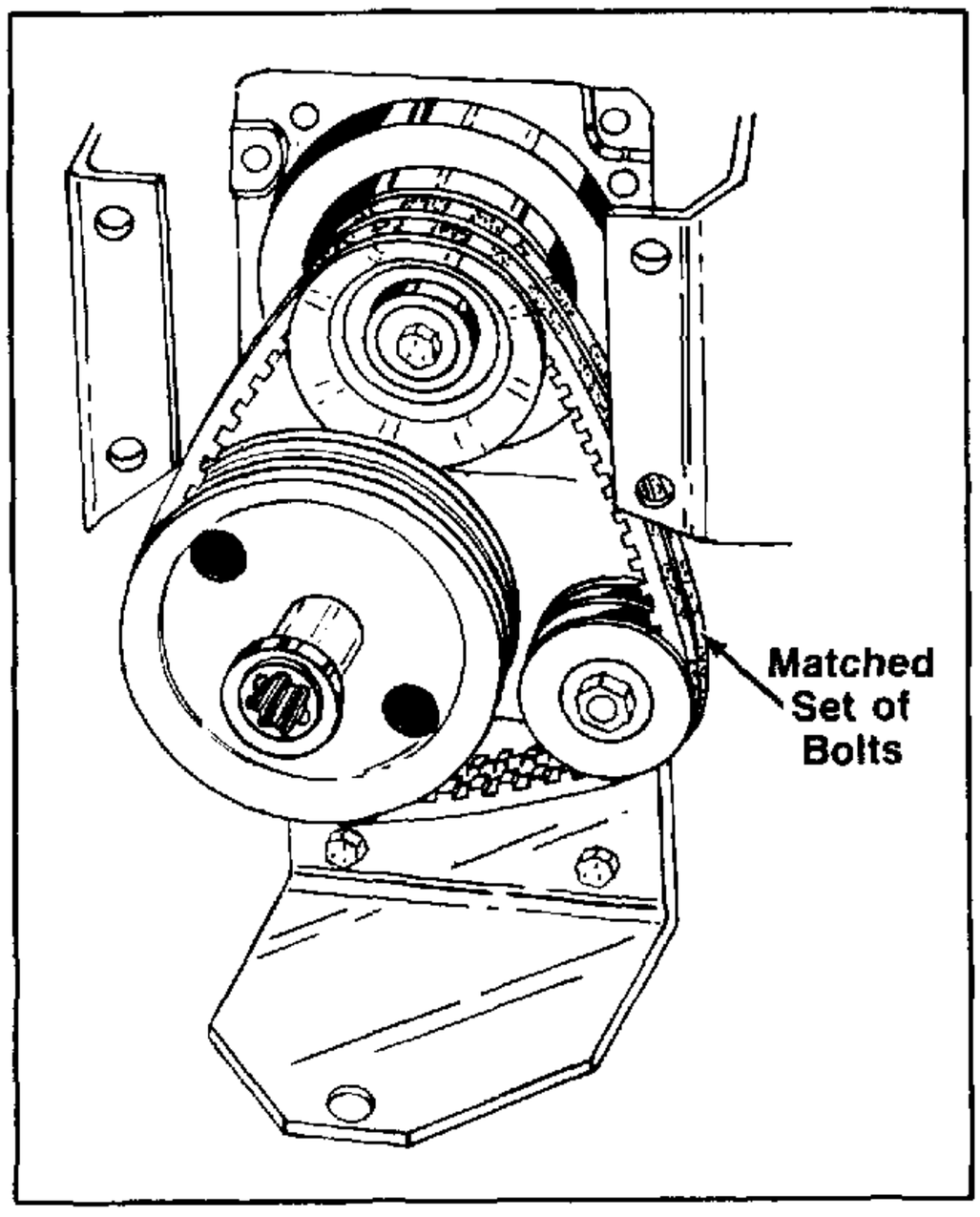

FIGURE 31.

41. Hook closed end of extension spring (AF) to welded tab on idler bracket assembly (18), using a suitable tool. Hook the other end of the spring to the tab on the rear cover plate. See figure 32.

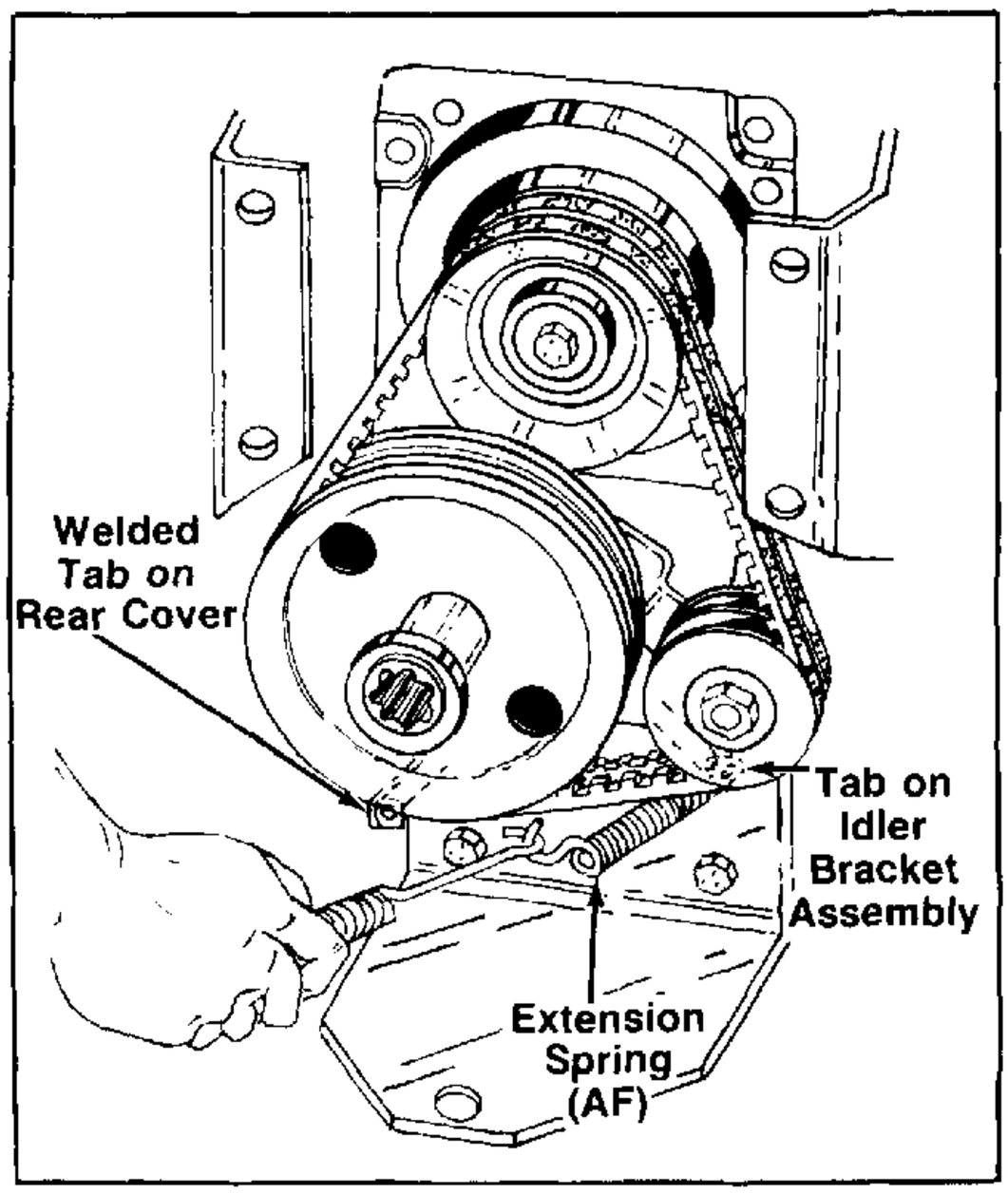

FIGURE 32.

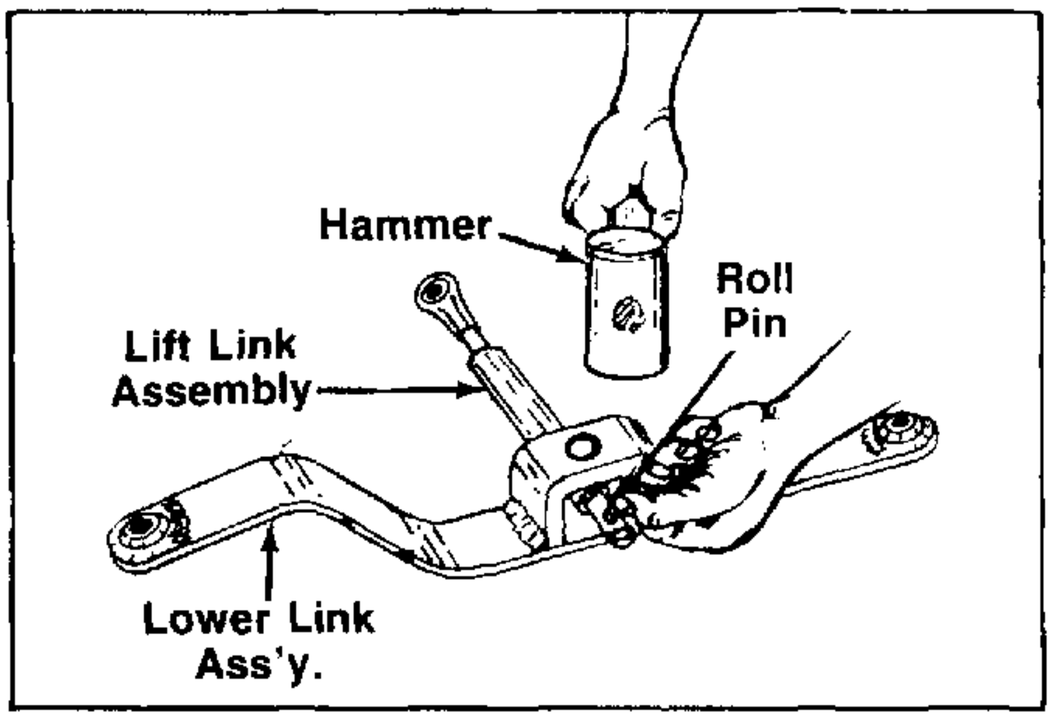

FIGURE 33.

42. Install the lift link assemblies into the lower link assemblies and secure with ¼″ x 1½″ roll pins (Y). See figure 33.

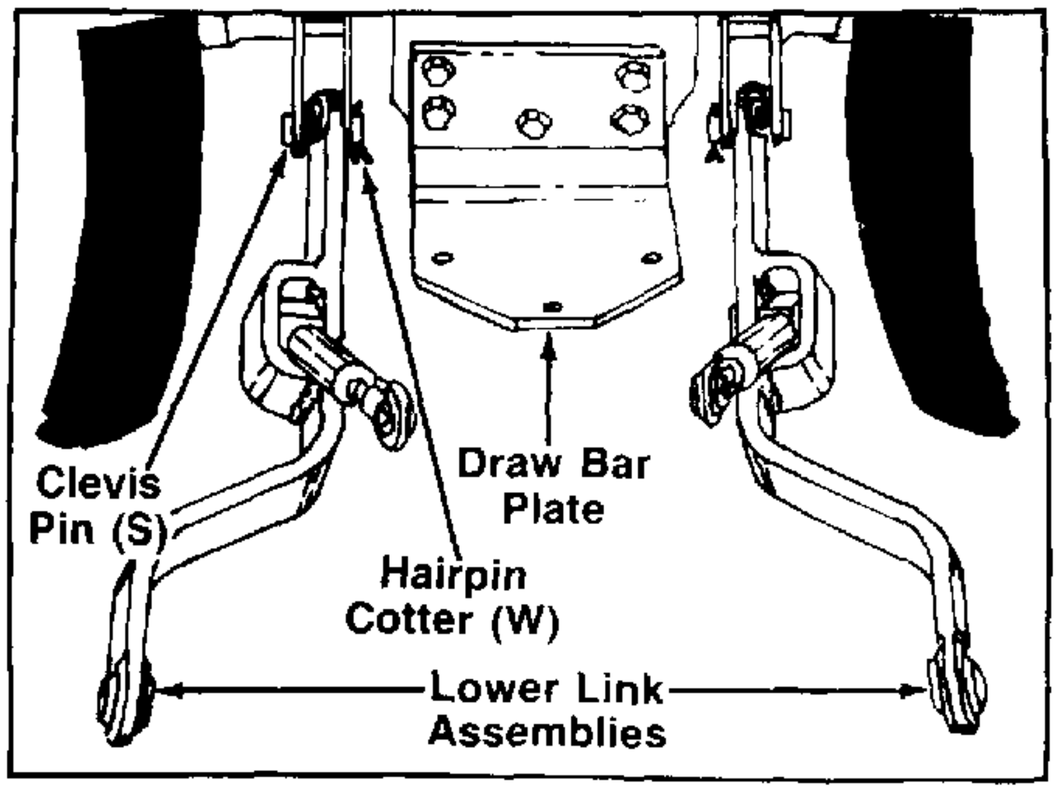

43. Assemble the two lower link assemblies to the lower support plates with clevis pins (S) and hairpin cotters (W). See figure 34.
44. Assemble the lift links to the rockshaft, using hex bolts (C) ½ x 1¾″ long and hex lock nuts (I). See figure 35.

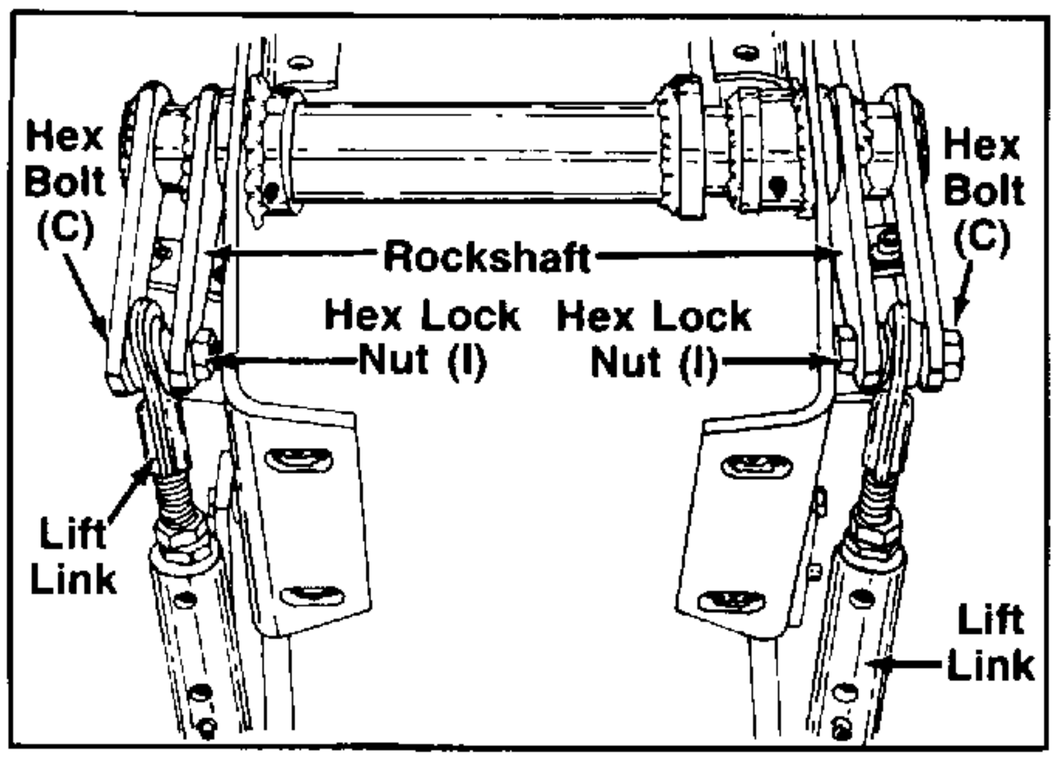

FIGURE 35.

45. Assemble the draw bar support plate to the rockshaft support plates, with two hex bolts (F) 3/8" x 1" long and lock washers (P). Use top hole only. See figure 36.
46. Place the cam sway limiters in position as shown in figure 36. Secure the top holes with 3/8" x 1¼" bolts (E) and the bottom holes with 3/8" x 1" bolts (F). See figure 36.
47. Secure the draw bar support plate to the draw bar plate, with two hex bolts (F) (3/8" x 1" lg.) under draw bar. See figure 36.

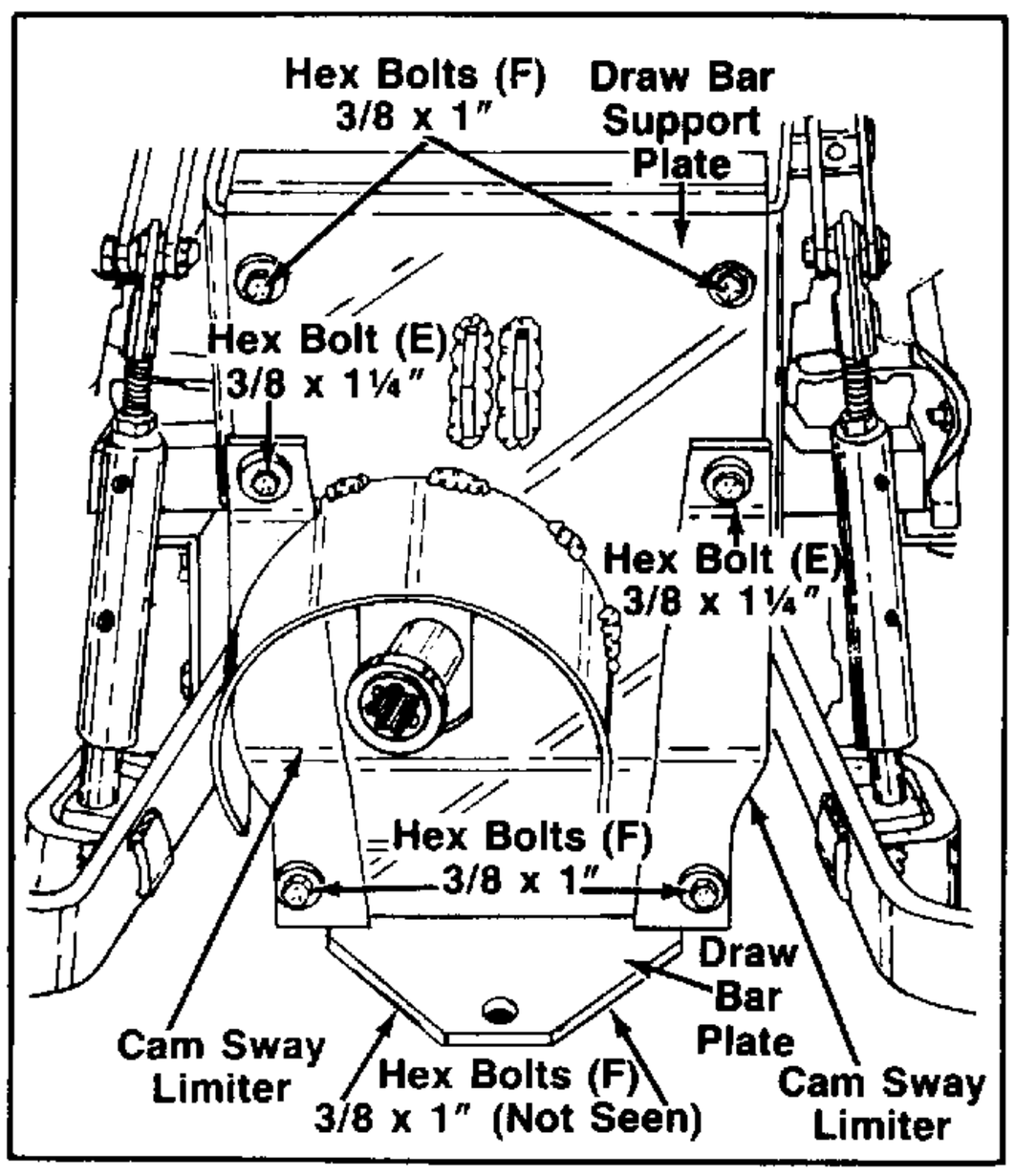

FIGURE 36.

48. Attach upper link storage bail to draw bar support plate. Use 3/8 x 1" bolt (F), flat washer (N), lock washer (P) and hex nut (L). See figure 37.

49. Attach upper link to draw bar support plate at the upper link clevis plate. See figure 37. Secure with clevis pin (Q) and hairpin cotter (W).

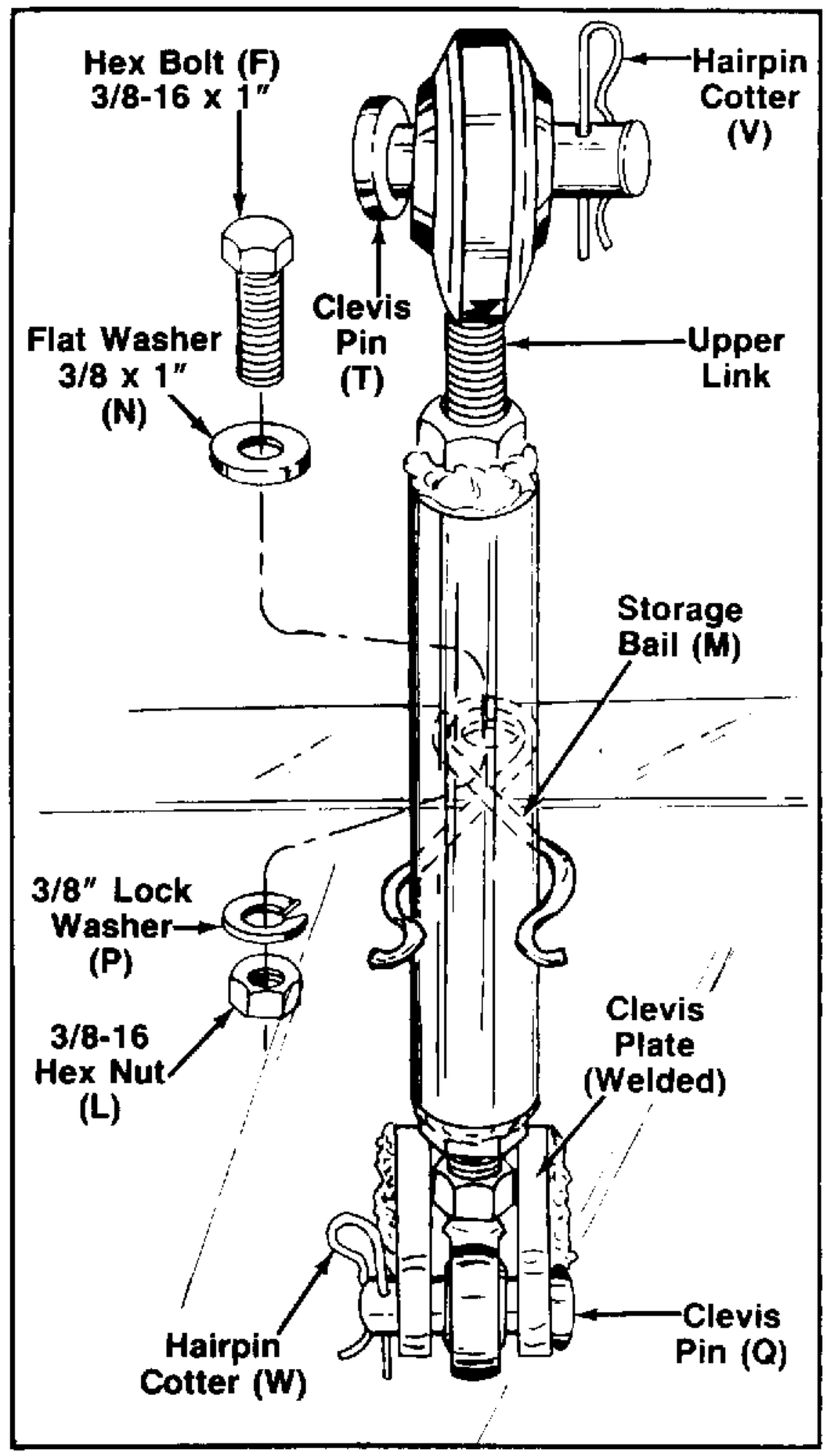

FIGURE 37.

50. Assemble the sway limiter spring (AA) to each lower link. See figure 38.

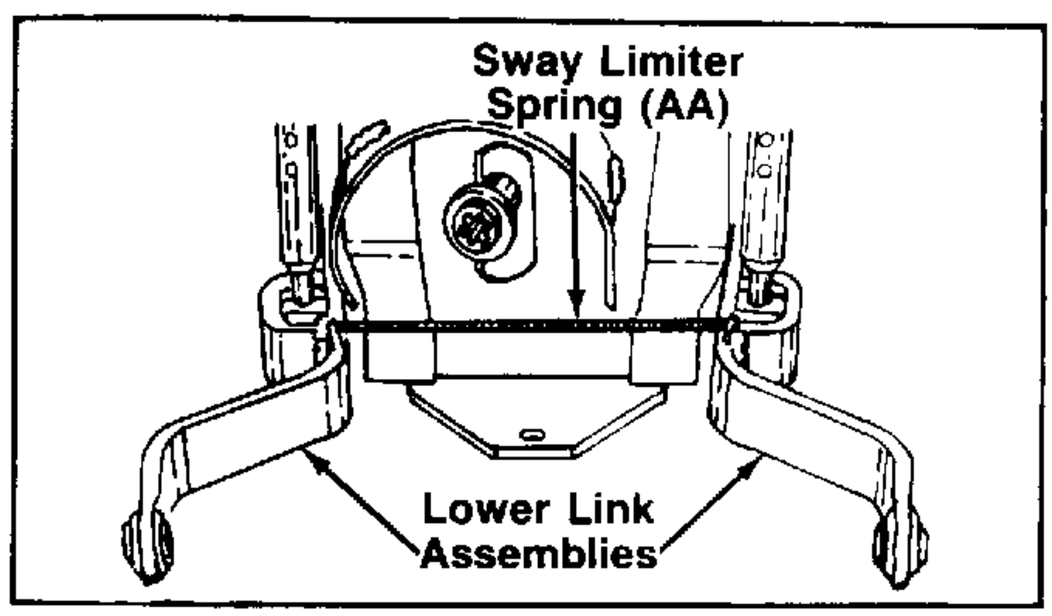

FIGURE 38.

51. Install clevis pin (T) and hairpin cotter (V) as shown in figure 37, to be used with attachments.

52. Reinstall fuel tank (Model 1572 Only). **CAUTION: YOU MUST CHECK TO SEE THAT SAFETY WIRES ON ROLL PINS IN REAR P.T.O. SHAFT ASSEMBLY DO NOT INTERFERE WITH THE BOTTOM OF THE FUEL TANK.**

    Attach return fuel line to the bottom front of the fuel tank.

    Reconnect main fuel line to rear valve on bottom of tank.

53. Install seat support (battery tray), fender assembly, seat assembly, cam, cam knob and center cover in reverse order of steps 1 through 20.

54. Connect taillight leads, seat switch and connect rear P.T.O. clutch lead to connectors provided in harness.

55. Install directional switch (AP) in hole in pedestal as shown in figures 39 and 40.

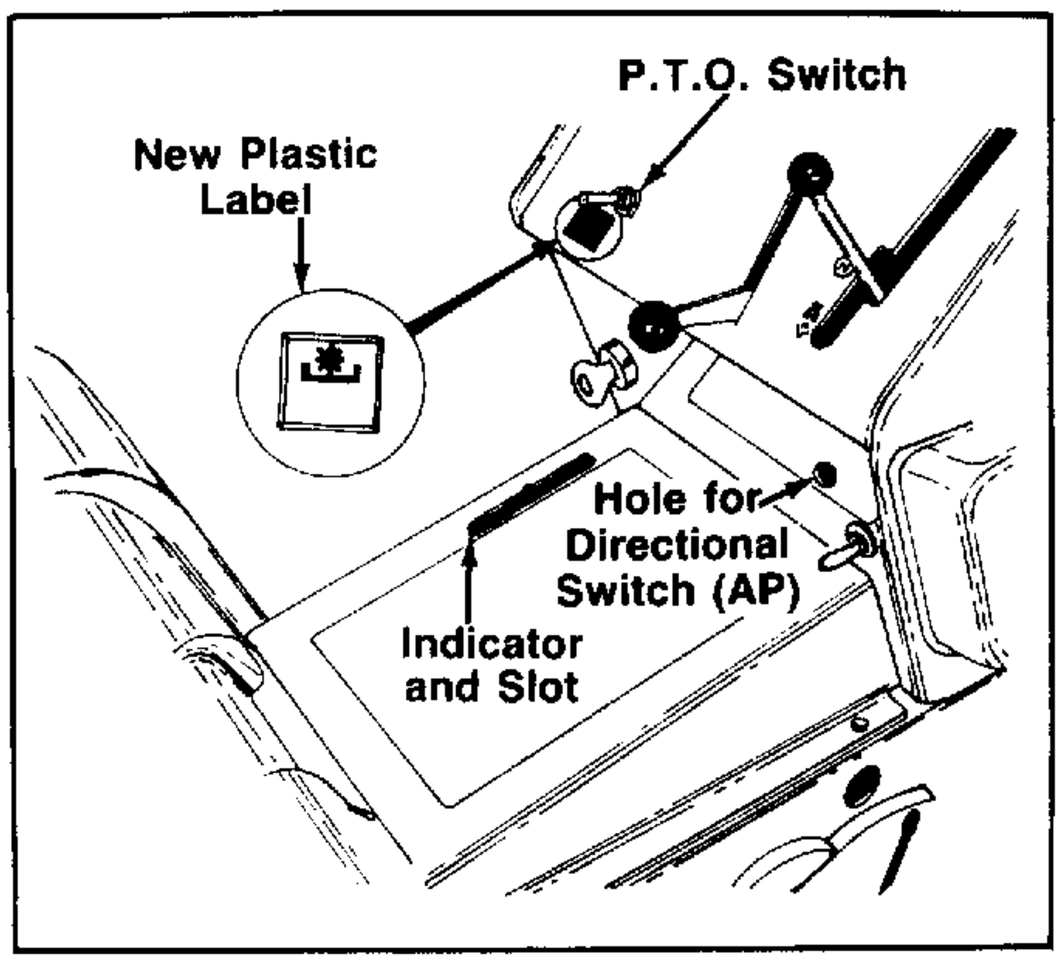

FIGURE 39. (Model 1572 Only)

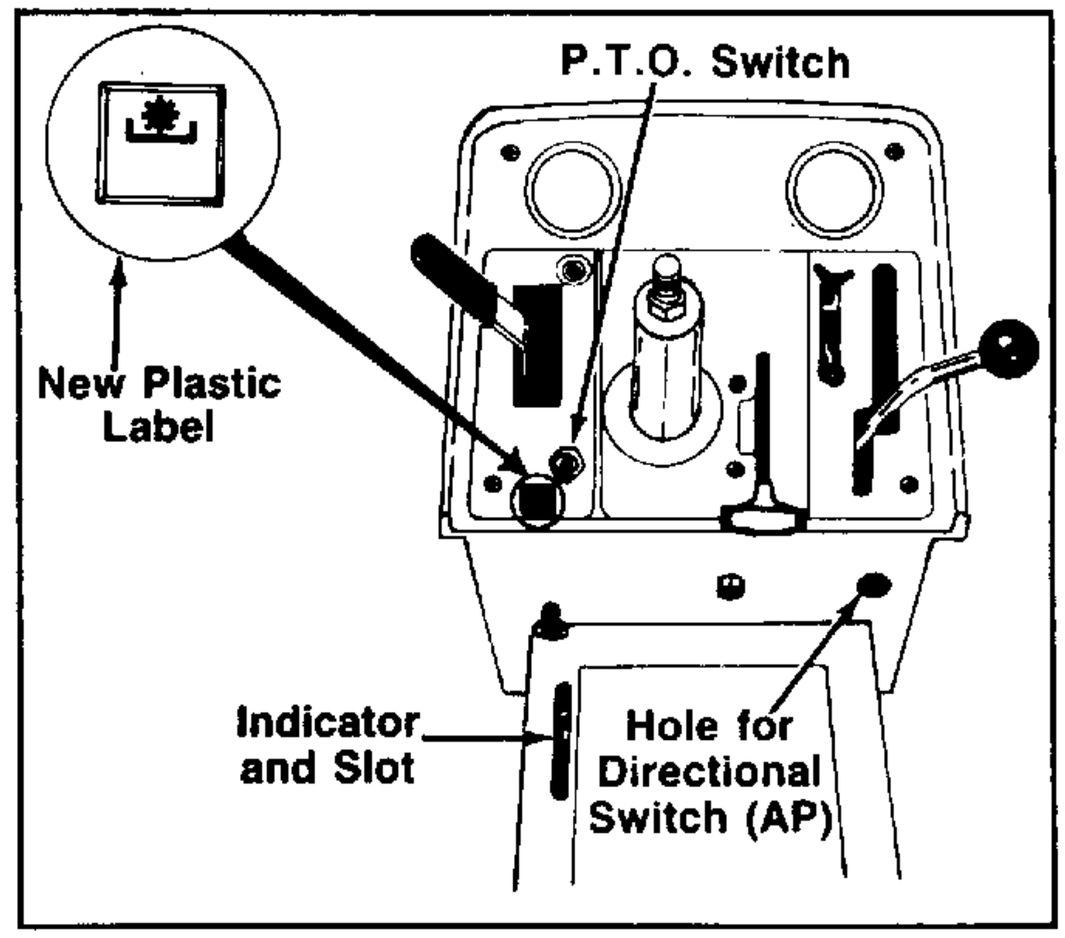

FIGURE 40. (Models 1872 & 2072)

56. Remove jumper lead located in wire harness and plug in wire lead provided in kit to P.T.O. directional switch. See figure 41.

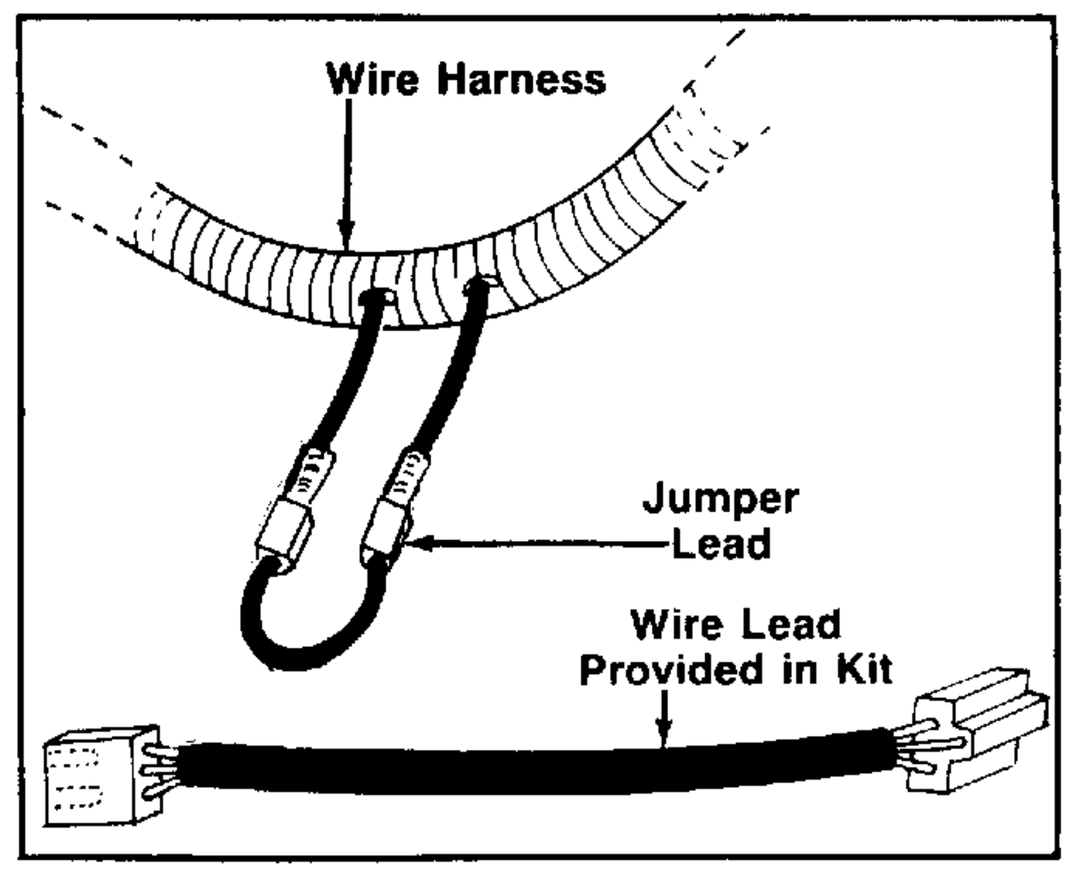

FIGURE 41.

57. Thoroughly clean the instrument panel area where the P.T.O. switch is located and attach new plastic label provided in kit, as shown in figures 39 and 40.

58. Install the appropriate frame cover instruction label over the existing label.

Model No.	Label No.
1872 & 2072	779-3425
1572	779-3426

59. Reinstall the frame cover to the tractor; be sure that lift indicator is through the slot in the cover. See figures 39 and 40.

60. Reinstall the battery. (NOTE: On Models 1572 you must reassemble positive battery cable at this time.)

61. Fill rear axle with Cub Cadet hydraulic transmission fluid to the proper level on the dipstick.

62. Lubricate rockshaft with 251 HEP grease or equivalent No. 2 multi-purpose lithium grease.

ADJUSTING LIFT LINKS AND UPPER LINK

The lift links are adjustable to obtain the desired position of the lift links relative to one another. To adjust lift links, loosen jam nuts, insert around bar in hole in the lift link tube and turn the lift link tube clockwise to lengthen the link or counterclockwise to shorten.

When the desired length has been obtained, tighten jam nuts. See figure 42.

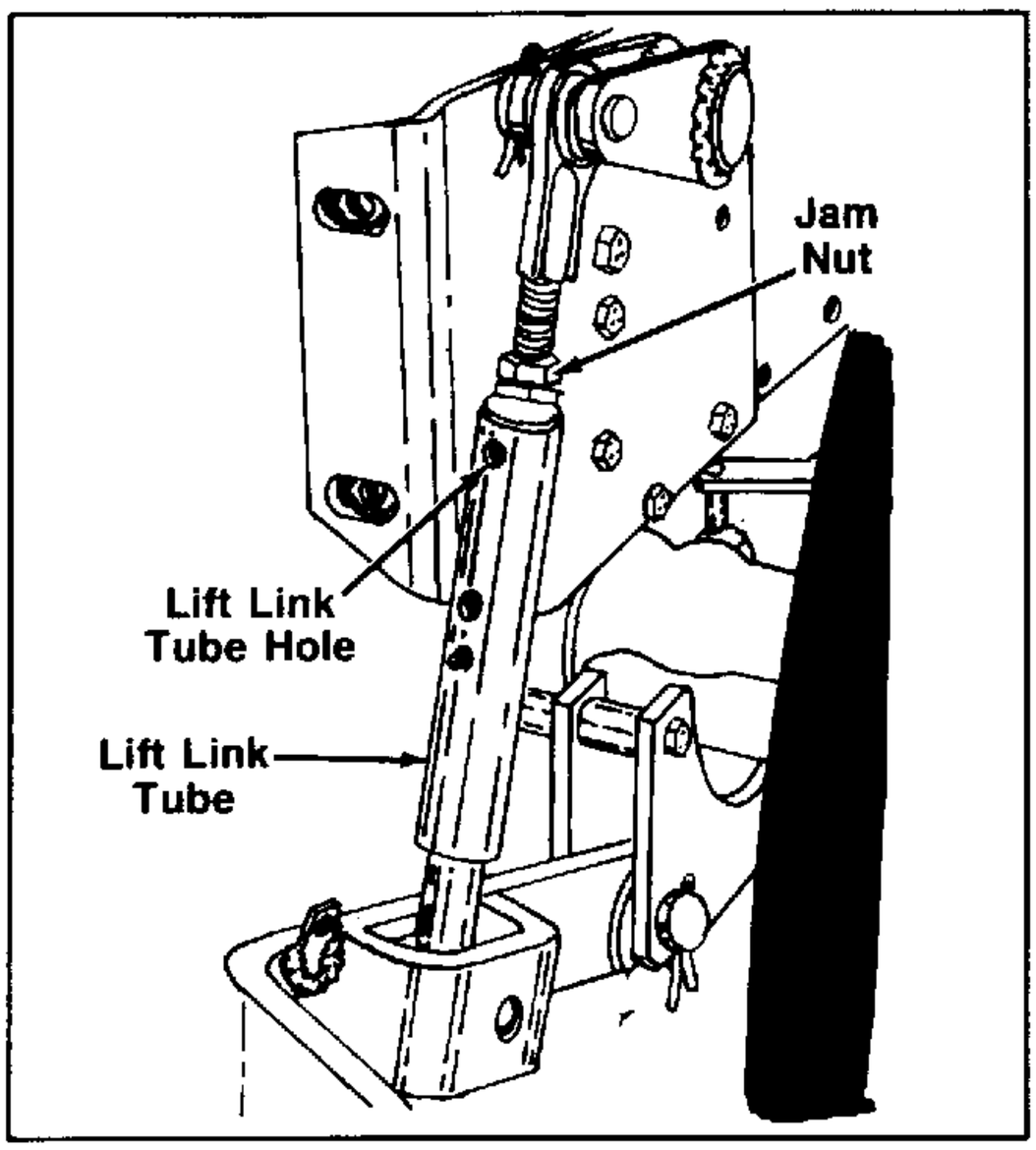

FIGURE 42.

The upper link is adjustable to provide a way to level an implement. Turn upper link ball counterclockwise to shorten the link or clockwise to lengthen the link. When the hitch is not in use the upper link should be placed in the storage bail. See figure 37.

FRONT P.T.O. TROUBLE SHOOTING PROCEDURES
1210, 1810, 1811 and 1812

1.) P.T.O. does not engage

Note: This test should be performed with the engine off.

A.) With key switch on, check for current at terminal five (5) of the P.T.O. switch. White wire. If okay, go to step B.

B.) Move P.T.O. switch to start position. Should have current at terminals 3, 4, and 5. These terminals are internally connected in the P.T.O. switch when switch is moved to the start position. If you do not have current at terminals 3 or 4, the P.T.O. switch is bad and should be replaced. If okay go to step C.

C.) With P.T.O. switch still in the start position, check for current at the P.T.O. clutch, black wire. If you're not getting current from the black wire to the P.T.O. clutch, you have a break in the wire or a poor connection. If okay, go to step D.

D.) Check P.T.O. clutch air gap. Air gap should be .017. If okay, go to step E.

E.) Follow evaluating instructions for checking condition of P.T.O. clutch.

2.) P.T.O. engages but does not stay engaged. Engine continues to run. P.T.O. switch in run position.

Note: This test should be performed with the engine off.

A.) Check P.T.O. air gap. Air gap should be .017.

B.) With P.T.O. in start position check for current at pin 4 of the P.T.O. switch. Brown wire. If not sensing current replace the P.T.O. switch. If okay, go to step C.

C.) With the P.T.O. switch in the start position, check for current at the common terminal on the reverse switch. The switch is normally closed and current should flow from the common terminal to the N.C. terminal or vice versa.

If current is not flowing across the reverse switch, the switch is bad. Brown wires. If okay go to step D.

D.) With P.T.O. switch in start position, check for current at terminal 2 of the reverse relay. Brown wire.

If not sensing current there, the wire or connections between the reverse switch and the reverse relay are bad.

If you are sensing current there, the reverse relay is bad and should be replaced.

3.) Engine stops when engaging P.T.O.

Note: This test should be performed with the engine off.

A.) The operator must be sitting on the seat. The seat switch is a normally closed switch and when operator is in seat the switch is open.

B.) Check tractor seat switch; when operator sits on the seat you should have infinite resistance to current flow when checking with a multimeter.

C.) If the seat switch is closed, when operator is sitting in the seat, the unit has the wrong seat switch or the switch is bad. Black wire.

4.) **P.T.O.does not engage when hot.**

Note: This test should be performed with the engine off.

A.) Follow the procedures outlined in GT series clutches.

5.) P.T.O. Engaged. Operator leaves seat. Engine continues to run.

Note: This test should be performed with the engine off.

A.) Check seat switch as outlined in step 3.

B.) Check for current at seat relay terminal 2, with operator off of seat. If sensing current and engine is still running, replace the seat relay.

Instructions for Evaluating GT Series Clutches

GT 5209-41	Cub P/N 717-3044
GT 5209-42	Cub P/N 717-3043

MEASURE CLUTCH COIL RESISTANCE

STEP 1.

1. Turn engine and PTO switch off.
2. Disconnect clutch wire connection.
3. Select meter to check ohms.
4. Connect one meter lead wire to the clutch wire. See figure 1.
5. Connect the other meter lead wire to a non-painted metal surface. See figure 2.
6. If meter reads below 2.40 ohms or above 3.40 ohms, then the clutch has failed and needs to be replaced.

   If meter reads between 2.40 and 3.40 ohms, proceed to step 2.

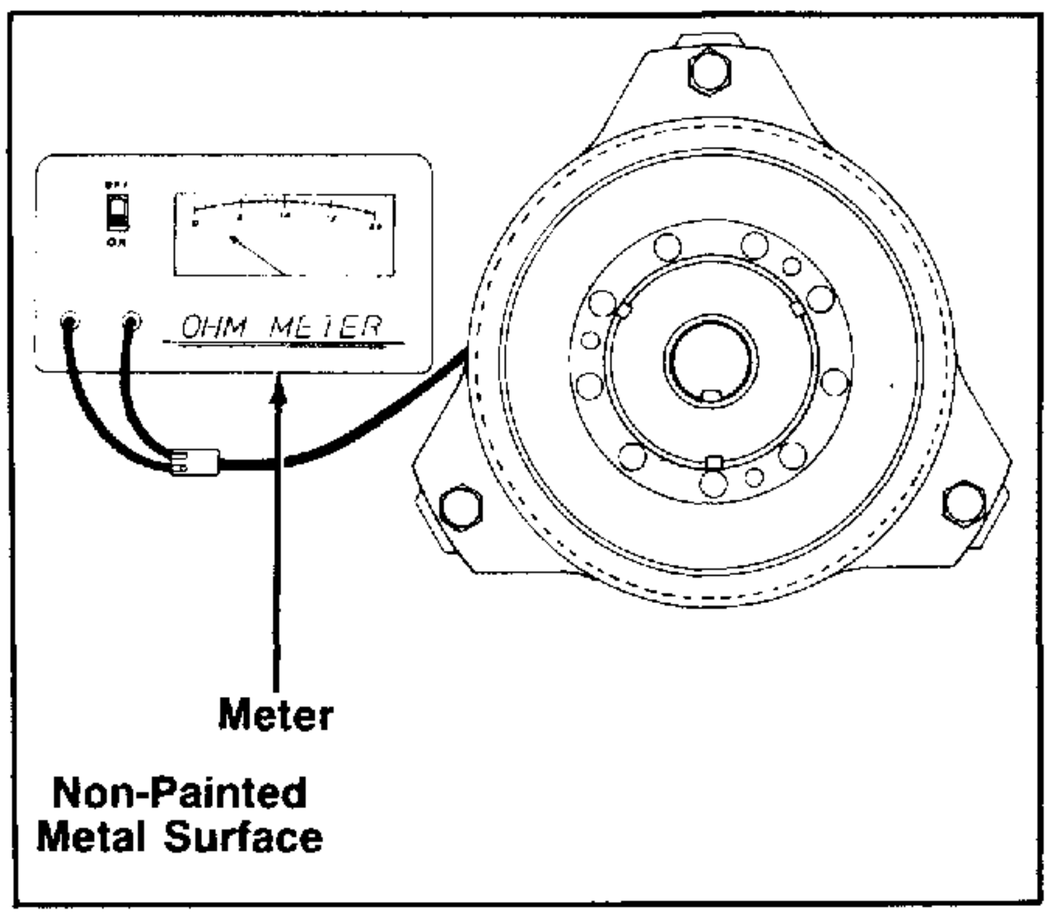

FIGURE 1.

MEASURE CLUTCH CURRENT DRAW

STEP 2

1. Turn engine off.
2. Disconnect clutch wire connection.
3. Select meter to check amps (10 amp scale)
4. Connect one meter lead wire to the clutch wire. See figure 2.
5. Connect the other meter lead wire to the disconnected wire leading to the power source. See figure 2.
6. Turn P.T.O. switch on.
7. If meter reads below 3.5 amps, the problem would be in the electrical system leading to the clutch (battery, relay, switch, etc.).

   If meter reads 3.5 amps or above, proceed to step 3.

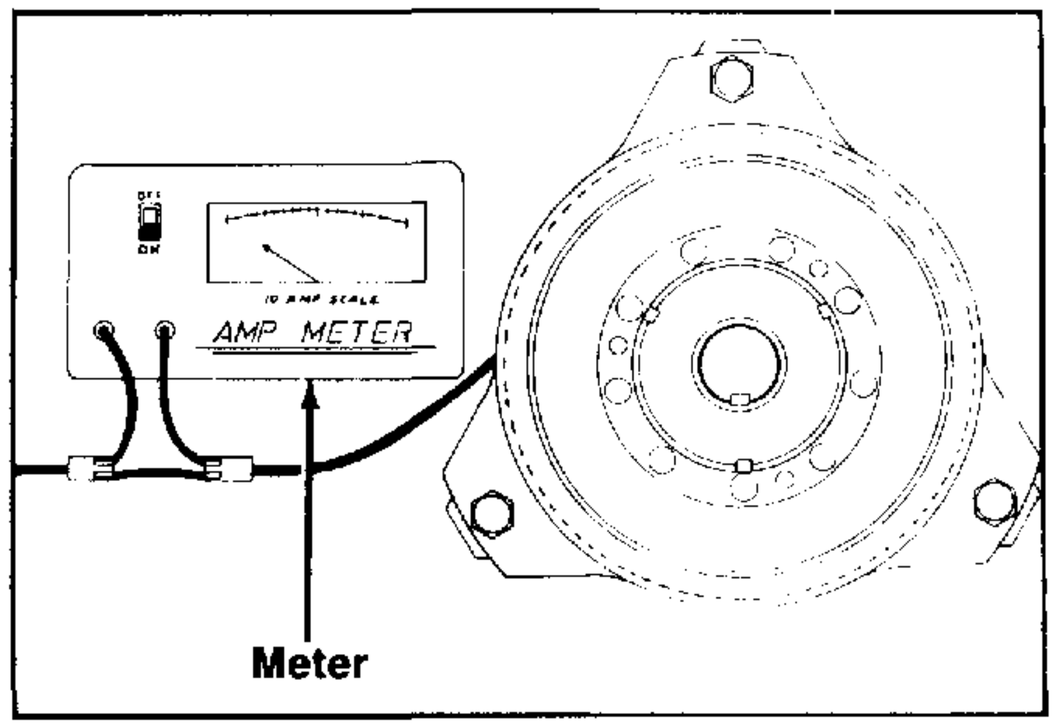

FIGURE 2.

BURNISHING PROCEDURE FOR ELECTRIC CLUTCH/BRAKE

To be performed after tractor is completely assembled.

1. Run at 50% throttle.
2. Engage and disengage the clutch 5 times. (10 seconds on / 10 seconds off)
3. Increase to 75% throttle.
4. Engage and disengage the clutch 5 times. (10 seconds on / 10 seconds off)

CHECK AIR GAP SETTING

STEP 3

1. Turn engine and P.T.O. switch off.
2. Locate the three "windows" or "notches" where the air gap is checked. See figure 3.
3. With feeler gauge, check gap at all three locations (minimum of two).
4. Factory air gap setting is .010"-.025".
5. If gap doesn't fall between .010"-.025" then reset using a .017" feeler gauge.

   Changing the air gap is achieved by tightening and/or loosening the three nuts.

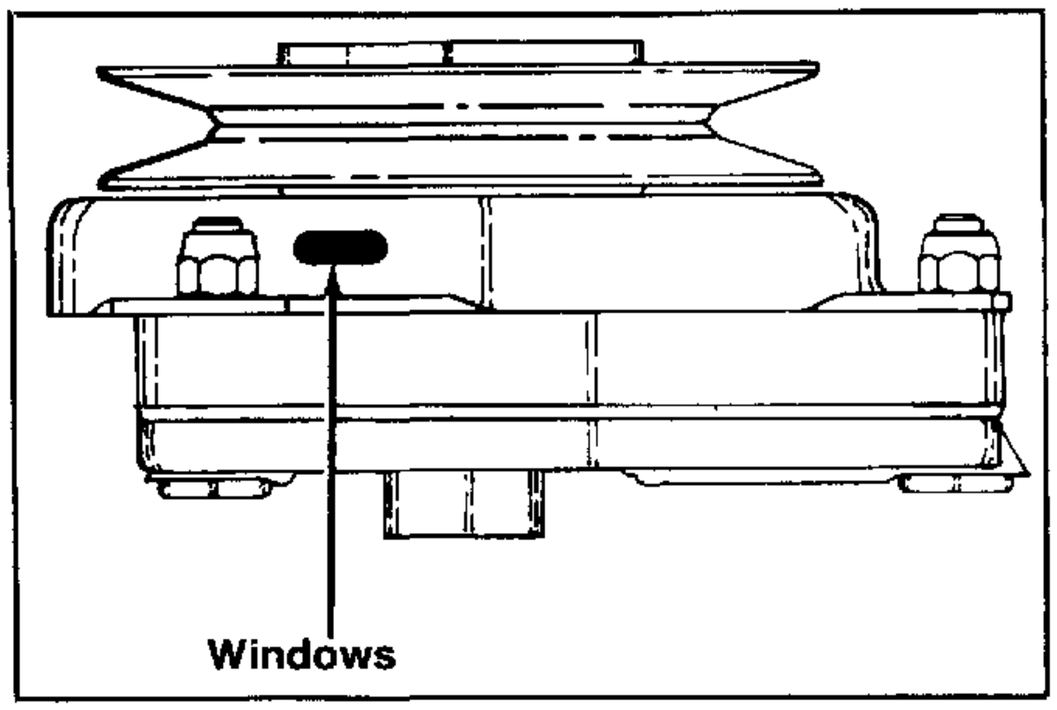

FIGURE 3.

If you find after completing steps 1, 2 and 3 that:

1. The resistance falls between 2.40 and 3.40
2. The amp draw is 3.50 or above
3. The air gap is between .010″-.025″ or reset to .017″

then the electric clutch is within factory specifications and is not the source of the problem.

TRACTOR SERVICE MANUAL FOR GARDEN TRACTORS
S/N 737,625 - 799,999

SECTION 1. ENGINE

SECTION 2. CHASSIS

SECTION 3. DRIVE SYSTEMS AND HYDRAULICS

SECTION 4. ATTACHMENTS

SECTION 5. SAFETY

SECTION 5

SAFETY AND GENERAL INFORMATION

WORK SAFELY—FOLLOW THESE RULES

This symbol is used to call your attention to instructions concerning your personal safety. Be sure to observe and follow these instructions.

1. To prevent accidental starting, always pull the high tension wire(s) off of the spark plug(s) before servicing and/or adjusting the machine.
2. To prevent injury, do not allow children or bystanders around the machine while it is being adjusted and/or serviced.
3. Do not wear rings, wrist watches or loose fitting clothing when working on machinery, they could catch on moving parts causing serious injury. Wear sturdy, rough-soled work shoes. Never adjust and/or service a machine in bare feet, sandals or sneakers.
4. Always wear safety glasses when using a hammer, chisel or other tools that may cause chips to fly.
5. Be sure to reinstall safety devices, guards or shields after adjusting and/or servicing the machine.
6. When operating a power washer to clean a machine before servicing, be careful at all times to avoid injury. Maintain proper footing and balance at all times. Never direct the spray at people or animals, as high pressure spray can cause serious injury.
7. If a portable heater is used to heat the service area, the following precautions must be observed:
   (a) Do not use portable heaters in presence of volatile materials such as gasoline or paint, as fire or explosion may result.
   (b) To avoid being burned, do not touch the heater during operation.
   (c) Portable heaters consume oxygen and combustion fumes can be hazardous. Heater should be used only in a well ventilated area. Keep a window or door partially open to provide ventilation.
   (d) Keep the heater at least four (4) feet from combustible materials.
   (e) Never use gasoline as fuel.
8. Handle gasoline with care—it is highly flammable:
   (a) Use approved gasoline container.
   (b) Never remove the fuel tank cap or fill the fuel tank when the engine is running, is hot, or indoors. Also, do not smoke when working around flammable fuel.
   (c) Avoid fires—be sure container or funnel does not touch the battery. Do not overfill the fuel tank. Wipe up spilled gasoline.
   (d) Replace fuel tank cap securely.
9. Never use trouble lights or electric powered tools that have cut and/or damaged cords or plugs. Be sure all electric tools are properly grounded.
10. Never run an engine in a confined area such as a garage or storage building any longer than is necessary for immediate moving of the machine out of or into the area. EXHAUST GASES ARE TOXIC. OPENING DOORS AND WINDOWS MAY NOT PROVIDE ADEQUATE VENTILATION.
11. After servicing, be sure all tools, parts, or servicing equipment are removed from the machine.
12. Electrical storage batteries give off highly inflammable hydrogen gas when charging and continue to do so for some time after receiving a steady charge. Do not under any circumstances allow an electric spark or an open flame near the battery. Always disconnect a battery cable before working on the electrical system.
13. Hydraulic fluid escaping under pressure can have enough force to penetrate the skin. Hydraulic fluid may also infect a minor cut or opening in the skin. If injured by escaping fluid, see a doctor at once. Serious infection or reaction can result if medical treatment is not given immediately.

    Do not attempt to repair or tighten hoses that are under pressure, when the boom is raised, or with the tractor engine running. Cycle all hydraulic control valves to relieve all pressure before disconnecting the lines or performing other work on the hydraulic system. Make sure all connections are tight and hoses and lines are in good condition before applying pressure to the system. To locate a leak under pressure, use a small piece of cardboard or wood. Never use hands.
14. When using an acetylene torch, always wear welding goggles and gloves. Keep a "charged" fire extinguisher within reach. Do not weld or heat areas near fuel tanks or fuel lines and utilize proper shielding around hydraulic lines.
15. Always use safety stands in conjunction with hydraulic jacks or hoists. Do not rely on the jack or hoist to carry the load, they could fail. Always use a safety bar to block hydraulic cylinders.
16. When splitting tractors, or disassembling machines, be sure to use safety stands and adequate supports to prevent tipping or rollover.
17. Use a safety catch on all hoist hooks. Do not take a chance, the load could slip off of the hook.

18. Use pullers to remove bearings, bushings, gears, cylinder sleeves, etc. when applicable. Use hammers, punches and chisels only when absolutely necessary. Then, be sure to wear safety glasses.
19. Be careful when using compressed air to dry parts. Use approved air blow guns, do not exceed 30 psi, wear safety glasses or goggles and use proper shielding to protect everyone in the work area.

IMPORTANT: The above is only a partial list of safe work rules. In addition, always refer to the Operator's Manual for the specific machine for additional safe work rules regarding the machine operation.

CONVERSION TABLE
—inches to millimeters—

Inches	Millimeters	Inches	Millimeters	Inches	Millimeters	Inches	Millimeters
1	25.4	26	660.4	51	1295.4	76	1930.4
2	50.8	27	685.8	52	1320.8	77	1955.8
3	76.2	28	711.2	53	1346.2	78	1981.2
4	101.6	29	736.6	54	1371.6	79	2006.6
5	127.0	30	762.0	55	1397.0	80	2032.0
6	152.4	31	787.4	56	1422.4	81	2057.4
7	177.8	32	812.8	57	1447.8	82	2082.8
8	203.2	33	838.2	58	1473.2	83	2108.2
9	228.6	34	863.6	59	1498.6	84	2133.6
10	254.0	35	889.0	60	1524.0	85	2159.0
11	279.4	36	914.4	61	1549.4	86	2184.4
12	304.8	37	939.8	62	1574.8	87	2209.8
13	330.2	38	965.2	63	1600.2	88	2235.2
14	355.6	39	990.6	64	1625.6	89	2260.6
15	381.0	40	1016.0	65	1651.0	90	2286.0
16	406.4	41	1041.4	66	1676.4	91	2311.4
17	431.8	42	1066.8	67	1701.8	92	2336.8
18	457.2	43	1092.2	68	1727.2	93	2362.2
19	482.6	44	1117.6	69	1752.6	94	2387.6
20	508.0	45	1143.0	70	1778.0	95	2413.0
21	533.4	46	1168.4	71	1803.4	96	2438.4
22	558.8	47	1193.8	72	1828.8	97	2463.8
23	584.2	48	1219.2	73	1854.2	98	2489.2
24	609.6	49	1244.6	74	1879.6	99	2514.6
25	635.0	50	1270.0	75	1905.0	100	2540.0

1 inch = 25.4 millimeters

To convert inches to millimeters, the inch value to be converted should be written down, carried to as many decimal places as the desired accuracy requires. It should then be split into groups of not more than two figures each. The equivalent of each group should then be taken from the table, proper regard being given to the position of the decimal point in each case, and the equivalent of the inch value given.

For example, to convert 2.4635 inches to millimeters:

2.0000 inches = 50.80000 millimeters
.4600 inches = 11.68400
.0035 inches = .08890
2.4635 inches = 62.57290 millimeters
Correct to 3 decimal places.
2.4635 inches = 62.573 millimeters

CONVERSION TABLE
—millimeters to inches—

Millimeters	Inches	Millimeters	Inches	Millimeters	Inches	Millimeters	Inches
1	0.03937008	26	1.0236220	51	2.0078740	76	2.9921260
2	0.07874016	27	1.0629921	52	2.0472441	77	3.0314961
3	.11811024	28	1.1023622	53	2.0866142	78	2.0708661
4	.15748031	29	1.1417323	54	2.1259842	79	3.1102362
5	1.9685039	30	1.1811024	55	2.1653543	80	3.1496063
6	.23622047	31	1.2204724	56	2.2047244	81	3.1889764
7	.27559055	32	1.2598425	57	2.2440945	82	3.2283465
8	.31496063	33	1.2992126	58	2.2834646	83	3.2677165
9	.35433071	34	1.3385827	59	2.3228346	84	3.3070866
10	.3937008	35	1.3779528	60	2.3622047	85	3.3464567
11	.4330709	36	1.4173228	61	2.4015748	86	3.3858268
12	.4724409	37	1.4566929	62	2.4409449	87	3.4251968
13	.5118110	38	1.4960630	63	2.4803150	88	3.4645669
14	.5511811	39	1.5354331	64	2.5196850	89	3.5039370
15	.5905512	40	1.5748031	65	2.5590551	90	3.5433071
16	.6299213	41	1.6141732	66	2.5984252	91	3.5826772
17	.6692913	42	1.6535433	67	2.6377953	92	3.6220472
18	.7086614	43	1.6929134	68	2.6771654	93	3.6614173
19	.7480315	44	1.7322835	69	2.7165354	94	3.7007874
20	.7874016	45	1.7716535	70	2.7559055	95	3.7401575
21	.8267717	46	1.8110236	71	2.7952756	96	3.7795276
22	.8661417	47	1.8503937	72	2.8346457	97	3.8188976
23	.9055118	48	1.8897638	73	2.8740157	98	3.8582677
24	.9448819	49	1.9291339	74	2.9133858	99	3.8976378
25	.9842520	50	1.9685039	75	2.9527559	100	3.937008

1 mm = .03937008 inches

To convert millimeters to inches, the millimeter value to be converted should be written down, carried to as many decimal places as the desired accuracy requires. It should then be split into groups of not more than two figures each. The equivalent of each group should then be taken from the table, proper regard being given to the position of the decimal point in each case, and the equivalent of the several groups found by addition. This sum will be the inch equivalent of the millimeter value given.

For example, to convert 75.384 millimeters to inches:

75.000 millimeters = 2.9527559 inches
.380 millimeters = .0149606
.004 millimeters = .0001574
75.384 millimeters = 2.9678739 inches
Correct to 5 decimal places.
75.384 millimeters = 2.96787 inches

STANDARD TORQUE DATA FOR INCH NUTS AND BOLTS— FOOT POUNDS

Recommended torque for all Standard Unplated Nuts and Bolts, provided:

A. Surface finish is oxide coated, oil quenched or bright.

B. All thread surfaces are clean and lubricated with SAE-30 engine oil or equivalent. (See NOTE.)

C. Joints are rigid, that is, no gaskets or compressible materials are used.

D. When reusing nuts or bolts, use minimum torque values.

NOTE: Multiply the standard torque by:
.65 when finished jam nuts are used.
.70 when Molykote, white lead or similar mixtures are used as lubricants.
.75 when phosphate coated and oiled bolts or nuts are used.
.85 when cadmium or zinc dichromate bolts or nuts are used.
.90 when hardened surfaces are used under the nut or bolt head (this applies to standard unplated hardware only)

1 FOOT POUND = 1.355 NEWTON METERS

Bolt or Stud Diameter	Type 1 Studs Only		Type 1 Bolts 6″ length or less		Type 1 Bolts longer than 6″		Type 5 (all lengths)		Type 8 (all lengths) Only when used† in cast (gray) iron		Type 8 (all lengths) All other applications	
Inches	Min.	Max.	Min.	Max.	Min.	Max.	Min.	Max.	Min.	Max.	Min.	Max.
1/4	5	6	6	7	4	4	9	10	11	13	13	14
5/16	12	13	11	13	7	8	18	20	22	25	25	28
3/8	21	24	21	24	13	14	33	37	41	46	45	50
7/16	35	38	35	38	20	23	53	60	65	74	75	85
1/2	52	58	52	59	31	35	80	90	100	112	115	130
9/16	70	80	75	85	45	51	115	130	145	160	165	185
5/8	98	110	104	117	62	70	160	180	200	225	225	255
3/4	174	195	185	205	110	125	285	320	355	400	400	450
7/8	280	315	180	200	180	200	460	575	570	640	645	725
1	420	470	265	300	265	300	685	720	855	960	970	1090
1-1/8	595	670	380	425	380	425	850	950	1210	1360	1375	1545
1-1/4	840	945	535	600	535	600	1200	1350	1705	1920	1940	2180
1-3/8	1100	1240	700	785	700	785	1570	1760	2235	2515	2540	2860
1-1/2	1470	1640	925	1045	925	1045	2080	2340	2970	3340	3375	3795

†When bolt penetration is 1-1/2 times the diameter of the bolt.

BOLT TYPE IDENTIFICATION CHART

S.A.E. GRADE	DESCRIPTION	BOLT HEAD MARKING*
Equivalent 1 or 2	WILL BE BLANK IN THE CENTER OF THE HEAD Low or Medium Carbon Steel Not Heat Treated	
5	WILL HAVE 3 RADIAL LINES Quenched and Tempered Medium Carbon Steel	
8	WILL HAVE 6 RADIAL LINES Quenched and Tempered Special Carbon or Alloy Steel	

*The center marking identifies the bolt manufacturer.

STANDARD TORQUE DATA FOR INCH NUTS AND BOLTS— NEWTON METERS

Recommended torque for all Standard Unplated Nuts and Bolts, provided:

A. Surface finish is oxide coated, oil quenched or bright.

B. All thread surfaces are clean and lubricated with SAE-30 engine oil or equivalent. (See NOTE.)

C. Joints are rigid, that is, no gaskets or compressible materials are used.

D. When reusing nuts or bolts, use minimum torque values.

NOTE: Multiply the standard torque by:
.65 when finished jam nuts are used.
.70 when Molykote, white lead or similar mixtures are used as lubricants.
.75 when phosphate coated and oiled bolts or nuts are used.
.85 when cadmium or zinc dichromate bolts or nuts are used.
.90 when hardened surfaces are used under the nut or bolt head (this applies to standard unplated hardware only)

1 NEWTON METER = 0.738 FOOT POUND

Bolt or Stud Diameter	Type 1 Studs Only		Type 1 Bolts 6" length or less		Type 1 Bolts longer than 6"		Type 5 (all lengths)		Type 8 (all lengths) Only when used† in cast (gray) iron		Type 8 (all lengths) All other applications	
Inches	Min.	Max.	Min.	Max.	Min.	Max.	Min.	Max.	Min.	Max.	Min.	Max.
1/4	7	8	8	9	5	5	12	14	15	18	18	19
5/16	16	18	15	18	9	11	24	27	30	34	34	38
3/8	28	33	28	33	18	19	45	50	56	62	61	68
7/16	47	52	47	52	27	31	72	81	88	100	102	115
1/2	71	79	71	80	42	47	109	122	136	152	156	176
9/16	95	109	102	115	61	69	156	176	197	217	224	251
5/8	133	149	141	159	84	95	217	244	271	305	305	346
3/4	236	265	251	278	149	170	387	434	482	543	543	611
7/8	380	427	244	271	244	271	624	780	773	868	875	984
1	570	638	360	407	360	407	929	977	1160	1303	1316	1479
1-1/8	807	909	516	577	516	577	1153	1289	1642	1845	1866	2096
1-1/4	1140	1282	726	814	726	814	1628	1832	2313	2605	2632	2958
1-3/8	1492	1682	950	1065	950	1065	2130	2388	3033	3412	3446	3881
1-1/2	1995	2225	1255	1418	1255	1418	2822	3175	4030	4532	4579	5149

†When bolt penetration is 1-1/2 times the diameter of the bolt.

BOLT TYPE IDENTIFICATION CHART

S.A.E. GRADE	DESCRIPTION	BOLT HEAD MARKING*
Equivalent 1 or 2	WILL BE BLANK IN THE CENTER OF THE HEAD Low or Medium Carbon Steel Not Heat Treated	
5	WILL HAVE 3 RADIAL LINES Quenched and Tempered Medium Carbon Steel	
8	WILL HAVE 6 RADIAL LINES Quenched and Tempered Special Carbon or Alloy Steel	

*The center marking identifies the bolt manufacturer.

How To Install Bearings With Self-Locking Collar

1. Be sure the shaft is free of rust, paint and nicks before installing bearing.

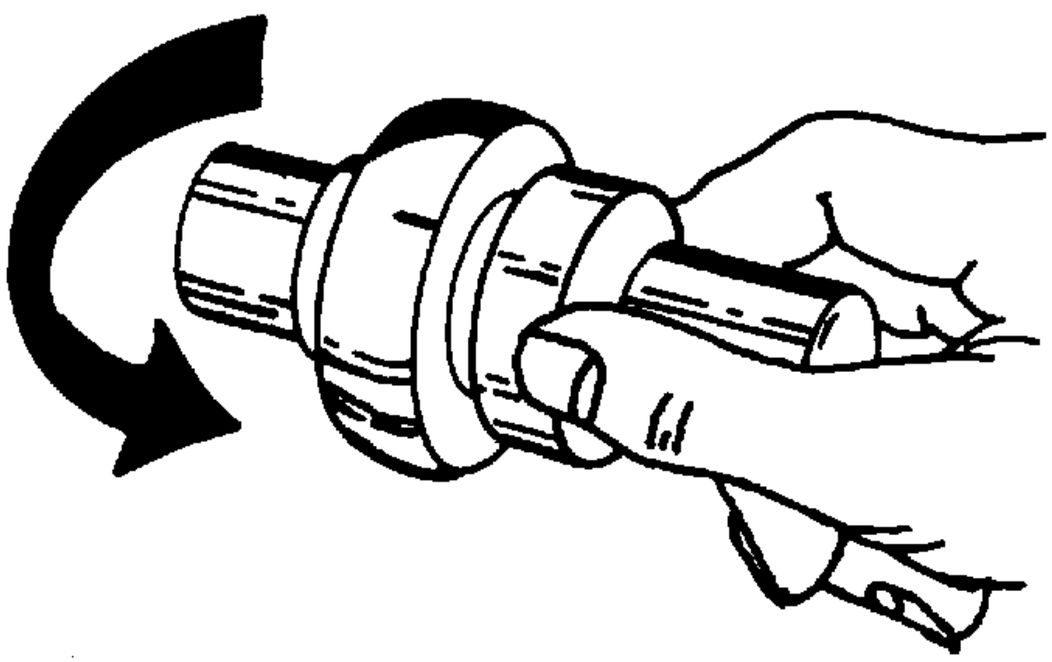

2. Mate cam of collar with cam of bearing inner ring.

3. Shaft must be in operating position and flangettes tightened securely before tightening locking collars.

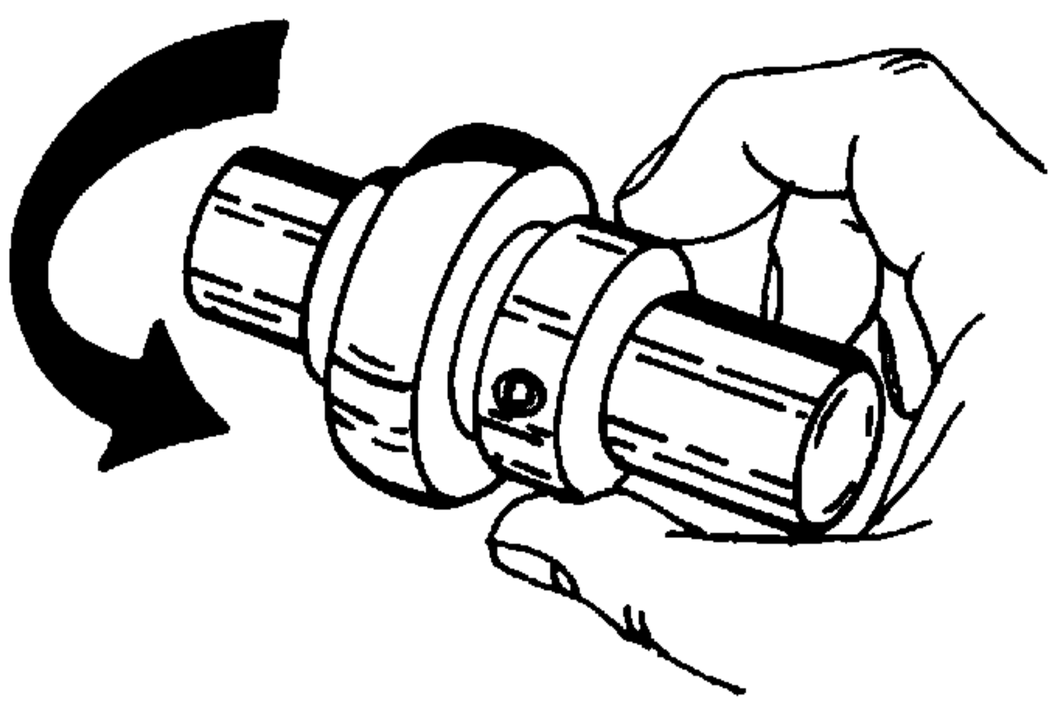

4. Pressing collar lightly against inner ring, turn collar in direction of shaft rotation until engaged.

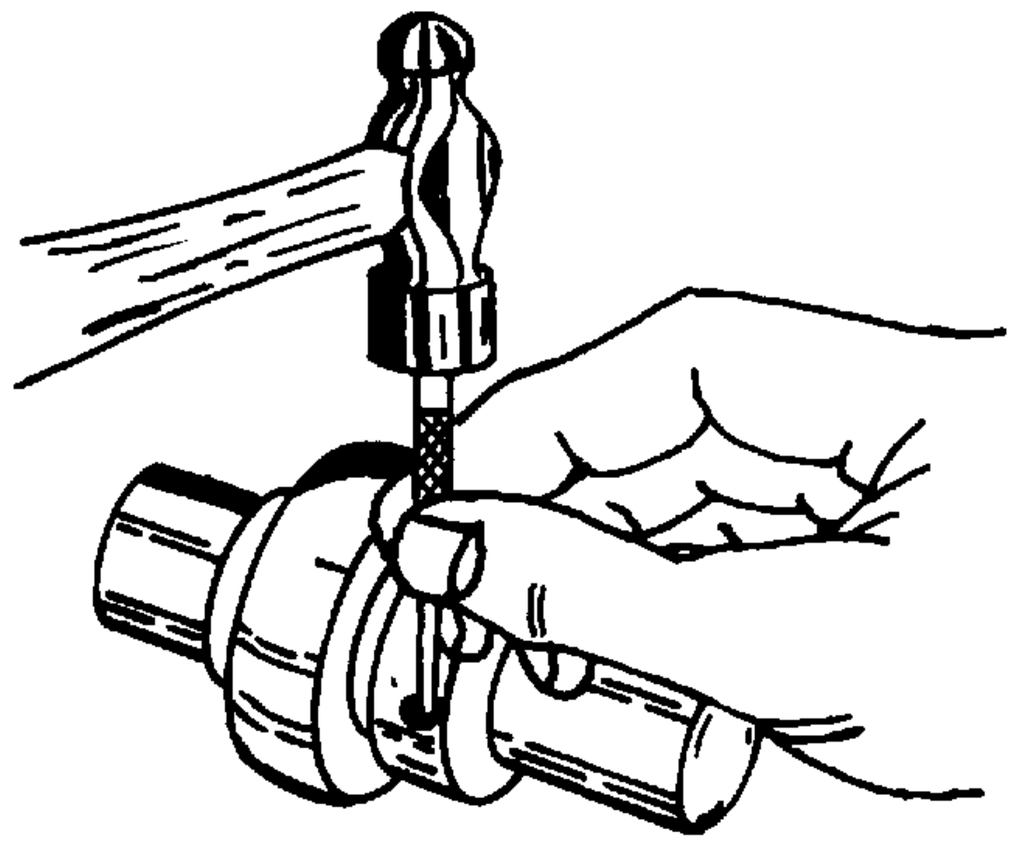

5. With drift pin in collar hole, strike in direction of shaft rotation to lock.

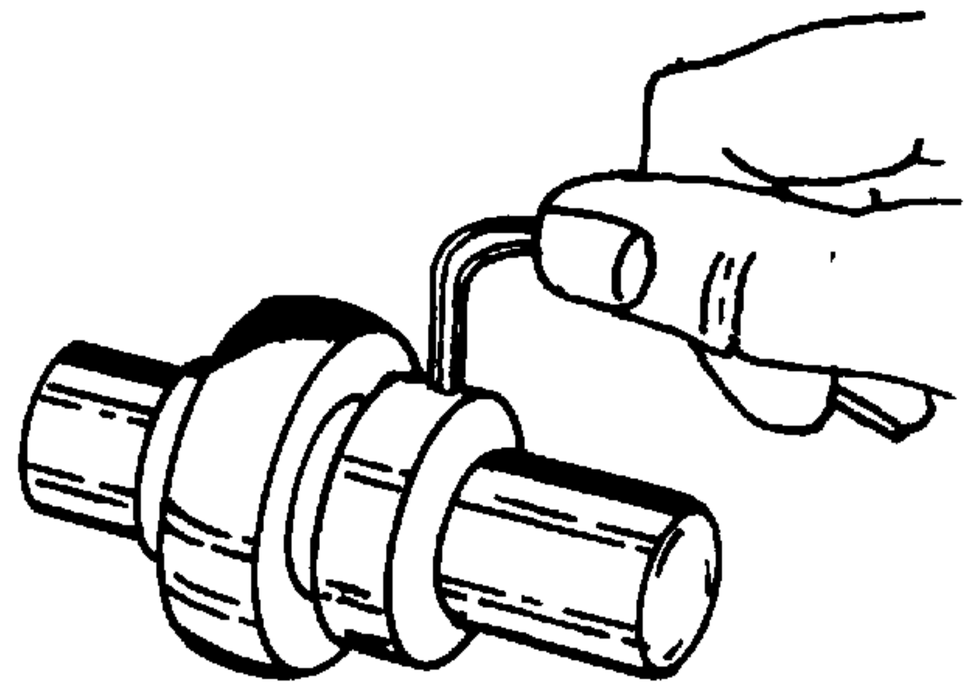

6. Tighten set screw in collar.